STAINLESS STEEL DIAPHRAGM SEAL



Series 5000

Part #	Description
BR-D-5000	¼" NPT x ¼" NPT
BR-D-5001	¼" NPT x ½" NPT
BR-D-5002	½" NPT x ½" NPT

SERIES 5000

FEATURES:

The Series 5000 from Blue Ribbon Corporation are diaphragm seals or isolation devices used to provide economical protection of pressure sensing instrumentation from measured media. The Series is designed with a stainless steel diaphragm for small to medium instrumentation ranging from 30 to 2500 PSI. The Series 5000 provides ultimate protection for gauges and measuring instruments thru 2½" dial sizes in applications where space is at a premium.

TECHNICAL SPECIFICATIONS:

- **Housing:** 316 Stainless Steel
- **Diaphragm:** 316 Stainless Steel
- **Operating Pressure:** 30 to 2500 PSI
- **Instrument:** ¼" NPT
- **Process Connections:** ¼" and ½" NPT
- **Process Temperature:** -49 °F to +302 °F

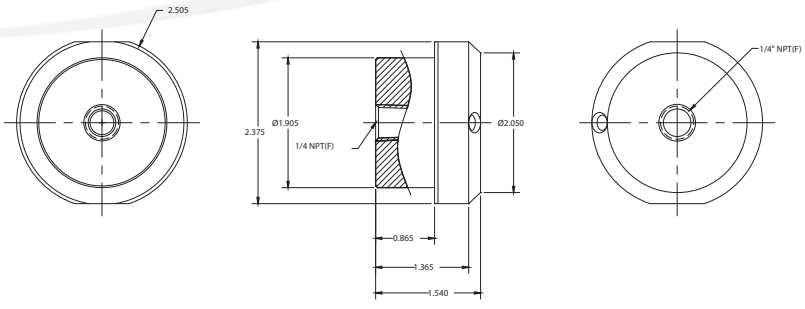

FRONT SIDE BACK

DIAPHRAGM SEAL
316SS
5000 SERIES

© 2015 Blue Ribbon Corp. **Adaptive Industrial Solutions**

sales@adaptiveind.com | (877) 818-5009