SYPHON (PIGTAIL)



BR-SYP

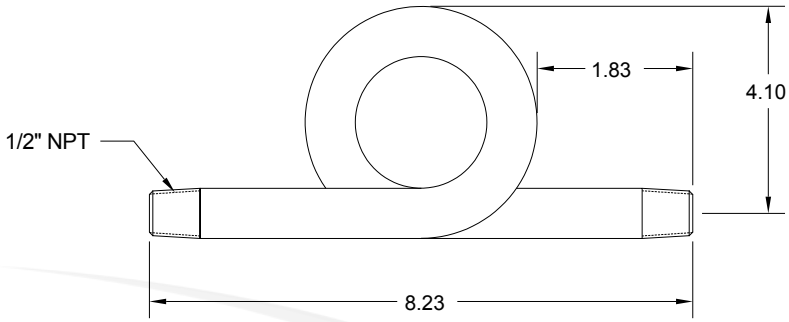

pigtail syphon TUBE
BR-A032
1/2" NPT

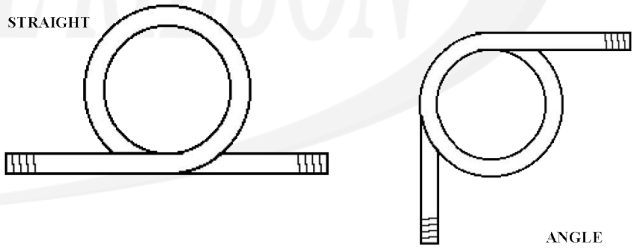

Pigtail Syphons from Blue Ribbon Corporation are typically used to act as a cooling or warming leg for applications where the process temperature may be higher or lower than the "normal" working temperature range, as specified by NIST B40.1, in relation to the instrumentation. Temperature extremes can lead to measurement inaccuracy, or otherwise shorten the life span of instrumentation that is not specifically designed for severe duty applications.

PART #	DESCRIPTION	PRESSURE	TEMP
A03B	¼" NPT Brass Pigtail	250 PSI	+400 °F
A031	¼" NPT Iron Pigtail, Schedule 40 Iron	500 PSI	+400 °F
CPS4	¼" NPT Steel Pigtail, Schedule 80 Steel	1000 PSI	+850 °F
CPS2	½" NPT Steel Pigtail	1000 PSI	+850 °F
CPSS4	¼" NPT Stainless Steel Pigtail	2000 PSI	+1000 °F
CPSS2	½" NPT Stainless Steel Pigtail	2000 PSI	+1000 °F

© 2015 Blue Ribbon Corp. **Adaptive Industrial Solutions**
sales@adaptiveind.com | (877) 818-5009