Temperature Measurement Solutions

NOSHOK



Dial Indicating

Electronic

Industrial RTDs

Thermowells

Accessories

At NOSHOK, we pride ourselves on being innovators in the industry by continually offering the latest technology and measurement solutions, and providing the best customer support in the marketplace.

Established in 1967, NOSHOK was one of the first companies to offer liquid filled pressure gauges. We also took a bold step by backing our quality gauges with an extended 3-year warranty. That unwavering standard of quality has endured for over 50 years, and as we have expanded our product offering we continue to provide industry-leading warranties. NOSHOK also leads the industry as one of the first companies to offer corrosion-resistant zinc nickel plating standard on our carbon steel valves.

We have the capacity to put together special requirements which are so often hard to find. If you do not find what you need in this catalog, chances are we can still put a solution together.

NOSHOK is committed to providing excellence on every level. Thank you for choosing NOSHOK products.

Christian F. L. Cole
CEO/President

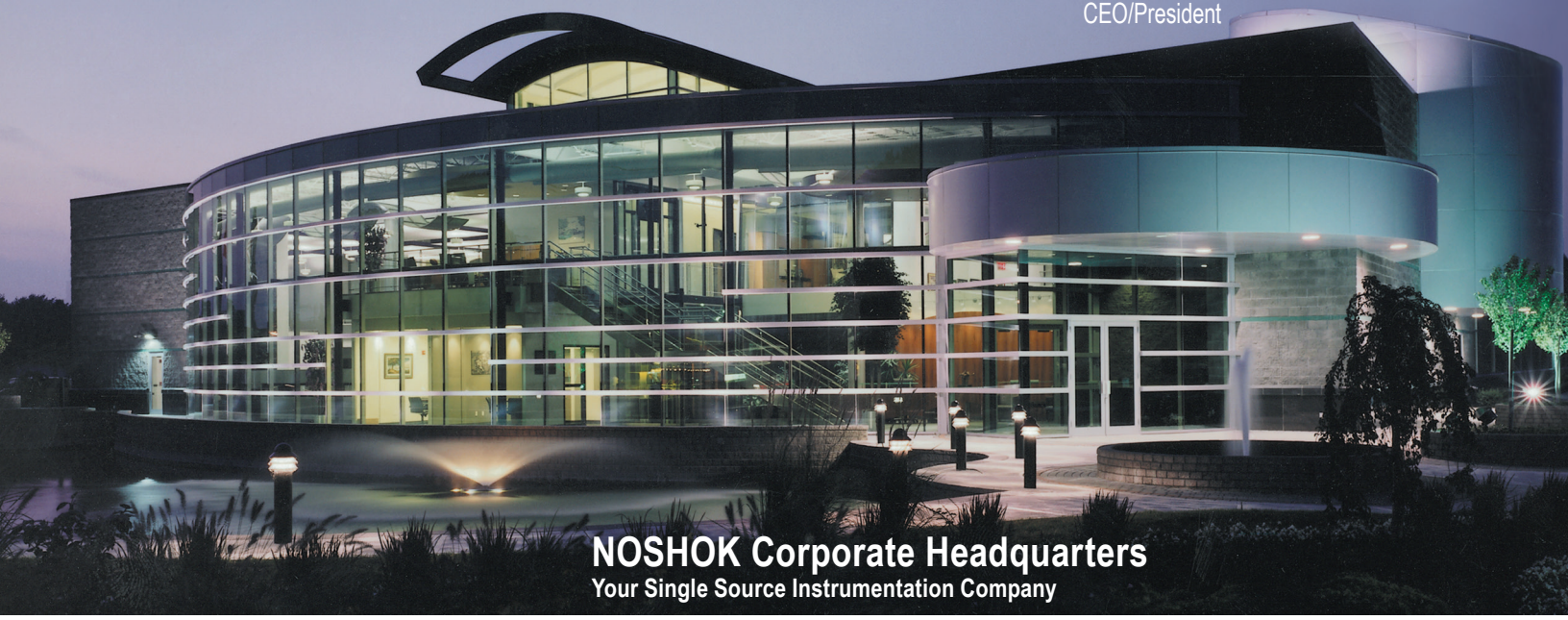

NOSHOK Corporate Headquarters
Your Single Source Instrumentation Company

NOSHOK is a member and actively supports:

ASME SETTING THE STANDARD 1880 2005 · fisa Distributors Serving Sanitary Processing · FPDA motion control solutions network · ASSOCIATION FOR HIGH TECHNOLOGY DISTRIBUTION AHTD · American Water Works Association · NATIONAL FLUID POWER ASSOCIATION NFPA

NOSHOK is an ISO 9001:2015 registered company.

WARRANTY INFORMATION

NOSHOK's **Eight Year Warranty** applies to our 3" and 5" 300 Series Bimetal Thermometers. Our **Three Year Warranty** applies to our 800 Series Platinum Resistance Temperature Transmitters, 810 Series Compact OEM Temperature Transmitters, 820/821 and 822/823 Series Digital Temperature Indicators, 850 Series Electronic Indicating Temperature Switch/Transmitters, 900/915 Series Probe-Type Industrial RTDs, 910 Series Probe-Type Industrial RTDs with Process Connection and 920 Series RTD Transmitter. Our **One Year Warranty** applies to our 100, 150, 300 (2") and 350 Series Bimetal Thermometers, Vapor Actuated Remote Thermometers and Thermowells.

NOSHOK guarantees all products to be free from defects in material and workmanship, to remain within catalogued accuracy specifications, and to operate within the catalogued performance specifications. These products must be operated within the catalogued environmental and application parameters. Determination of failure will be made by NOSHOK, Inc.'s equipment and personnel or a certified test facility specializing in this type of evaluation.

T A B L E O F C O N T E N T S

NOSHOK

DIAL INDICATING THERMOMETERS

Bimetal, Industrial Type:
100 SERIES 4-7

Bimetal, Testing and General Purpose:
150 SERIES 8-11

Bimetal, Industrial Type with External Reset, Sanitary Options:
300 SERIES 12-17

Bimetal, Testing and General Purpose with External Reset:
350 SERIES 18-21

Vapor Actuated Remote:
300/400/600/700 SERIES 22--29

DIAL INDICATING THERMOMETER OPTIONS

Maximum Indicating Pointer, Silicone Filled, Stem Types, Connections, Special Dials, Lenses, Certified Calibration 30-31

ELECTRONIC TEMPERATURE MEASUREMENT

Platinum Resistance Temperature Transmitter:
800 SERIES 32-33

Compact OEM Temperature Transmitter:
810 SERIES 34-35

Digital Temperature Indicator:
820/821 SERIES 36-37

Digital Temperature Indicator, Battery Powered
822/823 SERIES 38-39

Electronic Indicating Temperature Transmitter/Switch:
850 SERIES 40-41

INDUSTRIAL RESISTANCE TEMPERATURE DEVICES (RTD)

Industrial RTD, Probe Type:
900 SERIES 42-43

Industrial RTD, Probe Type with Connection Head:
910/915 SERIES 44-45

RTD Transmitter:
920 SERIES 46

RTD ACCESSORIES

Connection Heads, Terminal Blocks 47

THERMOWELLS

Thermowells:
50/75/100 SERIES 48-50

Reference Information 51-55

In keeping with and for purpose of product and/or manufacturing process improvements, NOSHOK, Inc. reserves the right to make design changes without prior notice.

Bimetal, Industrial Type

100 SERIES



- Heavy-duty, industrial thermometer featuring a weather-resistant, tamper-proof case
- Single °F, single °C, and dual scale options available
- Accuracy: ±1% full scale, Grade A, ASME B40.3
- 1-3/4", 2", 3" and 5" sizes - center back connection only
- 304 Stainless Steel case and bezel
- Standard stem lengths 2-1/2" through 42"
- Highly sensitive bimetallic helix coil is heat-treated for stress relief, and silicone-coated to minimize pointer vibration and maximize heat transfer and response time
- 360° groove around stem is a visual reference to show minimum immersion point
- Made in the U.S.A.

	SERIES	SPECIFICATIONS
Case & bezel	All 100 Series	304 Stainless Steel; 316 Stainless Steel optional
Lens	All 100 Series	Instrument glass
Pointer	All 100 Series	Aluminum, black finish
Stem diameter	18-110 20-110, 30-110, 50-110	.150" (3.81 mm) .250" (6.35 mm)
Accuracy	All 100 Series	±1% full scale, Grade A, ASME B40.3
Dial	All 100 Series	Anodized Aluminum with large black numbers and graduations
Process connection	18-110 20-110 30-110, 50-110	1/4" NPT, 1/8" and 3/8" NPT optional 1/4" NPT 1/2" NPT
Wetted parts	All 100 Series	304 Stainless Steel; 316 Stainless Steel optional
Hermetic seal	All 100 Series	Per ASME B40.3 dustproof and leakproof
Bimetal coil	All 100 Series	Silicone coated helix coil on ranges below 500 °F for vibration dampening, maximum heat transfer and response time
Over temperature limits	All 100 Series	Up to 250 °F 100%; 250 °F to 550 °F 50%; 550 °F to 1,000 °F continuous use up to 800 °F; intermittent use over 800 °F

APPLICATIONS

Used in almost every area of manufacturing, especially suited for applications in the following areas:

- Industrial process
- Petrochemical
- Food & beverage processing
- Commercial
- Wastewater

Thermowells are recommended for pressure, corrosive fluids and high velocity applications, see pages 48-50.

⚠ **WARNING:** This product can expose you to chemicals including Lead and Nickel, which are known to the State of California to cause cancer and birth defects or other reproductive harm. For more information go to www.P65Warnings.ca.gov

Adaptive Industrial Solutions | sales@adaptiveind.com | (877) 818-5009

ORDERING INFORMATION

DIAL SIZES	**18**	1-3/4" ††	**30**	3"		
	20	2"	**50**	5"		
CASE TYPES	**110**	Back connection				
STEM LENGTHS Available up to 120"	**025**	2-1/2"	**090**	9"	**240**	24"
	040	4"	**120**	12"	**300**	30"
	060	6"	**150**	15"	**360**	36"
	080	8" †	**180**	18"	**420**	42"
TEMPERATURE RANGES *Dual Scale °F/ °C*	**-100/100 F/C**	-100 °F/°C to 100 °F/°C	**0/250 F/C**	0 °F/°C to 250 °F/°C	**50/500 F/C**	50 °F/°C to 500 °F/°C
	-40/160 F/C	-40 °F/°C to 160 °F/°C	**20/240 F/C**	20 °F/°C to 240 °F/°C	**150/750 F/C**	150 °F/°C to 750 °F/°C
	0/140 F/C	0 °F/°C to 140 °F/°C	**25/125 F/C**	25 °F/°C to 125 °F/°C	**200/1000 F/C**	200 °F/°C to 1,000 °F/°C*
	0/180 F/C	0 °F/°C to 180 °F/C	**50/300 F/C**	50 °F/°C to 300 °F/°C		
	0/220 F/C	0 °F/°C to 220 °F/°C	**50/400 F/C**	50 °F/°C to 400 °F/°C		
Single Scale °F	**-100/100 F**	-100 °F to 100 °F	**0/300 F**	0 °F to 300 °F**	**50/550 F**	50 °F to 550 °F
	-50/120 F	-50 °F to 120 °F	**0/500 F**	0 °F to 500 °F**	**100/800 F**	100 °F to 800 °F**
	-40/160 F	-40 °F to 160 °F	**20/240 F**	20 °F to 240 °F	**150/750 F**	150 °F to 750 °F
	0/140 F	0 °F to 140 °F	**25/125 F**	25 °F to 125 °F	**200/1000 F**	200 °F to 1,000 °F*
	0/180 F	0 °F to 180 °F	**50/250 F**	50 °F to 250 °F		
	0/200 F	0 °F to 200 °F	**50/300 F**	50 °F to 300 °F		
	0/220 F	0 °F to 220 °F	**50/400 F**	50 °F to 400 °F		
	0/250 F	0 °F to 250 °F	**50/500 F**	50 °F to 500 °F		
Single Scale °C	**-75/175 C**	-75 °C to 175 °C	**0/50 C**	0 °C to 50 °C	**0/300 C**	0 °C to 300 °C
	-70/70 C	-70 °C to 70 °C**	**0/60 C**	0 °C to 60 °C**	**0/400 C**	0 °C to 400 °C
	-50/100 C	-50 °C to 100 °C**	**0/80 C**	0 °C to 80 °C**	**0/450 C**	0 °C to 450 °C
	-50/50 C	-50 °C to 50 °C	**0/100 C**	0 °C to 100 °C	**100/400 C**	100 °C to 400 °C
	-40/70 C	-40 °C to 70 °C	**0/150 C**	0 °C to 150 °C	**100/550 C**	100 °C to 550 °C*
	-20/120 C	-20 °C to 120 °C**	**0/200 C**	0 °C to 200 °C		
	-10/110 C	-10 °C to 110 °C**	**0/250 C**	0 °C to 250 °C		
		Consult factory for additional temperature ranges				
OPTIONS	**1/8**	1/8" NPT †	**AU**	1/2" NPT Adjustable Union **	**SL**	Silicone Filled ***
	3/8	3/8" NPT †	**HD**	Heavy-Duty Stem (0.375" Dia.) **	**ST**	Stainless Steel Tagging
	6	6 mm stem diameter **	**LL**	Polycarbonate Lens	**TG**	Tempered Glass Lens †††
	8	8 mm stem diameter **	**PL**	Acrylic Lens		
	316	316 SS Wetted Parts **	**SG**	Safety Glass Lens **		

Please consult your local NOSHOK Distributor or NOSHOK, Inc. for availability and delivery information.

Note: All 316 Stainless Steel construction (case, bezel, wetted parts) is available. Please consult factory.

* Thermometers with temperature ranges 200/1,000 °F and 100/500 °C are not recommended for continuous use above 800 °F/425 °C. **For intermittent use only.**
** Available for 30-110 and 50-110 models only.
*** Available for 20-110, 30-110 and 50-110 models only. Available only for ranges from -50 °F (-45 °C) to 500 °F (260 °C). Polycarbonate lens is standard with Silicone Fill.
† Available for 18-110 model only.
†† 18-110 model is only available in 2-1/2", 4", 6", 8", 12", 15" and 18" stem lengths.
††† Not available with Silicone Filled (SL) option.

EXAMPLE **30 – 110 – 120 – 0/140 F/C – LL**

Dial size.....3"
Case type ..... Back connection
Stem length .....12"
Temperature range..... 0 °F/°C to 140 °F/°C
Options.....Polycarbonate Lens

Dimensions

18-110

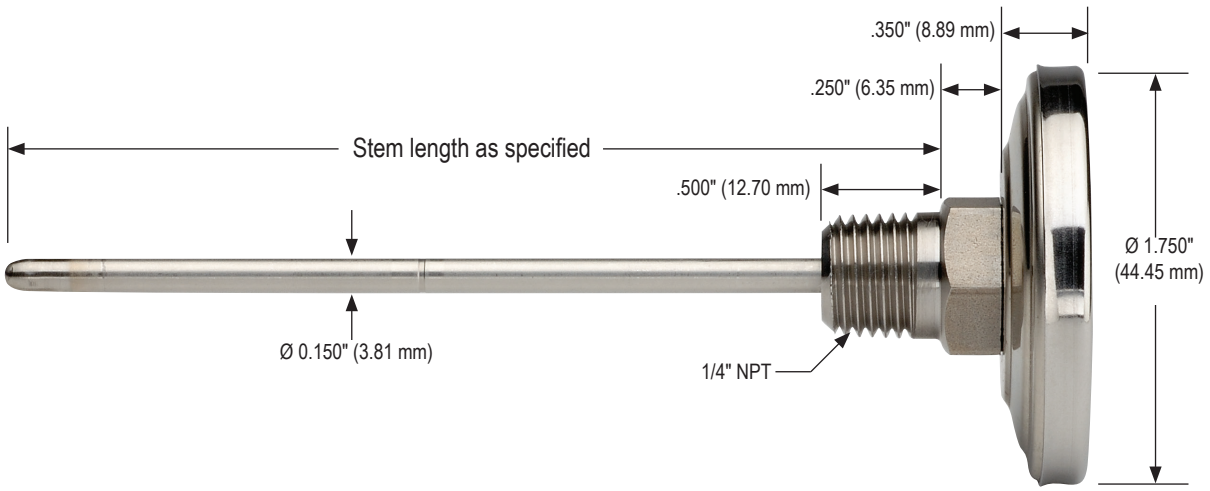

20-110

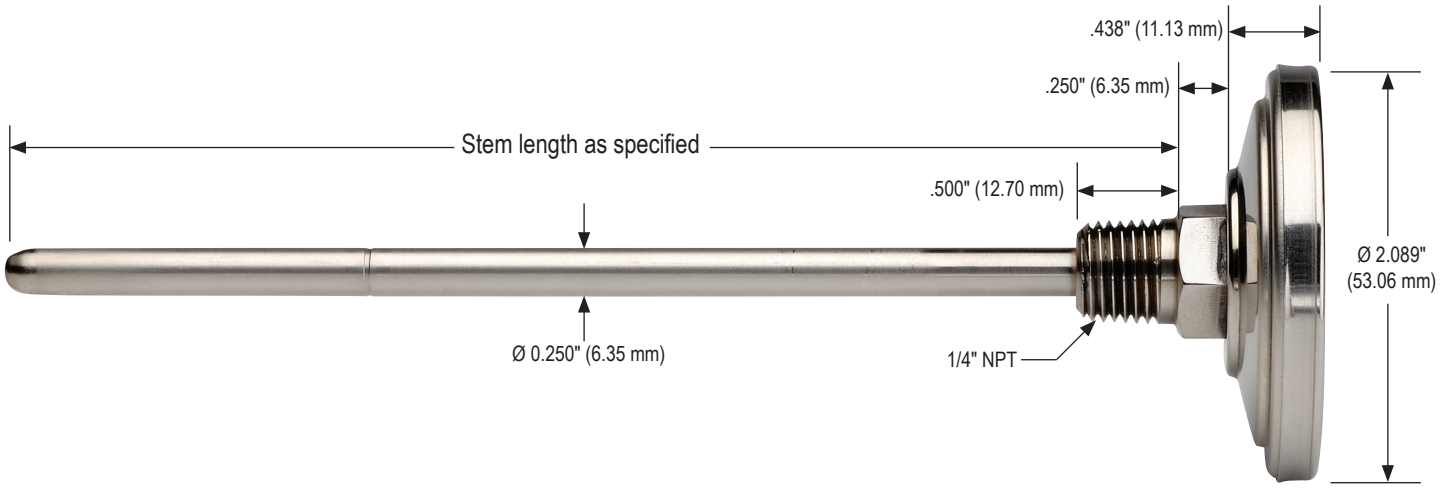

30-110

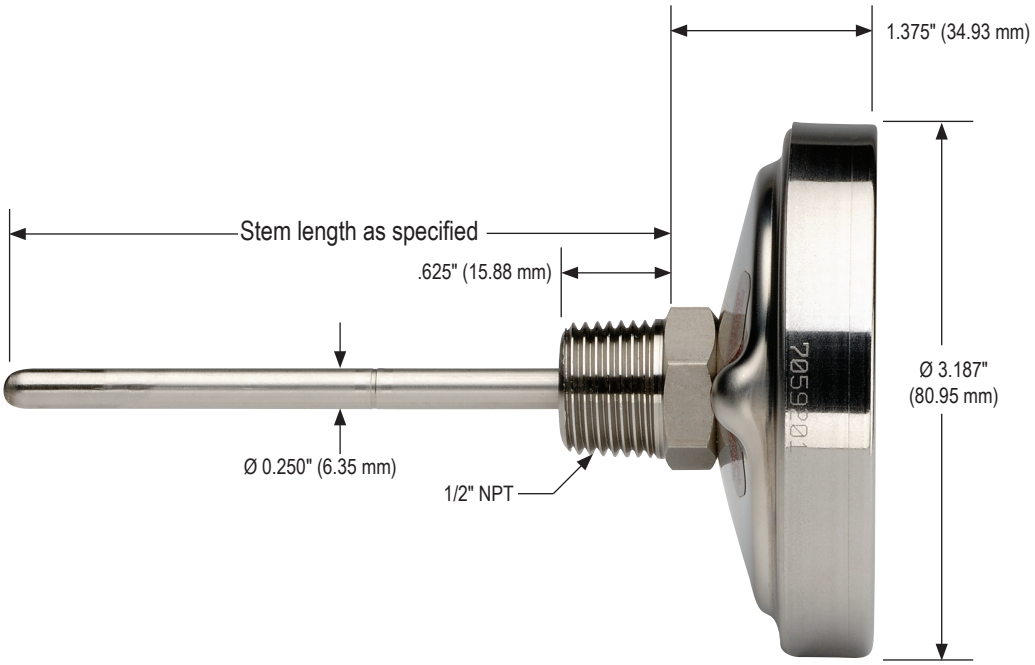
1.375" (34.93 mm)
Stem length as specified
.625" (15.88 mm)
Ø 3.187"
(80.95 mm)
Ø 0.250" (6.35 mm)
1/2" NPT

50-110

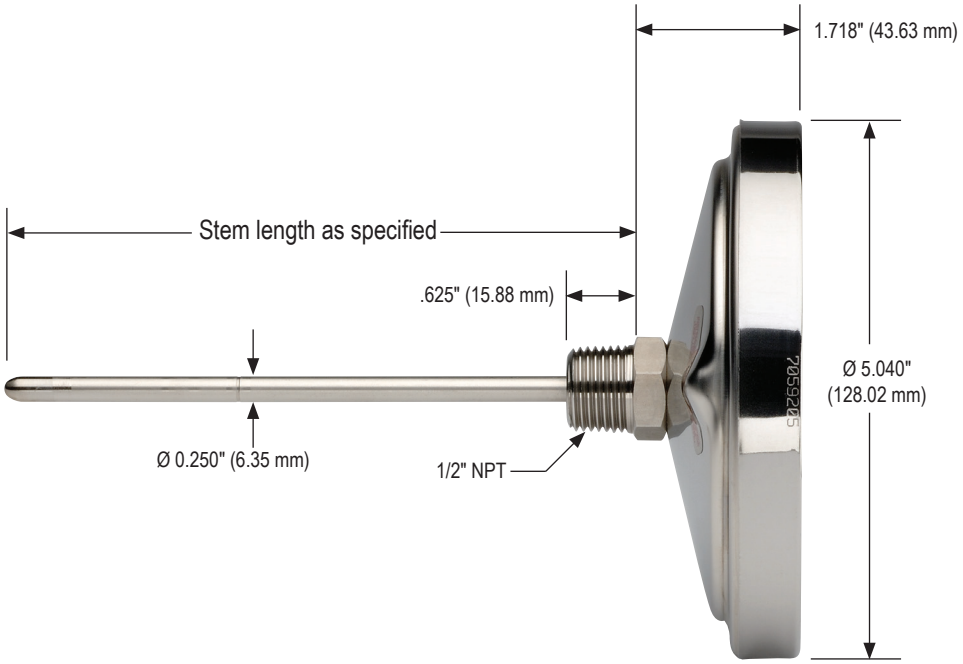
1.718" (43.63 mm)
Stem length as specified
.625" (15.88 mm)
Ø 5.040"
(128.02 mm)
Ø 0.250" (6.35 mm)
1/2" NPT

Bimetal, Testing and General Purpose



150 SERIES

- Designed for general purpose testing applications, featuring a weather-resistant, tamper-proof case
- Pocket sized model is used by inspectors, service and maintenance personnel for spot checking
- Single °F, single °C, and dual scale options (1-3/4" and 2" models only) available
- Accuracy: ±1% full scale, Grade A, ASME B40.3
- 1", 1-3/4" and 2" sizes - center back connection only
- 304 Stainless Steel case and bezel
- Highly sensitive bimetallic helix coil is heat-treated for stress relief, and silicone-coated to minimize pointer vibration and maximize heat transfer and response time
- 360° groove around stem is a visual reference to show minimum immersion point
- Made in the U.S.A.

APPLICATIONS

Used in almost every area of manufacturing, especially suited for laboratory testing and general purpose applications in the following areas:

- Laboratory
- Food & beverage processing
- Concrete
- Asphalt
- OEM equipment

	SERIES	SPECIFICATIONS
Case & bezel	All 150 Series	304 Stainless Steel
Lens	All 150 Series	Instrument glass
Pointer	All 150 Series	Aluminum, black finish
Stem diameter	All 150 Series	.150" (3.81 mm)
Accuracy	All 150 Series	±1% full scale, Grade A, ASME B40.3
Dial	All 150 Series	Anodized Aluminum with large black numbers and graduations
Wetted parts	All 150 Series	304 Stainless Steel
Hermetic seal	All 150 Series	Per ASME B40.3 dustproof and leakproof
Bimetal coil	All 150 Series	Silicone coated helix coil on ranges below 500 °F for vibration dampening, maximum heat transfer and response time
Over temperature limits	All 150 Series	Up to 250 °F 100%; 250 °F to 550 °F 50%; 550 °F to 1,000 °F continuous use up to 800 °F; intermittent use over 800 °F

Thermowells are recommended for pressure, corrosive fluids and high velocity applications, see pages 48-50.

⚠ **WARNING:** This product can expose you to chemicals including Lead and Nickel, which are known to the State of California to cause cancer and birth defects or other reproductive harm. For more information go to www.P65Warnings.ca.gov

Adaptive Industrial Solutions | sales@adaptiveind.com | (877) 818-5009

ORDERING INFORMATION

DIAL SIZES	**10**	1" **	**18**	1-3/4"	**20**	2"
CASE TYPES	**150**	Back connection				
STEM LENGTHS	**050**	5"	**120**	12" †		
	080	8"	**180**	18" †		
TEMPERATURE RANGES	**-100/100 F/C**	-100 °F/°C to 100 °F/°C	**0/250 F/C**	0 °F/°C to 250 °F/°C	**50/550 F/C**	50 °F/°C to 550 °F/°C
	-40/160 F/C	-40 °F/°C to 160 °F/°C	**20/240 F/C**	20 °F/°C to 240 °F/°C	**150/750 F/C**	150 °F/°C to 750 °F/°C
Dual Scale °F/ °C	**0/140 F/C**	0 °F/°C to 140 °F/°C	**25/125 F/C**	25 °F/°C to 125 °F/°C	**200/1000 F/C**	200 °F/°C to 1,000 °F/°C *
(Not available on 1"model)	**0/180 F/C**	0 °F/°C to 180 °F/C	**50/300 F/C**	50 °F/°C to 300 °F/°C		
	0/220 F/C	0 °F/°C to 220 °F/°C	**50/400 F/C**	50 °F/°C to 400 °F/°C		
	-100/100 F	-100 °F to 100 °F	**0/220 F**	0 °F to 220 °F **	**50/400 F**	50 °F to 400 °F
	-50/120 F	-50 °F to 120 °F	**0/250 F**	0 °F to 250 °F	**50/500 F**	50 °F to 500 °F **
Single Scale °F	**-40/160 F**	-40 °F to 160 °F **	**20/240 F**	20 °F to 240 °F	**50/550 F**	50 °F to 550 °F
	0/140 F	0 °F to 140 °F	**25/125 F**	25 °F to 125 °F **	**150/750 F**	150 °F to 750 °F **
	0/180 F	0 °F to 180 °F	**50/250 F**	50 °F to 250 °F	**200/1000 F**	200 °F to 1,000 °F *
	0/200 F	0 °F to 200 °F	**50/300 F**	50 °F to 300 °F		
	-75/175 C	-75 °C to 175 °C	**-10/110 C**	-10 °C to 110 °C **	**0/300 C**	0 °C to 300 °C
	-50/100 C	-50 °C to 100 °C	**0/50 C**	0 °C to 50 °C**	**0/400 C**	0 °C to 400 °C
Single Scale °C	**-50/25 C**	-50 °C to 25 °C	**0/100 C**	0 °C to 100 °C	**100/400 C**	100 °C to 400 °C
	-50/50 C	-50 °C to 50 °C	**0/150 C**	0 °C to 150 °C	**100/550 C**	100 °C to 550 °C*
	-40/70 C	-40 °C to 70 °C **	**0/200 C**	0 °C to 200 °C		
	-20/120C	-20 °C to 120 °C	**0/250 C**	0 °C to 250 °C **		
		Consult factory for additional temperature ranges				
OPTIONS	**LL**	Polycarbonate Lens	**PS**	Pocket Sheath ***	**ST**	Stainless Steel Tagging
	PL	Acrylic Lens †	**SL**	Silicone Filled †	**TG**	Tempered Glass Lens ††

Please consult your local NOSHOK Distributor or NOSHOK, Inc. for availability and delivery information.

* Thermometers with temperature ranges 200/1000 °F and 100/500 °C are not recommended for continuous use above 800 °F/425 °C. **For intermittent use only.**

** 1" model available **only** in these ranges.

*** Available for 10-150 and 18-150 models only, with stem lengths of 5" or 8".

† Available for 20-150 models only. Available only for ranges from -50 °F (-45 °C) to 500 °F (260 °C). Polycarbonate lens is standard with Silicone Fill.

†† Not available on 10-150 model. Also not available with Silicone Filled (SL) option.

EXAMPLE

20 – 150 – 080 – 0/140 F/C – LL

Dial size.....2"
Case type ..... Back connection
Stem length .....8"
Temperature range..... 0 °F/°C to 140 °F/°C
Options..... Polycarbonate Lens

Dimensions

10-150

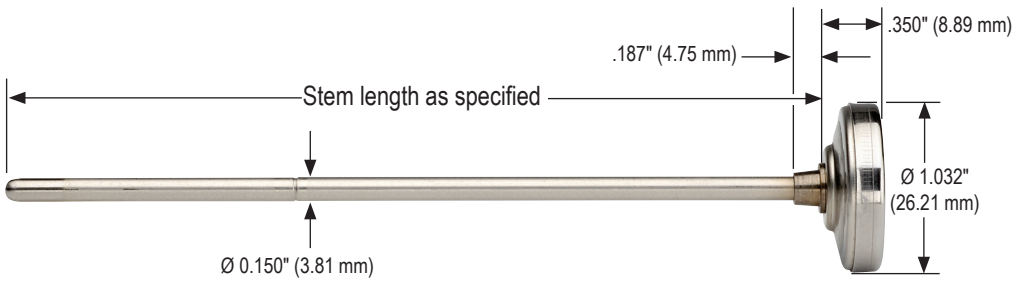

18-150

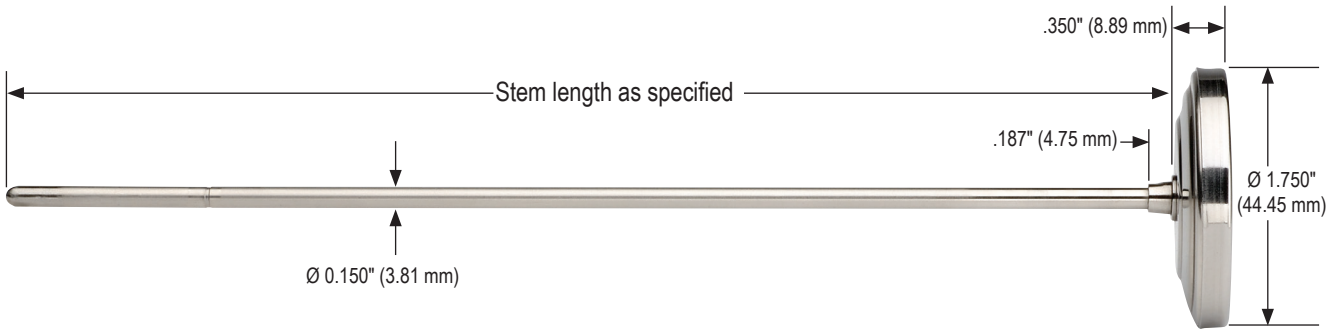

20-150

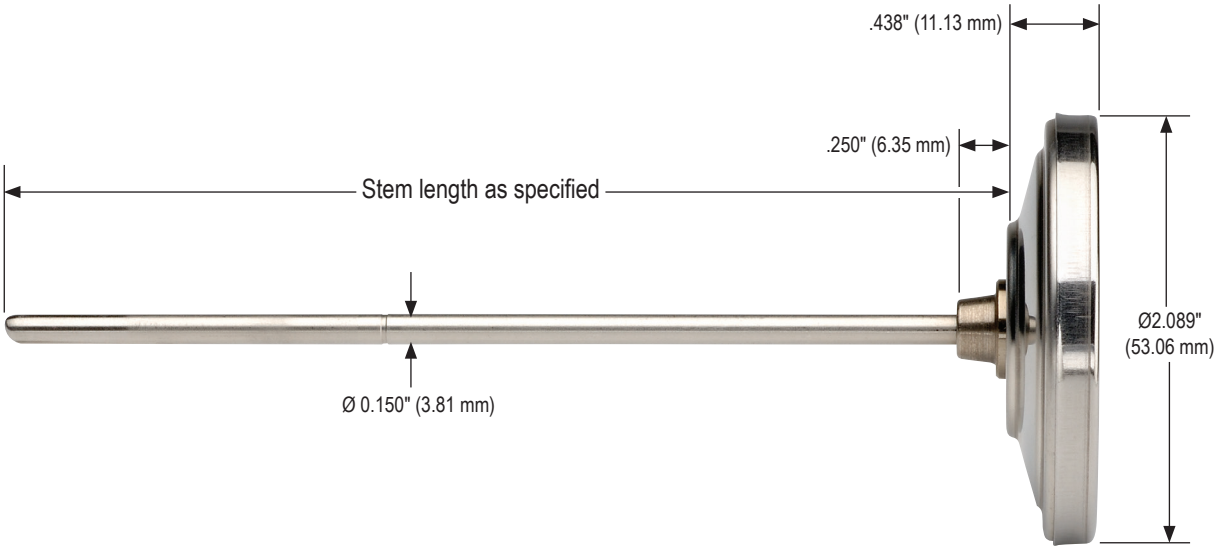
.438" (11.13 mm)
.250" (6.35 mm)
Stem length as specified
Ø2.089"
(53.06 mm)
Ø 0.150" (3.81 mm)

Bimetal, Industrial Type with External Reset, Sanitary Options



300 SERIES

3-A® Options Available

- Highest quality thermometers available on the market
- Easy to calibrate with 1/16" Allen key
- Corrosion-resistant 304 Stainless Steel case and bezel provide a hermetic seal to prevent lens fogging and moisture damage
- Sanitary Tri-Clamp® and 3-A options available
- Single °F, single °C, and dual scale options available
- Accuracy: ±1% full scale, Grade A, ASME B40.3
- 2", 3" and 5" sizes - center back and bottom connections
- 2" Dial Size - 1/4" NPT; 3" & 5 " Dial Sizes - 1/2" NPT
- Standard stem lengths 2-1/2" through 42"
- Minimum or maximum indicating pointers are available in 3" and 5" sizes
- Highly sensitive bimetallic helix coil is heat-treated for stress relief, and silicone-coated to minimize pointer vibration and maximize heat transfer and response time
- 360° groove around stem is a visual reference to show minimum immersion point
- Made in the U.S.A.

APPLICATIONS

- Industrial process
- Petrochemical
- Food & beverage processing
- Commercial
- Wastewater



Sanitary options available

	SERIES	SPECIFICATIONS
Case & bezel	All 300 Series	304 Stainless Steel
Lens	All 300 Series	Instrument glass
Pointer	All 300 Series	Aluminum, black finish
Stem diameter	300 Series, Standard & 06SAN 300 Series, All Other Sanitary models	.250" (6.35 mm) .375" (9.53 mm)
Accuracy	All 300 Series	±1% full scale, Grade A, ASME B40.3
Dial	All 300 Series	Anodized Aluminum with large black numbers and graduations
Process connection	300 Series, 2" Dial Size, Standard 300 Series, 3" & 5" Dial Size, Standard 300 Series, Sanitary	1/4" NPT 1/2" NPT 3/4" Tri-Clamp through 4" Tri-Clamp
Wetted parts	300 Series, Standard 300 Series, Sanitary	304 Stainless Steel; 316 Stainless Steel optional 316 Stainless Steel
Hermetic seal	All 300 Series	Per ASME B40.3 dustproof and leakproof
Bimetal coil	All 300 Series	Silicone coated helix coil on ranges below 500 °F for vibration dampening, maximum heat transfer and response time
Over temperature limits	All 300 Series	Up to 250 °F 100%; 250 °F to 550 °F 50%; 550 °F to 1,000 °F continuous use up to 800 °F; intermittent use over 800 °F
Recalibrator	All 300 Series	External reset
Adjustable angle form	320 Series	All Stainless Steel brackets with screws that loosen to allow 360° rotation of head and 180° adjustment of stem position

Thermowells are recommended for pressure, corrosive fluids and high velocity applications, see pages 48-50.

⚠ **WARNING:** This product can expose you to chemicals including Lead and Nickel, which are known to the State of California to cause cancer and birth defects or other reproductive harm. For more information go to www.P65Warnings.ca.gov

Adaptive Industrial Solutions | sales@adaptiveind.com | (877) 818-5009

ORDERING INFORMATION

DIAL SIZES	**20**	2" (Back connected only)	**30**	3"	**50**	5"
CASE TYPES	**300**	Bottom connection	**310**	Back connection	**320**	Adjustable angle connection **
STEM LENGTHS	**025**	2-1/2"	**120**	12"	**300**	30"
	040	4"	**150**	15"	**360**	36"
	060	6"	**180**	18"	**420**	42"
	090	9"	**240**	24"		**Available up to 120"**
TEMPERATURE RANGES	**-100/100 F/C**	-100 °F/°C to 100 °F/°C	**0/250 F/C**	0 °F/°C to 250 °F/°C	**50/500 F/C**	50 °F/°C to 500 °F/°C
	-40/160 F/C	-40 °F/°C to 160 °F/°C	**20/240 F/C**	20 °F/°C to 240 °F/°C	**150/750 F/C**	150 °F/°C to 750 °F/°C
Dual Scale °F/ °C	**0/140 F/C**	0 °F/°C to 140 °F/°C	**25/125 F/C**	25 °F/°C to 125 °F/°C †	**200/1000 F/C**	200 °F/°C to 1,000 °F/°C *
	0/180 F/C	0 °F/°C to 180 °F/C	**50/300 F/C**	50 °F/°C to 300 °F/°C		
	0/220 F/C	0 °F/°C to 220 °F/°C	**50/400 F/C**	50 °F/°C to 400 °F/°C		
	-100/100 F	-100 °F to 100 °F	**0/250 F**	0 °F to 250 °F	**50/400 F**	50 °F to 400 °F
	-50/120 F	-50 °F to 120 °F	**0/300 F**	0 °F to 300 °F**	**50/500 F**	50 °F to 500 °F
	-40/160 F	-40 °F to 160 °F	**0/500 F**	0 °F to 500 °F**	**50/550 F**	50 °F to 550 °F
Single Scale °F	**0/140 F**	0 °F to 140 °F	**20/240 F**	20 °F to 240 °F	**100/800 F**	100 °F to 800 °F**
	0/180 F	0 °F to 180 °F	**25/125 F**	25 °F to 125 °F	**150/750 F**	150 °F to 750 °F
	0/200 F	0 °F to 200 °F	**50/250 F**	50 °F to 250 °F	**200/1000 F**	200 °F to 1,000 °F*
	0/220 F	0 °F to 220 °F	**50/300 F**	50 °F to 300 °F		
	-75/175 C	-75 °C to 175 °C	**0/50 C**	0 °C to 50 °C	**0/300 C**	0 °C to 300 °C
	-70/70 C	-70 °C to 70 °C **	**0/60 C**	0 °C to 60 °C **	**0/400 C**	0 °C to 400 °C
Single Scale °C	**-50/100 C**	-50 °C to 100 °C **	**0/80 C**	0 °C to 80 °C **	**0/450 C**	0 °C to 450 °C
	-50/50 C	-50 °C to 50 °C	**0/100 C**	0 °C to 100 °C	**100/400 C**	100 °C to 400 °C
	-40/70 C	-40 °C to 70 °C	**0/150 C**	0 °C to 150 °C	**100/550 C**	100 °C to 550 °C *
	-20/120 C	-20 °C to 120 °C **	**0/200 C**	0 °C to 200 °C	**(Consult factory for additional**	
	-10/110 C	-10 °C to 110 °C **	**0/250 C**	0 °C to 250 °C	**temperature ranges)**	
OPTIONS	**6**	6 mm stem diameter **	**HD**	Heavy-Duty Stem (0.375" Dia.) **	**SG**	Safety Glass Lens **
	8	8 mm stem diameter **	**LL**	Polycarbonate Lens	**SL**	Silicone Filled †††
	316	316 SS Connection & Stem **	**MIP**	Min or Max Indicating Pointer***	**ST**	Stainless Steel Tagging
	AU	1/2" NPT Adjustable Union**	**MIP2**	Min and Max Indicating Pointers***	**TG**	Tempered Glass Lens ††
	GD	Glow Dial †	**PL**	Acrylic Lens		

Please consult your local NOSHOK Distributor or NOSHOK, Inc. for availability and delivery information.

Note: All 316 Stainless Steel construction (case, bezel, wetted parts) is available. Please consult factory.

* Thermometers with temperature ranges 200/1000 °F and 100/500 °C are not recommended for continuous use above 800 °F/425 °C. **For intermittent use only.**

** Available for 3" and 5" dial sizes only.

*** Available only on 30-310 and 50-310 models.

† Available only on 50-310 and 50-320 model. Includes reflective pointer and two reflective clips.

†† Only available with 3 inch dial size and without silicone filling (-SL).

††† Available only for ranges from -50 °F (-45 °C) to 500 °F (260 °C). Polycarbonate lens is standard with Silicone Fill.

ORDERING INFORMATION - SANITARY TRI-CLAMP

DIAL SIZES	**30**	3"	**50**	5"		
CASE TYPES	**300**	Bottom connection	**310**	Back connection	**320**	Adjustable angle connection
STEM LENGTHS	**01625**	1.625"	**045**	4.5"	**135**	13.5"
	025	2.5"	**075**	7.5"	**165**	16.5"
	0275	2.75"	**105**	10.5"	**225**	22.5"
TEMPERATURE RANGES	**0/220 F/C**	0 °F/°C to 220 °F/°C	**20/240 F/C**	20 °F/°C to 240 °F/°C		
Dual Scale °F/ °C	**0/250 F/C**	0 °F/°C to 250 °F/°C	**50/300 F/C**	50 °F/°C to 300 °F/°C		
Single Scale °F	**-40/160 F**	-40 °F to 160 °F	**0/250 F**	0 °F to 250 °F	**50/300 F**	50 °F to 300 °F
	0/140 F	0 °F to 140 °F	**0/300 F**	0 °F to 300 °F		
	0/220 F	0 °F to 220 °F	**20/240 F**	20 °F to 240 °F		
Single Scale °C	**-20/120 C**	-20 °C to 120 °C	**0/100 C**	0 °C to 100 °C		
	-10/110 C	-10 °C to 110 °C	**0/150 C**	0 °C to 150 °C		
PROCESS CONNECTIONS	**06SAN**	3/4" Sanitary Tri-Clamp®	**16SAN**	2" Sanitary Tri-Clamp®	**24SAN**	3" Sanitary Tri-Clamp®
	12SAN	1-1/2" Sanitary Tri-Clamp®	**20SAN**	2-1/2" Sanitary Tri-Clamp®	**32SAN**	4" Sanitary Tri-Clamp®

Note: Most standard bimetal thermometer options are available with Sanitary Tri-Clamp connection, consult factory.

EXAMPLE **50 – 310 – 120 – 50/300 F/C – SL**

Dial size.....5"
Case type..... Back connection
Stem length.....12"
Temperature range.....50 °F/°C to 300 °F/C
Options.....Silicone Filled

Dimensions

20-310

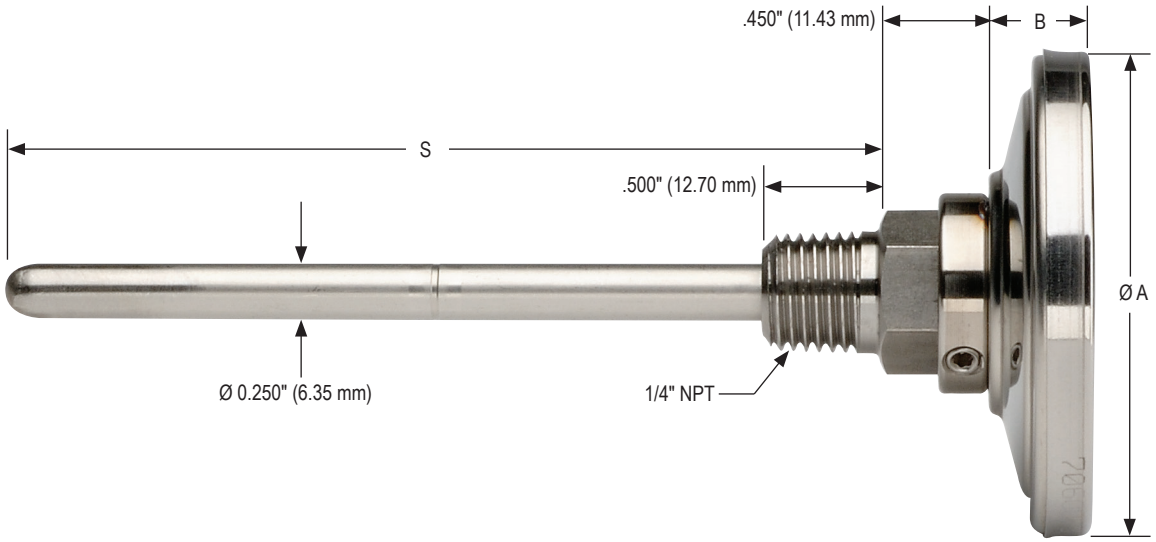

See page 15 for dimension chart.

30-310/50-310

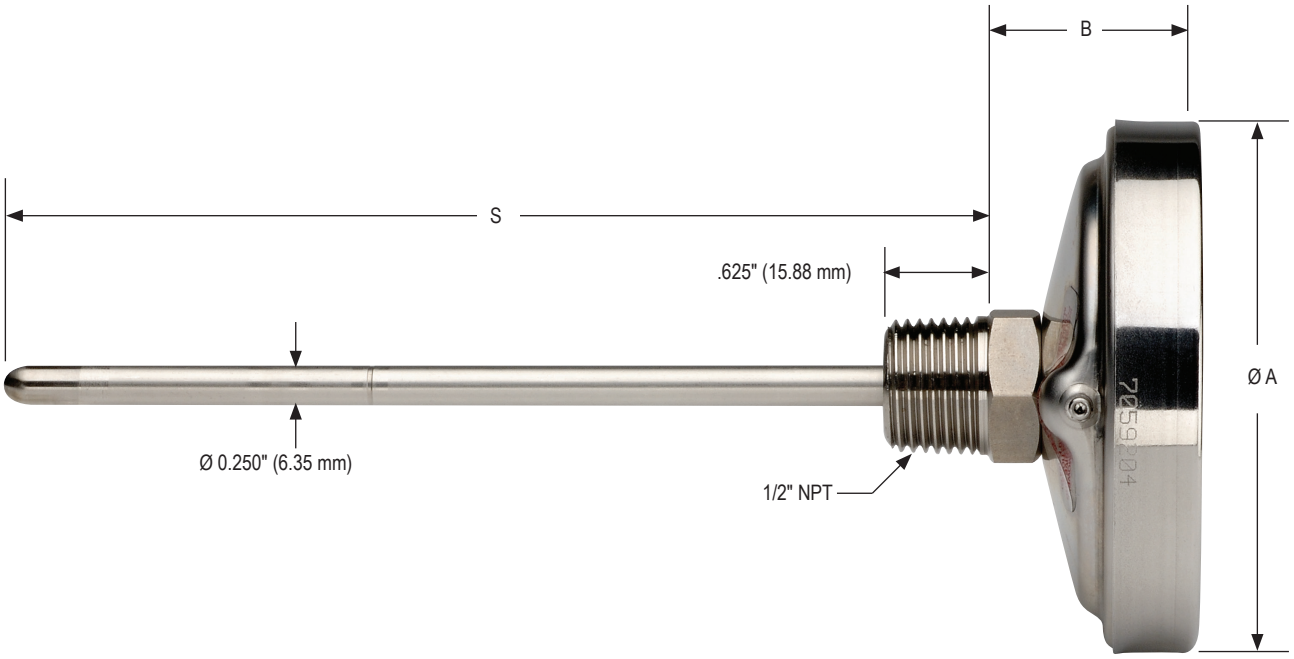

See page 15 for dimension chart.

Adaptive Industrial Solutions | sales@adaptiveind.com | (877) 818-5009

30-300/50-300

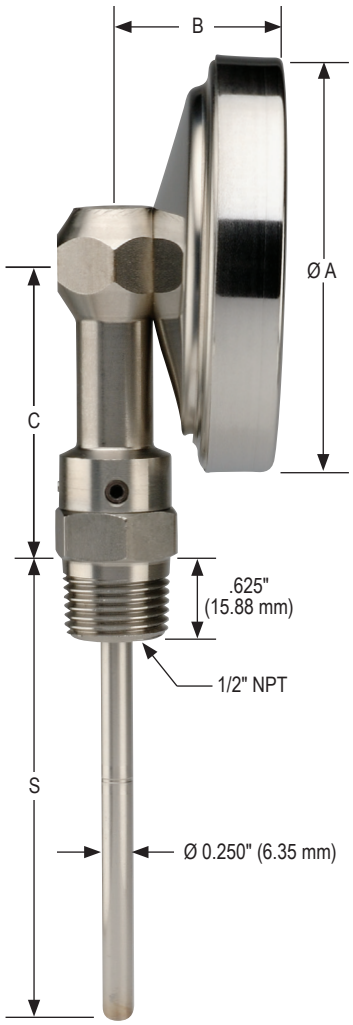

30-320/50-320

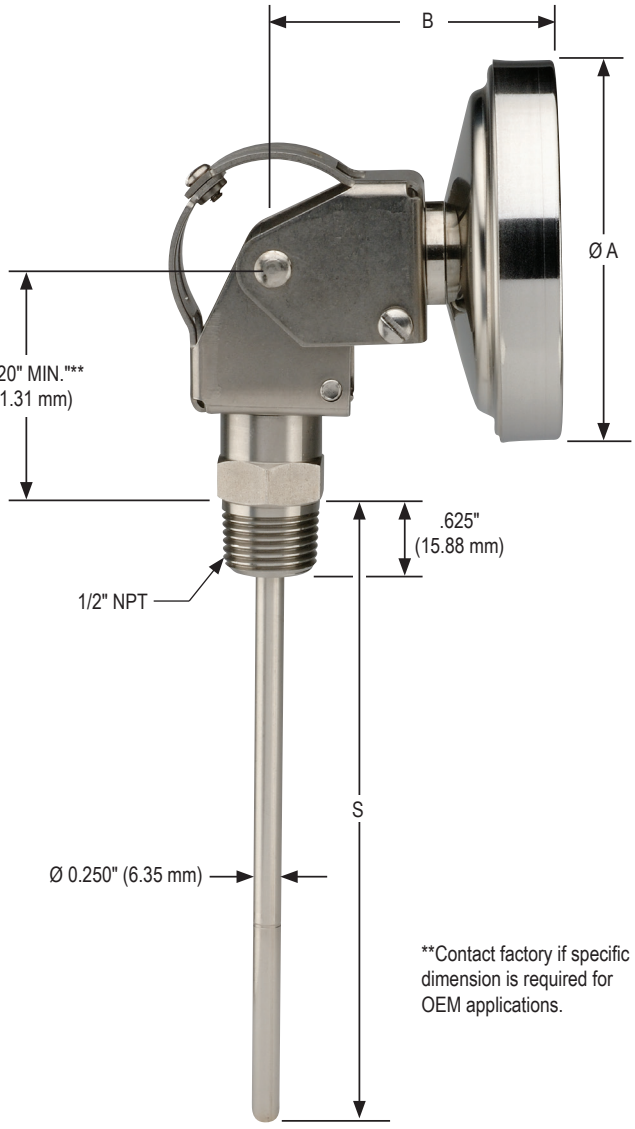

**Contact factory if specific dimension is required for OEM applications.

Series	Ø A	B	C	S (Stem Length)
20-310	2.089" 53.06 mm	.438" 11.13 mm	—	As specified
30-310	3.187" 80.95 mm	1.375" 34.93 mm	—	As specified
50-310	5.040" 128.02 mm	1.718" 43.63 mm	—	As specified
30-300	3.187" 80.95 mm	1.187" 30.15 mm	2.300" (58.42 mm)	As specified
50-300	5.040" 128.02 mm	1.625" 41.28 mm	3.000" (76.20 mm)	As specified
30-320	3.187" 80.95 mm	2.430" 61.72 mm	—	As specified
50-320	5.040" 128.02 mm	2.660" 67.56 mm	—	As specified

300 Series Sanitary Bimetal Thermometer

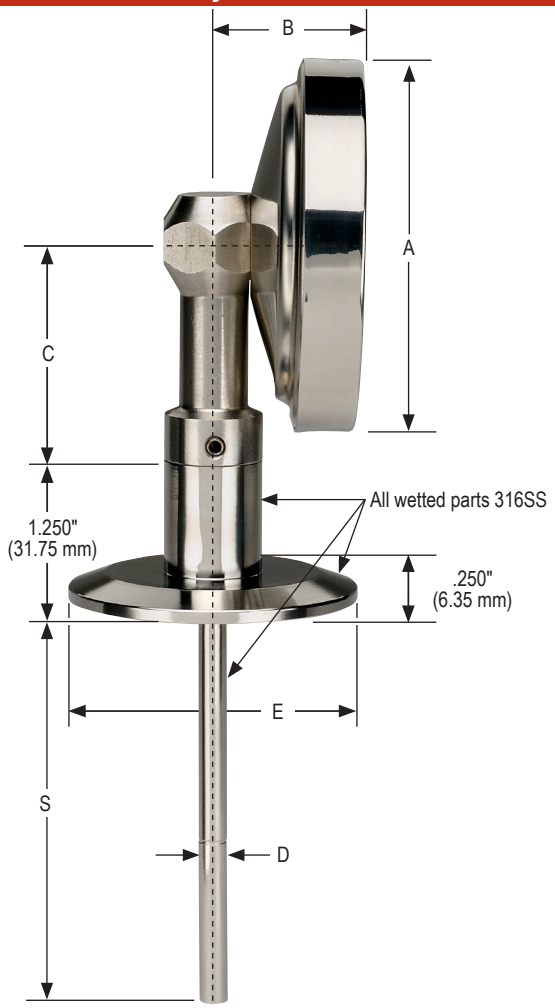

See page 17 for dimension chart.

310 Series Sanitary Bimetal Thermometer

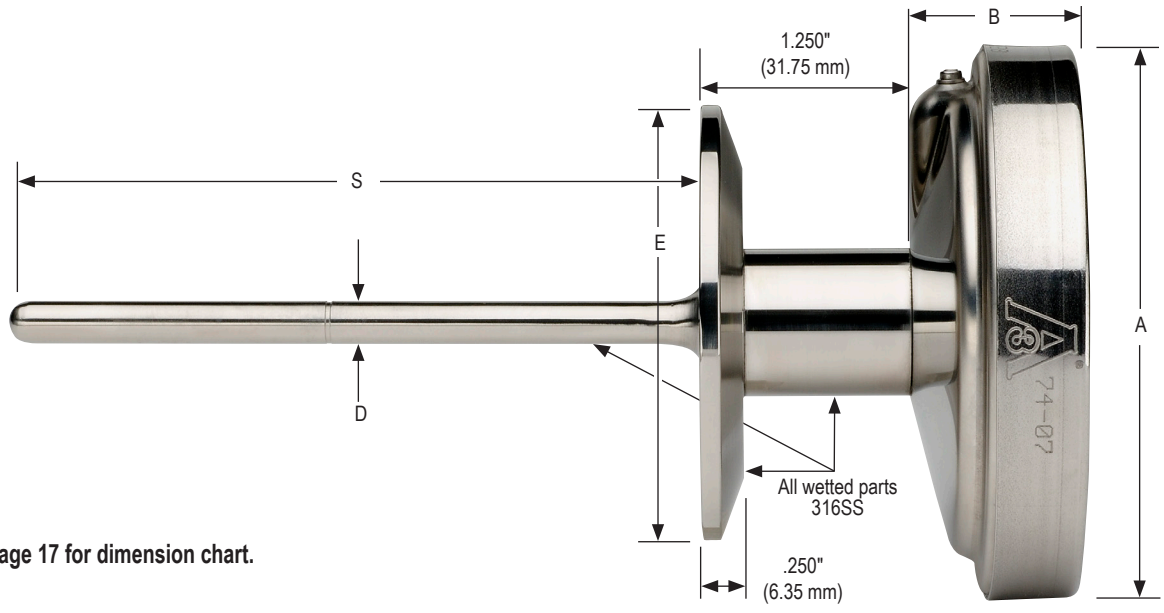

See page 17 for dimension chart.

320 Series Sanitary Bimetal Thermometer

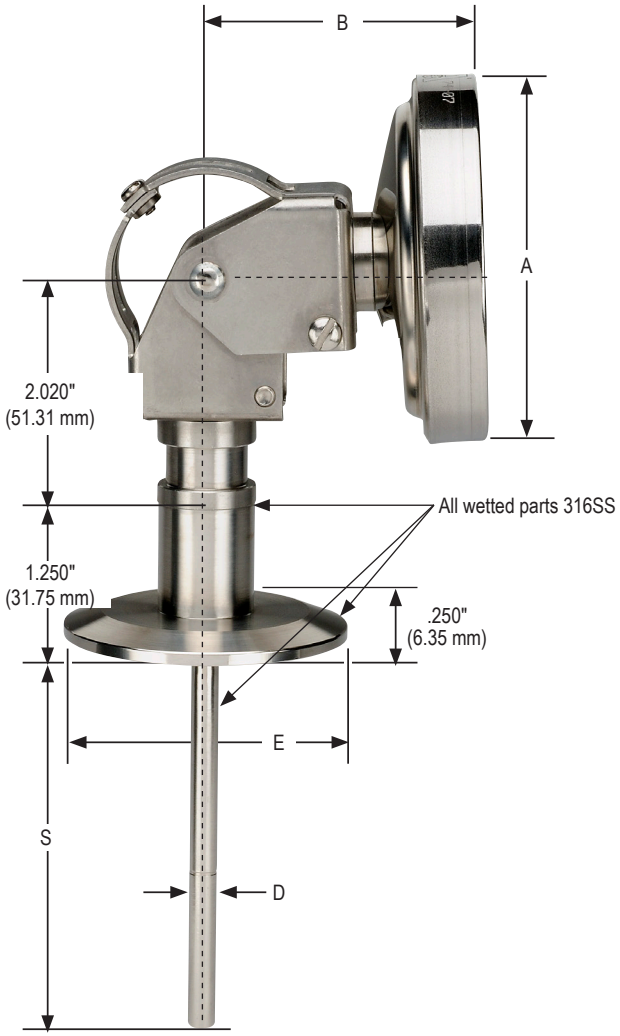

300 SERIES BIMETAL THERMOMETERS - SANITARY TRI-CLAMP® MODELS					
Series	**A**	**B**	**C**	**D**	**S (Stem Length)**
30-300	3.187" 80.95 mm	1.187" 30.15 mm	1.875" 47.63 mm	.375" 9.53 mm	As specified
30-310	3.187" 80.95 mm	.890" 22.61 mm	—	.375" 9.53 mm	As specified
30-320	3.187" 80.95 mm	2.430" 61.72 mm	—	.375" 9.53 mm	As specified
50-300	5.040" 128.02 mm	1.625" 41.28 mm	2.625" (66.68 mm)	.375" 9.53 mm	As specified
50-310	5.040" 128.02 mm	1.328" 33.73 mm	—	.375" 9.53 mm	As specified
50-320	5.040" 128.02 mm	2.660" 67.56 mm	—	.375" 9.53 mm	As specified

TRI-CLAMP® FITTING		
Part Number Designation	**Tri-Clamp Connection Size**	**E**
06SAN *	3/4"	.984" 25.00 mm
12SAN **	1-1/2"	1.984" 50.40 mm
16SAN	2"	2.516" 63.90 mm
20SAN	2-1/2"	3.047" 77.40 mm
24SAN	3"	3.579" 90.90 mm
32SAN	4"	4.682" 118.90 mm

* **Used on both 1/2" and 3/4" lines**

** **Used on both 1" and 1-1/2" lines**

Bimetal, Testing and General Purpose with External Reset

350 SERIES



- Designed for general purpose testing applications, featuring a weather-resistant, tamper-proof case
- Pocket sized model is used by inspectors, service and maintenance personnel for spot checking
- A friction adjustment nut design provides easy calibration and maximum accuracy at a selected range
- Single °F, single °C, and dual scale (1-3/4" and 2" models only) options available
- Accuracy: ±1% full scale, Grade A, ASME B40.3
- 1", 1-3/8", 1-3/4", 2" and 3" sizes - center back connection only
- 304 Stainless Steel case and bezel
- Standard stem lengths 5 through 18"
- Highly sensitive bimetallic helix coil is heat-treated for stress relief, and silicone-coated to minimize pointer vibration and maximize heat transfer and response time
- 360° groove around stem is a visual reference to show minimum immersion point
- Adjustable pan clips are standard on 18-350, 20-350 and 30-350 models with 5" and 8" stem lengths
- Made in the U.S.A.

APPLICATIONS

Used in almost every area of manufacturing, especially suited for laboratory testing and general purpose applications in the following areas:

- Laboratory
- Food & beverage processing
- Concrete
- Asphalt
- OEM equipment
- HVAC

	SERIES	SPECIFICATIONS
Case & bezel	All 350 Series	304 Stainless Steel; 316 Stainless Steel optional
Lens	14-350 All other 350 Series models	Convex Polycarbonate Instrument Glass
Pointer	All 350 Series	Aluminum, black finish
Stem diameter	All 350 Series	.150" (3.81 mm)
Accuracy	All 350 Series	±1% full scale, Grade A, ASME B40.3
Dial	All 350 Series	Anodized Aluminum with large black numbers and graduations
Wetted parts	All 350 Series	304 Stainless Steel; 316 Stainless Steel optional
Hermetic seal	All 350 Series	Per ASME B40.3 dustproof and leakproof
Bimetal coil	All 350 Series	Silicone coated helix coil on ranges below 500 °F for vibration dampening, maximum heat transfer and response time
Over temperature limits	All 350 Series	Up to 250 °F 100%; 250 °F to 550 °F 50%; 550 °F to 1,000 °F continuous use up to 800 °F; intermittent use over 800 °F
Recalibrator	All 350 Series	External reset

Thermowells are recommended for pressure, corrosive fluids and high velocity applications, see pages 48-50.

⚠ **WARNING:** This product can expose you to chemicals including Lead and Nickel, which are known to the State of California to cause cancer and birth defects or other reproductive harm. For more information go to www.P65Warnings.ca.gov

Adaptive Industrial Solutions | sales@adaptiveind.com | (877) 818-5009

ORDERING INFORMATION						
DIAL SIZES	**10**	1" **	**18**	1-3/4"	**30**	3"
	14	1-3/8" **	**20**	2"		
CASE TYPES	**350**	Back connection				
STEM LENGTHS	**050**	5" **	**120**	12"		
	080	8" **	**180**	18"		
TEMPERATURE RANGES *Dual Scale °F/ °C* (Not available on 1"model)	**-100/100 F/C**	-100 °F/°C to 100 °F/°C	**0/250 F/C**	0 °F/°C to 250 °F/°C	**50/550 F/C**	50 °F/°C to 550 °F/°C
	-40/160 F/C	-40 °F/°C to 160 °F/°C	**20/240 F/C**	20 °F/°C to 240 °F/°C	**150/750 F/C**	150 °F/°C to 750 °F/°C
	0/140 F/C	0 °F/°C to 140 °F/°C	**25/125 F/C**	25 °F/°C to 125 °F/°C	**200/1000 F/C**	200 °F/°C to 1,000 °F/°C *
	0/180 F/C	0 °F/°C to 180 °F/C	**50/300 F/C**	50 °F/°C to 300 °F/°C		
	0/220 F/C	0 °F/°C to 220 °F/°C	**50/400 F/C**	50 °F/°C to 400 °F/°C		
Single Scale °F	**-100/100 F**	-100 °F to 100 °F	**0/220 F**	0 °F to 220 °F **	**50/400 F**	50 °F to 400 °F
	-50/120 F	-50 °F to 120 °F	**0/250 F**	0 °F to 250 °F	**50/500 F**	50 °F to 500 °F **
	-40/160 F	-40 °F to 160 °F **	**20/240 F**	20 °F to 240 °F	**50/550 F**	50 °F to 550 °F
	0/140 F	0 °F to 140 °F	**25/125 F**	25 °F to 125 °F **	**150/750 F**	150 °F to 750 °F **
	0/180 F	0 °F to 180 °F	**50/250 F**	50 °F to 250 °F	**200/1000 F**	200 °F to 1,000 °F *
	0/200 F	0 °F to 200 °F	**50/300 F**	50 °F to 300 °F		
Single Scale °C	**-75/175 C**	-75 °C to 175 °C	**-10/110 C**	-10 °C to 110 °C **	**0/300 C**	0 °C to 300 °C
	-50/100 C	-50 °C to 100 °C	**0/50 C**	0 °C to 50 °C**	**0/400 C**	0 °C to 400 °C
	-50/25 C	-50 °C to 25 °C	**0/100 C**	0 °C to 100 °C	**100/400 C**	100 °C to 400 °C
	-50/50 C	-50 °C to 50 °C	**0/150 C**	0 °C to 150 °C	**100/550 C**	100 °C to 550 °C *
	-40/70 C	-40 °C to 70 °C **	**0/200 C**	0 °C to 200 °C		
	-20/120 C	-20 °C to 120 °C	**0/250 C**	0 °C to 250 °C **		
	Consult factory for additional temperature ranges					
OPTIONS	**LL**	Polycarbonate Lens	**PS**	Pocket Sheath***	**TG**	Tempered Glass Lens †
	PL	Acrylic Lens	**ST**	Stainless Steel Tagging		

Please consult your local NOSHOK Distributor or NOSHOK, Inc. for availability and delivery information.

Note: All 316 Stainless Steel construction (case, bezel, wetted parts) is available. Please consult factory.

* Thermometers with temperature ranges 200/1000 °F and 100/500 °C are not recommended for continuous use above 800 °F/425 °C. **For intermittent use only.**

** 10-350 and 14-350 models are only available in these stem lengths and ranges.

*** Available for 5" or 8" stem lengths only.

† Not available on 10-350 model. Also not available with Silicone Filled (SL) option.

EXAMPLE **30 – 350 – 120 – 50/300 F/C – LL**

Dial size ..... 3"
Case type ..... Back connection
Stem length ..... 12"
Temperature range ..... 50 °F/°C to 300 °F/C
Options ..... Polycarbonate lens

Dimensions

14-350

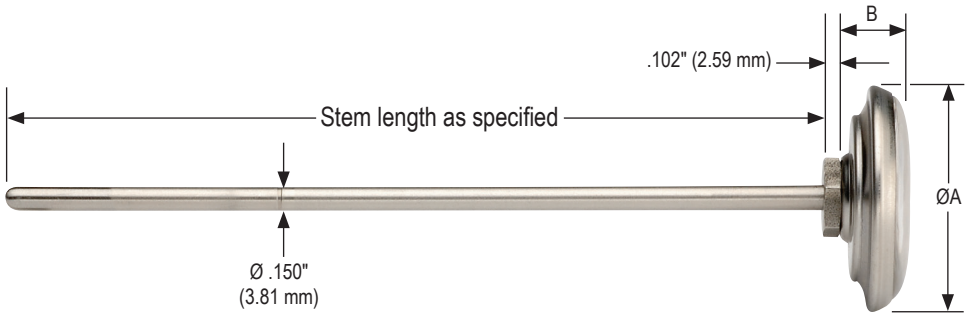

See page 19 for dimension chart.

10-350/18-350/20-350/30-350

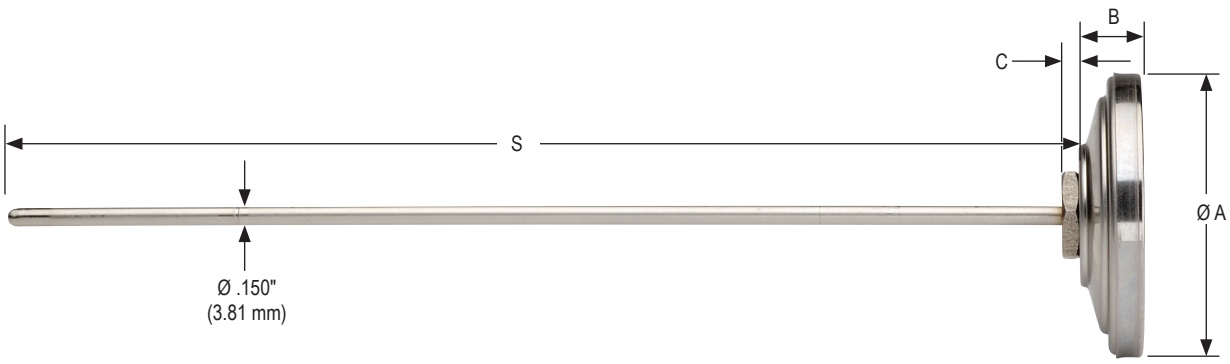

See page 19 for dimension chart.

Series	Ø A	B	C	S (Stem Length)
10-350	1.032" 26.21 mm	.350" 8.89 mm	—	As specified
14-350	1.358" 34.50 mm	.456" 11.58 mm	—	As specified
18-350	1.750" 44.45 mm	.412" 10.47 mm	.102" 2.59 mm	As specified
20-350	2.089" 53.06 mm	.438" 11.13 mm	.120" 3.05 mm	As specified
30-350	3.200" 81.28 mm	.465" 11.81 mm	.120" 3.05 mm	As specified



Pocket Sheath is available on 14-350 (shown left) and 10-350 (shown right) models, with 5" or 8" stem.

Vapor Actuated Remote

300/400/ 600/700 SERIES



- Indicates media temperature using a temperature-actuated liquid in the sensing element and a highly accurate, high quality pressure gauge
- As the media temperature increases, the capillary fill fluid vaporizes, increasing pressure in the Bourdon tube to activate the movement and pointer for proper indication
- Ranges available from -40 °F/C to 60 °F/C through 100 °F/C to 350 °F/C
- 2-1/2", 4", 4-1/2" and 6" sizes
- Brass, Stainless Steel, or Phenolic case
- Dry or liquid filled
- Bottom, back or lower back connected
- Mounting options: front or rear flange, bezel, and u-clamp
- Capillary material: Copper or Stainless Steel
- Bulb material & dimensions: Copper or Stainless Steel, 2-5/8" x 3/8" through 7-5/8" x 3/8"
- The dial scale graduations are non-linear, therefore the highest degree of accuracy and readability is found in the upper half of the scale

	SERIES	SPECIFICATIONS
Lens	300, 600, 700 Series 400 Series	Acrylic Instrument glass
Pointer	All	Aluminum, black finish
Accuracy	All	±2.0% full scale, Grade B, ASME B40.4
Dial	All	Aluminum, white background, dual scale, black Celsius scale and black Fahrenheit scale

APPLICATIONS

- Power transformers
- Paper mills
- Refineries
- Petrochemical
- Oil and gas
- Chemical
- HVAC/R
- Food processing
- Pharmaceutical

Thermowells are recommended for pressure, corrosive fluids and high velocity applications, see pages 48-50.

⚠ **WARNING:** This product can expose you to chemicals including Lead and Nickel, which are known to the State of California to cause cancer and birth defects or other reproductive harm. For more information go to www.P65Warnings.ca.gov

ORDERING INFORMATION				
300 SERIES	**25-300**	2-1/2", Brass case, bottom connection	**25-310**	2-1/2", Brass case, back connection
400 SERIES	**40-400**	4", all Stainless, bottom connection	**40-410**	4", all Stainless, back connection
	60-400	6", all Stainless, bottom connection	**60-410**	6", all Stainless, back connection
600 SERIES	**45-640**	4-1/2", Phenolic case/Brass bottom connection		
700 SERIES	**45-740**	4-1/2", Phenolic case/Stainless bottom connection		
GAUGE FILL FLUIDS	**0**	Dry gauge	**2**	-40° service
	1	Glycerin	**3**	Silicone
MOUNTING OPTIONS	**0**	None	**3**	Rear flange[2]
	1	Chrome front flange[1]	**4**	Bezel & u-clamp[3]
	2	Brass front flange[1]	**5**	Stainless Steel front flange[4]
TEMPERATURE RANGES	**1**	-40 °F/°C to 60 °F/°C	**6**	30 °F/°C to 180 °F/°C
	2	-20 °F/°C to 120 °F/°C	**7**	30 °F/°C to 240 °F/°C
	3	0 °F/°C to 250 °F/°C	**8**	30 °F/°C to 300 °F/°C
	4	0 °F/°C to 300 °F/°C	**9**	50 °F/°C to 350 °F/°C
	5	20 °F/°C to 220 °F/°C	**10**	100 °F/°C to 350 °F/°C
CAPILLARY TYPES/MATERIALS	**1**	Plain Copper	**3**	Plain Stainless Steel
	2	Armored Copper	**4**	Armored Stainless Steel
CAPILLARY LENGTH	**##**	Specify in feet		
BULB STYLES/MATERIALS	**1**	Plain Copper	**3**	1/2" NPT union Copper
	2	Plain Stainless Steel	**4**	1/2" NPT union Stainless Steel
BULB DIMENSIONS	**1**	2-5/8" x 3/8"*	**6**	4" x 3/8"
	2	4-1/2" x 3/8"	**7**	9" x 3/8"
	3	8" x 3/8"	**8**	7-5/8" x 3/8"
	4	3-1/2" x 3/8"	**15**	6" x 1/2"[5]
	5	6" x 3/8"		
OPTIONS	**CC**	Certified Calibration		

Please consult your local NOSHOK Distributor or NOSHOK, Inc. for availability and delivery information.

* Not available for gauge sizes ≥4" or ≥16' capillary
[1] Only available on 300 Series
[2] Not available on 600/700 Series
[3] Only available on back connection case types
[4] Only available on 400 Series
[5] 4" gauge or larger requires 8" bulb

EXAMPLE

25-310 – 2 – 1 – 7 – 2 – 15 – 3 – 1

Series/size/connection..... 2-1/2", Brass case, back connection
Gauge fill fluid .....-40º service
Mounting option .....Chrome front flange
Temperature range.....30 °F/°C to 240 °F/°C
Capillary type/material.....Armored Copper
Capillary length .....15'
Bulb style/material .....1/2" NPT union Copper
Bulb dimension .....2-5/8" x 3/8"

Dimensions

25-300

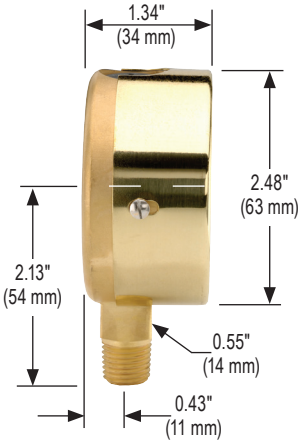

25-310

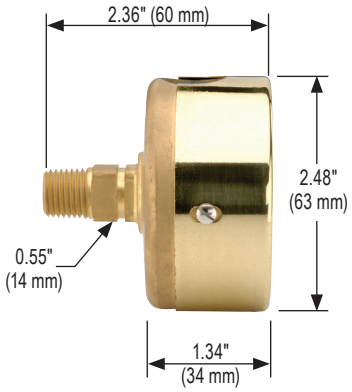

25-300 Front Flange

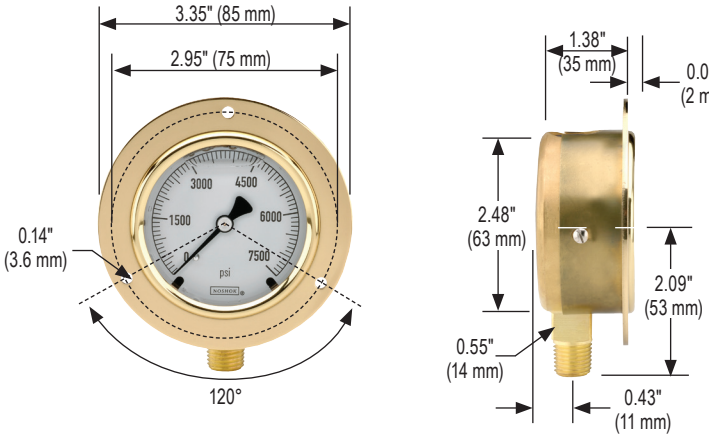

25-310 Front Flange

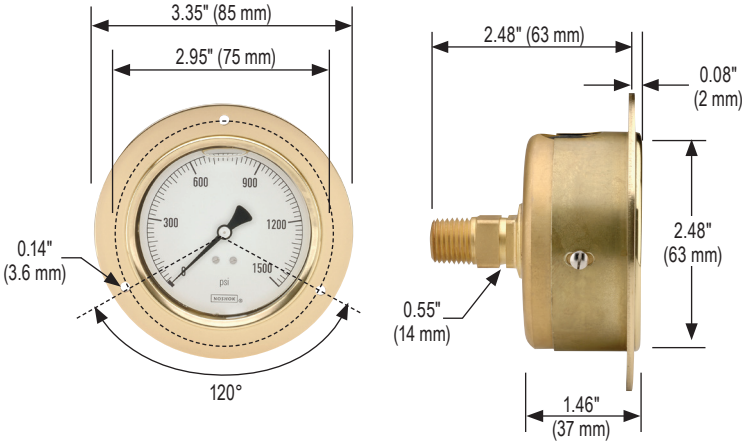

25-300 Rear Flange

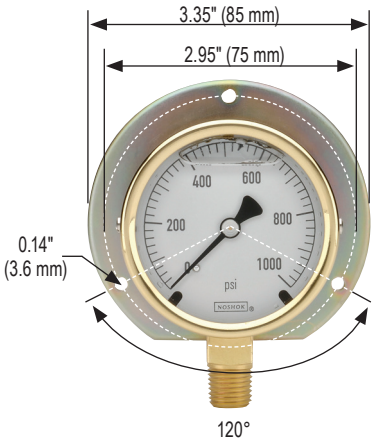

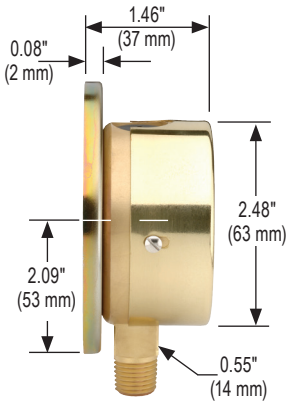

25-310 Rear Flange

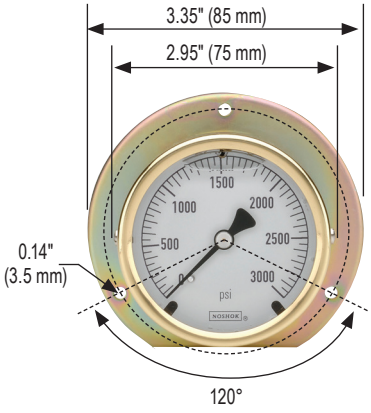

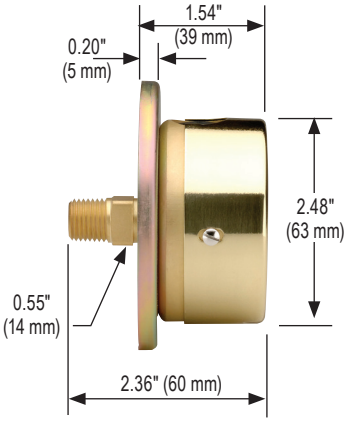

25-310 Chrome Bezel with U-Clamp

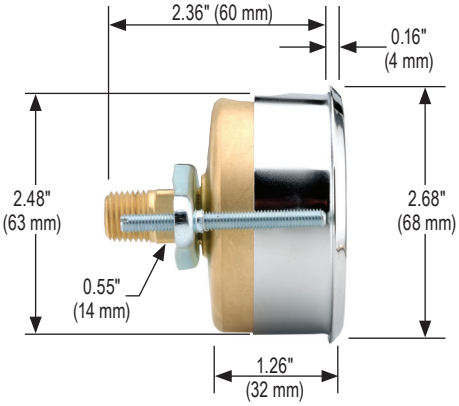

Dimensions

40-400

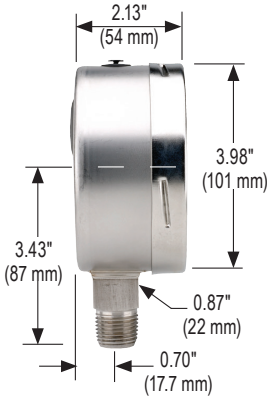

60-400

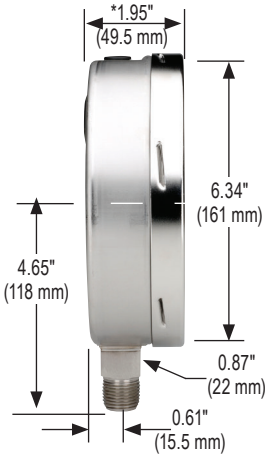

* ≥ 1,500 psi increase by 0.67" (17 mm)

40-410

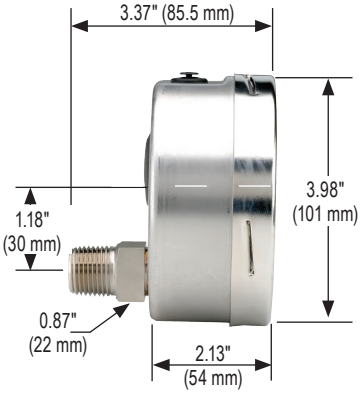

60-410

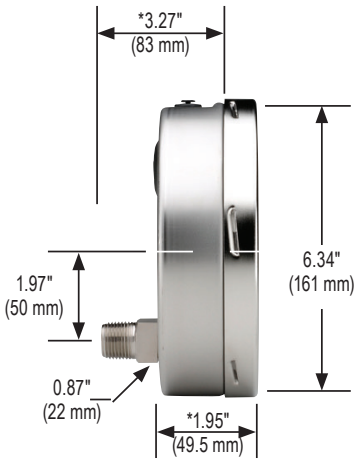

* ≥ 1,500 psi increase by 0.67" (17 mm)

40-400 Front Flange

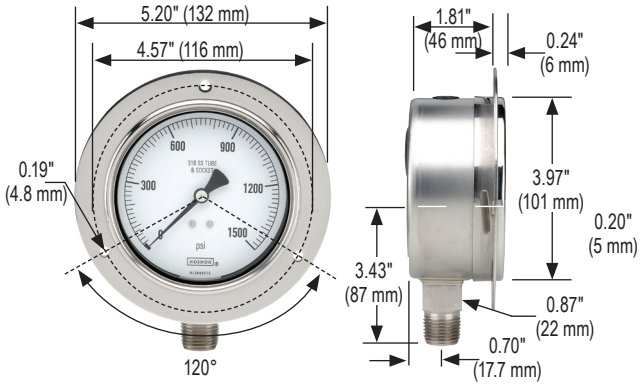

60-400 Front Flange

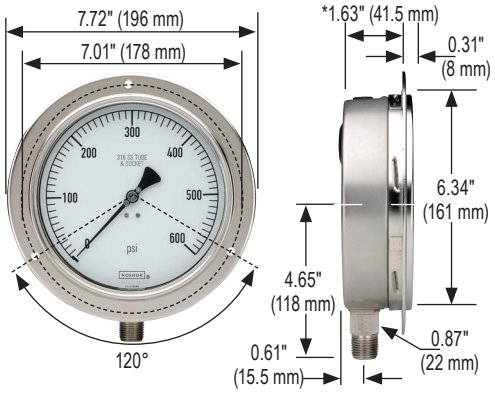

40-410 Front Flange

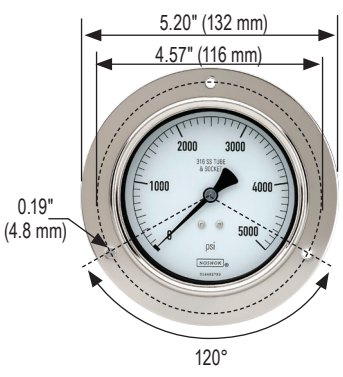

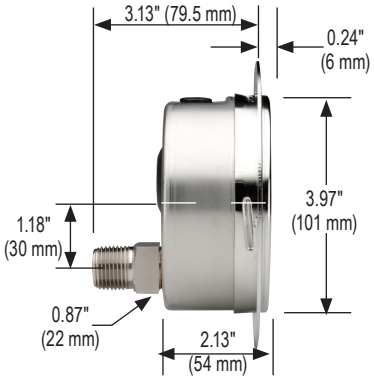

60-410 Front Flange

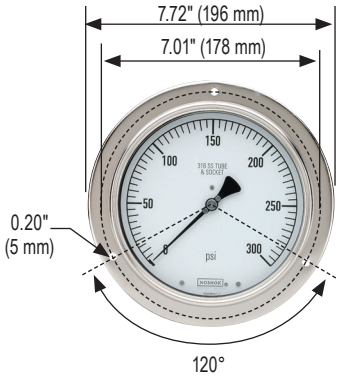

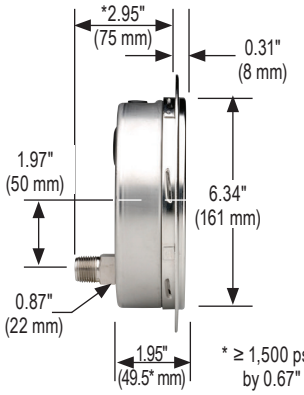

40-400 Rear Flange

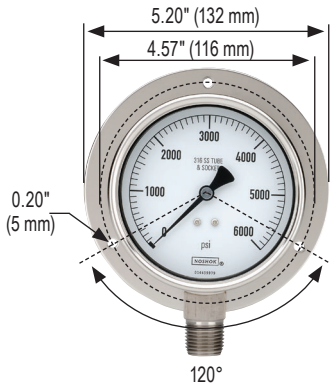

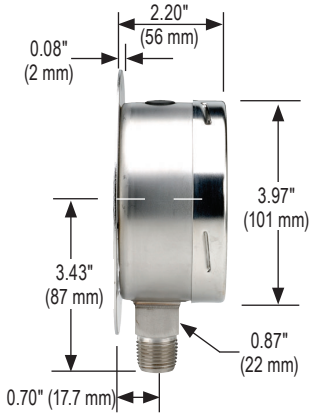

60-400 Rear Flange

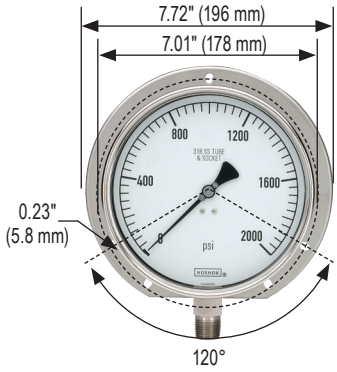

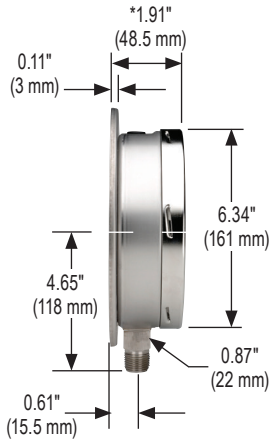

Dimensions

40-410 Rear Flange

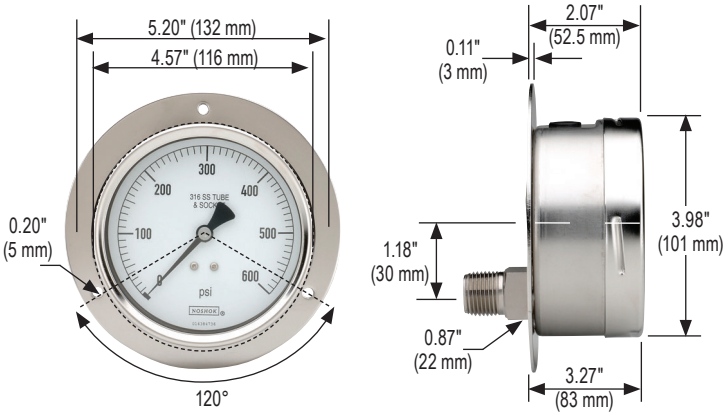

60-410 Rear Flange

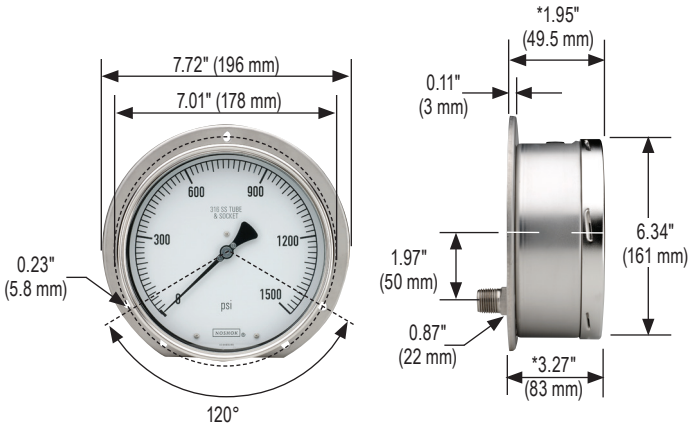

40-410/510 SS Bezel w/U-Clamp

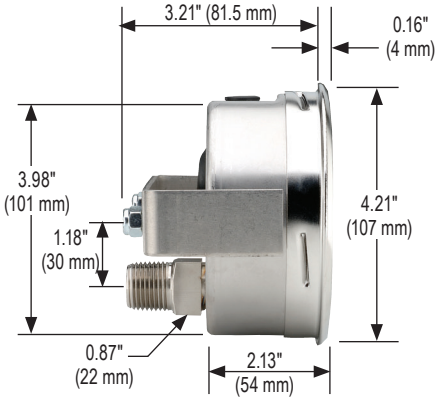

60-410 SS Bezel w/U-Clamp

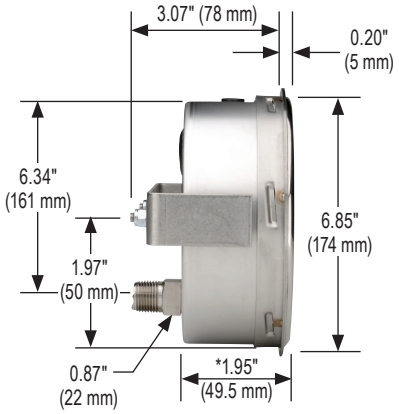

45-640 & 45-740

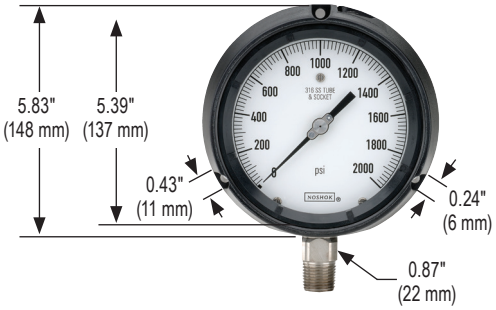
5.83"
(148 mm)
5.39"
(137 mm)
0.43"
(11 mm)
0.24"
(6 mm)
0.87"
(22 mm)
psi

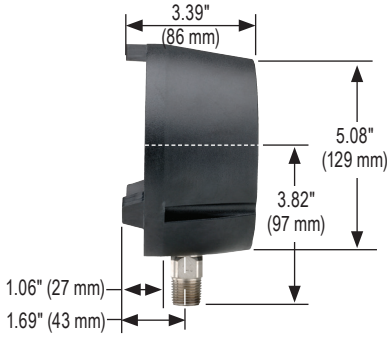
3.39"
(86 mm)
5.08"
(129 mm)
3.82"
(97 mm)
1.06" (27 mm)
1.69" (43 mm)

Dial Indicating Thermometer Options

ADJUSTABLE UNION CONNECTION
- Can be used to reposition the dial face for better viewing
- Also helpful when installing a thermometer where space is limited



CERTIFIED CALIBRATION
- Available on all NOSHOK thermometers
- Certified calibration provides the user with a serial numbered thermometer along with a calibration sheet against a primary temperature standard
- Traceable to the National Institute of Standards and Technology

CONNECTIONS
- In addition to our standard 1/2" NPT connection, 1/4" , 3/8" NPT and metric connections are also available
- If a special connection is required, please consult the factory
- Other options include a plain stem with an adjustable compression fitting, or left, right or top connections



GLOW DIAL (GD)
- Allows up close daylight and/or distant night time viewing
- 5" Adjustable angle or back connect
- Reflective Pointer
- Two reflective clips included to indicate custom minimum and maximum limits

LENSES
- Laminated safety glass lenses are available on all 3" and 5" NOSHOK bimetal thermometers
- Acrylic and polycarbonate lenses are available on all NOSHOK bimetal thermometers also, however they should not be used where case temperature exceeds 300 °F/150 °C

MINIMUM OR MAXIMUM INDICATING POINTER (MIP)
- The MIP allows you to view your minimum **or** maximum temperatures for visual clarification of safe operation
- Available only on 30-310 and 50-310 models



NOSHOK

MINIMUM AND MAXIMUM INDICATING POINTER (MIP2)

- The MIP2 allows you to view your minimum **and** maximum temperatures for visual clarification of safe operation
- Available only on 30-310 and 50-310 models



MOUNTING FLANGES

- Various sizes and types of mounting flanges are available



SILICONE FILLED

- All 2", 3" and 5" NOSHOK Industrial bimetal thermometers are offered in a filled version
- For applications where severe vibration may be a factor
- Silicone dampens and lubricates the internal mechanism thus reducing pointer oscillation and premature wear
- A polycarbonate lens is standard with a silicone filled thermometer
- Maximum case temperature not to exceed 300 °F (150 °C)



SPECIAL DIALS

- Special ranges and dials with company names, company logos, part numbers, telephone numbers, or almost any custom layout is available



STEM TYPES

- The 304 Series Stainless Steel stem is welded at the tip and case for hermetic seal
- 1/4" (6.35 mm) diameter is standard for lengths up to 24" (609 mm)
- 3/8" diameter, sharp tip options and optional 316SS wetted parts are also available

Platinum Resistance Temperature Transmitter



800 SERIES

- Proven 100 Ω platinum resistance sensor provides reliability, stability and unbeatable performance
- Economical price
- Standard temperature ranges from -40 °F to 120 °F through 50 °F to 400 °F
- Wide variety of temperature ranges and connections
- Quick response time
- 316 Stainless Steel housing
- Burnout protection from 3.3 mA to 23 mA
- Also available with our 1800 Series attachable loop indicator

APPLICATIONS

- Water systems
- Storage tanks
- Industrial machinery and machine tools
- HVAC systems
- Refrigeration systems



Also available with our 1800 Series attachable loop indicator.
See www.noshok.com for details.

SPECIFICATIONS	
Output signals	4 mA to 20 mA 2-wire, 0 Vdc to 5 Vdc 3-wire 0 Vdc to 10 Vdc 3-wire, 1 Vdc to 5 Vdc 3-wire
Temperature ranges	Standard ranges from -40 °F to 400 °F
Accuracy	
Measuring element	Class B per EN 60751 (IEC 751)
Output	±[0.30 +0.005*|t|] °C ±0.5% full scale
Sensor protection	Burnout protected from 3.3 mA to 23 mA
Power requirement*	10 Vdc to 30 Vdc (4 mA to 20 mA, 2-wire) 10 Vdc to 30 Vdc (0 Vdc to 5 Vdc, 3-wire) 10 Vdc to 30 Vdc (1 Vdc to 5 Vdc, 3-wire) 14 Vdc to 30 Vdc (0 Vdc to 10 Vdc, 3-wire)
Load limitations	≤ (VPower -10)/0.020 Amp for 4 mA to 20 mA output ≤ 5,000 Ω for 1 Vdc to 5 Vdc output ≤ 10,000 Ω for 0 Vdc to 10 Vdc output ≤ 4,500 Ω for 0.5 Vdc to 4.5 Vdc output
Wetted materials	316 Stainless Steel
Housing material	316 Stainless Steel
Max. operating pressure	6 mm: 725 psi 8 mm: 1,500 psi
Ambient temperature	-40 °F to 185 °F (-40 °C to 85 °C)
Storage temperature	-40 °F to 185 °F (-40 °C to 85 °C)
Environmental protection	IP65 according to EN 60529/IEC 529
Electromagnetic rating	Built to suppress RFI, EMI and ESD protection
Electrical protection	Reverse polarity, over-voltage and short circuit protection
Weight	Approximately 4 oz.

* Unregulated

Thermowells are recommended for pressure, corrosive fluids and high velocity applications, see pages 48-50.

⚠ **WARNING:** This product can expose you to chemicals including Lead and Nickel, which are known to the State of California to cause cancer and birth defects or other reproductive harm. For more information go to www.P65Warnings.ca.gov

Adaptive Industrial Solutions | sales@adaptiveind.com | (877) 818-5009

ORDERING INFORMATION						
SERIES	**800**					
TEMPERATURE RANGES	**-40/120**	-40 °F to 120 °F	**0/200**	0 °F to 200 °F	**25/125**	25 °F to 125 °F
	0/100	0 °F to 100 °F	**0/250**	0 °F to 250 °F	**50/300**	50 °F to 300 °F
	0/140	0 °F to 140 °F	**20/240**	20 °F to 240 °F	**50/400**	50 °F to 400 °F
ACCURACY	**1**	Class B + (±0.5% BFSL)				
OUTPUT SIGNALS	**1**	4 mA to 20 mA, 2-wire	**3**	1 Vdc to 5 Vdc, 3-wire		
	2	0 Vdc to 5 Vdc, 3-wire	**5**	0 Vdc to 10 Vdc, 3-wire		
PROCESS CONNECTIONS	**2**	1/4″ NPT Male			**48**	1/2″ NPT Male w/adjustable compression fitting
	8	1/2″ NPT Male				
ELECTRICAL CONNECTIONS	**1**	DIN EN 175301-803 Form A with 36″ cable			**14**	DIN EN 175301-803 Form A with ISO 4400 1/2" NPT female conduit
	8	DIN EN 175301-803 Form A			**25**	M12 x 1 (4-pin)
STEM LENGTHS	**025**	2.5"			**060**	6" **120** 12"
	040	4"			**090**	9"
STEM DIAMETERS	**6**	6 mm			**8**	8 mm

Please consult your local NOSHOK Distributor or NOSHOK, Inc. for availability and delivery information.

EXAMPLE

800 – 50/300 – 1 – 1 – 8 – 8 – 040 – 6

Series 800
Temperature range ..... 50 °F to 300 °F
Accuracy ..... ±0.5% BFSL
Output signal ..... 4 mA to 20 mA, 2-wire
Process connection ..... 1/2″ NPT Male
Electrical connection ..... DIN EN 175301-803 Form A
Stem length ..... 4"
Stem diameter ..... 6 mm

800 Series Platinum Resistance Temperature Transmitter

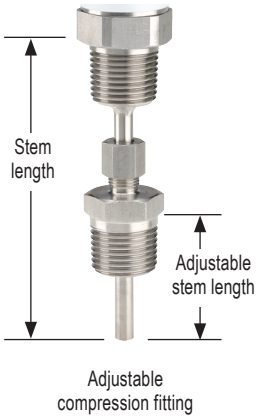



Load Limitations 4 mA to 20 mA output		
Vmin	=	10V + (.020 x RL)
RL	=	Loop resistance (Ω) RL = RS + RW
RS	=	Sensor resistance (Ω)
RW		Wire resistance (Ω)

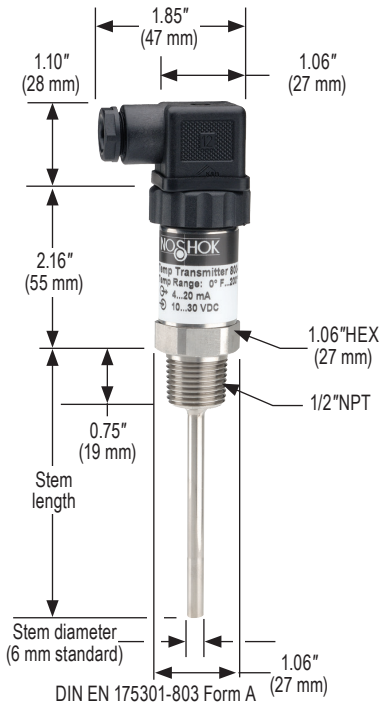

800 Series	4 mA to 20 mA	
CONNECTION TYPE (CODE)	V+	V-
DIN EN 175301-803 Form A (8 or 14)	1	2
DIN EN 175301-803 Form A w/ Cable (1)	Red	Black
M12 x 1, 4-Pin (25)	1	3

800 Series	0-10 Vdc		
CONNECTION TYPE (CODE)	V+	COMMON	OUTPUT
DIN EN 175301-803 Form A (8 or 14)	1	2	3
DIN EN 175301-803 Form A w/ Cable (1)	Red	Black	White
M12 x 1, 4-Pin (25)	1	3	4

Compact Temperature Transmitter



810 SERIES

- Proven PT1000 platinum resistance sensor provides reliability, stability and unbeatable performance
- Standard temperature ranges from -22 °F to 302 °F (-30 °C to 150°C)
- 4 mA to 20 mA transmitter included
- 316 Stainless Steel housing
- CE compliant to suppress RFI, EMI, and ESD
- RoHS compliant

APPLICATIONS

- Mobile hydraulics
- Automotive
- Heat exchangers
- HVAC
- Transportation
- Refrigeration controls

SPECIFICATIONS		
Output signal	4 mA to 20 mA, 2-wire	
Temperature ranges	Standard ranges from -22 °F to 302 °F (-30 °C to 150°C)	
Accuracy	Measuring element	PT1000 Class A
	Temperature sensor	For °F: ±[1.8*(0.15 + 0.002 (t - 32) / 1.8)] For °C: ±(0.15 K + 0.002 I t I) per EN 60751
	Accuracy [1, 2]	± 0.80 °F (+- 0.45 °C)
Failure signal	Sensor burnout	≥ 21.0 mA
	Sensor short circuit	≤ 3.6 mA
Power requirement*	10 Vdc to 30 Vdc	
Environmental temperature affect	0.1% of span / 18 °F (10 °C)	
Load limitations	≤(Supply Voltage - 10 Volts)/0.023 A	
Wetted materials	316 Stainless Steel	
Housing material	316 Stainless Steel	
Ambient temperature	-40°F to 185 °F (-40°C to 85 °C)	
Storage temperature	-40°F to 185 °F (-40°C to 85 °C)	
Electromagnetic rating	CE compliant to EMC norm EN 61326 RFI, EMI and ESD protection	
Electrical protection	Reverse polarity, over-voltage and short circuit protection	
Max. operating pressure	3,915 psi (270 bar) [3]	
Environmental protection	IP67	

* Unregulated

[1] Maximum uncertainty calculated @ maximum span, maximum measurement temperature, and ambient temperature

[2] Maximum uncertainty includes Usensing element, Usensor measurement, Uoutput linearization

[3] Pressure rating may vary based on the process medium, temperature and flow rate

Thermowells are recommended for pressure, corrosive fluids and high velocity applications, see pages 46-48.

⚠ **WARNING:** This product can expose you to chemicals including Lead and Nickel, which are known to the State of California to cause cancer and birth defects or other reproductive harm. For more information go to www.P65Warnings.ca.gov

ORDERING INFORMATION						
SERIES	**810**					
TEMPERATURE RANGES	**-22/125**	-22 °F to 125 °F	**-22/302**	-22 °F to 302 °F	**0/200**	0 °F to 200 °F
	-22/250	-22 °F to 250 °F	**0/100**	0 °F to 100 °F	**0/300**	0 °F to 300 °F
	(L/H) Custom ranges available on request, specify low and high ranges (70 °F minimum span)					
ACCURACY	**1**	PT1000 Class A ±0.8 °F (±0.45 °C)				
OUTPUT SIGNAL	**1**	4 mA to 20 mA, 2-wire				
PROCESS CONNECTIONS	**2**	1/4″ NPT Male	**8**	1/2″ NPT Male		
ELECTRICAL CONNECTION	**25**	M12 x 1 (4-pin)				
STEM LENGTHS	**010**	1"	**030**	3"	**080**	8"
	020	2"	**040**	4"	**120**	12"
	025	2.5"	**060**	6"	**140**	14"
STEM DIAMETER	**6**	6 mm				

Please consult your local NOSHOK Distributor or NOSHOK, Inc. for availability and delivery information.

EXAMPLE

810 – -22/125 – 1 – 1 – 2 – 25 – 020 – 6

Series 810
Temperature range ..... -22 °F to 125 °F
Accuracy .....PT1000 Class A ±0.8 °F (±0.45 °C)
Output signal ..... 4 mA to 20 mA, 2-wire
Process connection ..... 1/4″ NPT Male
Electrical connection ..... M12 x 1 (4-pin)
Stem length .....2"
Stem diameter ..... 6 mm

810 Series Compact Temperature Transmitter

1/2" NPT

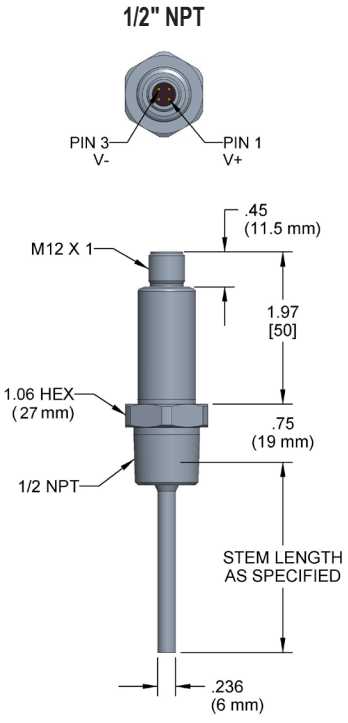

1/4" NPT

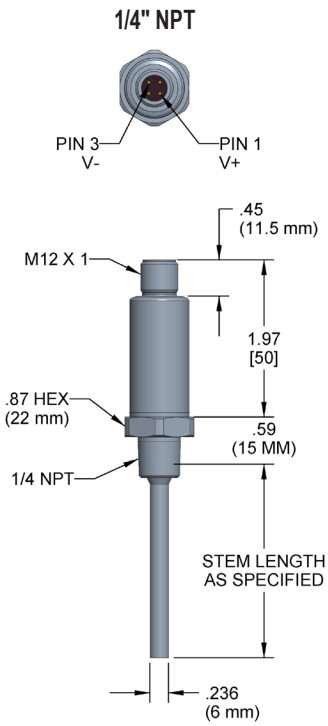

810 Series	4 mA to 20 mA	
CONNECTION TYPE (CODE)	V+	V-
M12 x 1, 4-Pin (25)	1	3

Load Limitations 4 mA to 20 mA output		
Vmin	=	10V + (.020 x RL)
RL	=	Loop resistance (Ω) RL = RS + RW
RS	=	Sensor resistance (Ω)
RW		Wire resistance (Ω)

Digital Temperature Indicators



APPLICATIONS

- Replacement for bimetal, liquid bulb and glass thermometers
- Pharmaceutical
- Food preparation
- Utilities and municipal refineries
- Chemical and petrochemical plants
- Paper mills
- Hydraulics

820/821 SERIES

- Large 4-digit LED display
- Field re-programmable with optional PC interface module and software
- Software includes a security feature to prevent accidental re-programming
- 4 mA to 20 mA programmable linearized output signal
- Utilizes a self-calibration feature for accurate and stable performance
- Optional fully programmable switch output; relay or transistor
- Utilizes a PT100 Ω RTD Class A element for temperature sensing
- M12 x 1 (5-pin) plug or 36" integral cable electrical connection
- IP 65 / NEMA 4 rated environmental protection
- All 316 Stainless Steel construction
- Easy installation with various mounting configurations

SPECIFICATIONS

Temperature ranges	Standard ranges from -325 °F to 1,100 °F (-200 °C to 600 °C) Customer rescalable with optional PC interface and software
Temperature sensor	RTD (PT100 DIN EN 60751, Class A)
Housing material	316 Stainless Steel
Probe material	316 Stainless Steel standard
Maximum pressure	500 psig (on probe)
Power requirement	9-36 Vdc, polarity protected
Supply effect	0.005%/V
Power consumption	15 mA @ 24 Vdc + output current – 950 mW max. 20 mA @ 24 Vdc for PNP output – 500 mW max. 20 mA @ 24 Vdc + sourcing current for NPN output 50 mA @ 24 Vdc for relay output – 1200 mW max.
Current output	4 mA to 20 mA (3-wire configuration) linear to temperature
Max load on current output	(Vsupply-9V) / 20 mA, Ω
Optional switching output	Relay SPDT 0.5A @ 240 Vac or Transistor NPN (max 100 mA source) or Transistor PNP (max 100 mA sink)
Optional switching logic	N.C. or N.O. software selectable
Optional switching ranges	Customer programmable between -325 °F to 1,100 °F (-200 °C to 600 °C)
Isolation	500 Vdc input /output (between probe and output signal)
Electrical connection	M12 x 1 (5-pin) or integral cable
Hysteresis	1% of range standard; customer programmable optional
Accuracy	≤0.22% full scale; ≤0.1% full scale optional
Open circuit detection	Upscale (22 mA) or downscale (2.5 mA) current output. Error message on LED display
Warm-up	30 seconds
Response time	0.5 sec to 30 sec (software selectable)
Display	4-digit LED, decimal point selectable by software
Display resolution	±0.02% F.S. ±1 digit
RFI effect	1% or less typical
Temperature ranges	Ambient -40 °F to 176 °F (-40 °C to 80 °C) Effect <0.01% FS/ °C Storage -58 °F to 185 °F (-50 °C to 85 °C)
Environmental protection	NEMA 4/ IP 65

Thermowells are recommended for pressure, corrosive fluids and high velocity applications, see pages 48-50.

⚠ **WARNING:** This product can expose you to chemicals including Lead and Nickel, which are known to the State of California to cause cancer and birth defects or other reproductive harm. For more information go to www.P65Warnings.ca.gov

Adaptive Industrial Solutions | sales@adaptiveind.com | (877) 818-5009

ORDERING INFORMATION								
SERIES	**820**	Bottom connection	**821**	Back connection				
ACCURACY	**1**	≤0.22% full scale	**2**	≤0.1% full scale				
OUTPUT	**1**	4 mA to 20 mA						
BURNOUT	**U**	Upscale	**D**	Downscale				
PROCESS CONNECTIONS	**0**	None	**8**	1/2" NPT Male				
	2	1/4" NPT Male	**48**	1/2" NPT Male w/sliding compression fitting*				
TEMPERATURE RANGES	**-50/120**	-50 °F to 120 °F	**-50/400**	-50 °F to 400 °F	**32/200**	32 °F to 200 °F	**32/400**	32 °F to 400 °F
	-50/300	-50 °F to 300 °F	**32/120**	32 °F to 120 °F	**32/300**	32 °F to 300 °F		
ELECTRICAL CONNECTIONS	**36**	Integral cable 36"	**48**	M12 x 1 (5-pin)				
STEM LENGTHS	**025**	2.5"	**060**	6"	**120**	12"	**180**	18"
	040	4"	**090**	9"	**150**	15"	**240**	24"
STEM DIAMETERS	**2**	1/4"	**3**	3/8"	**4**	1/2"	**6**	6 mm

Please consult your local NOSHOK Distributor or NOSHOK, Inc. for availability and delivery information.

* Add 2" to stem length for this option.

EXAMPLE

820 – 1 – 1 – D – 8 – 32/200 – 48 – 090 – 6

Series ..... 820 Bottom connection
Accuracy ..... ≤0.22% full scale
Output ..... 4 mA to 20 mA
Burnout ..... Downscale
Process connection ..... 1/2" NPT Male
Temperature range ..... 32 °F to 200 °F
Electrical connection ..... M12 x 1 (5-pin)
Stem length ..... 9"
Stem diameter ..... 6 mm

820 Series

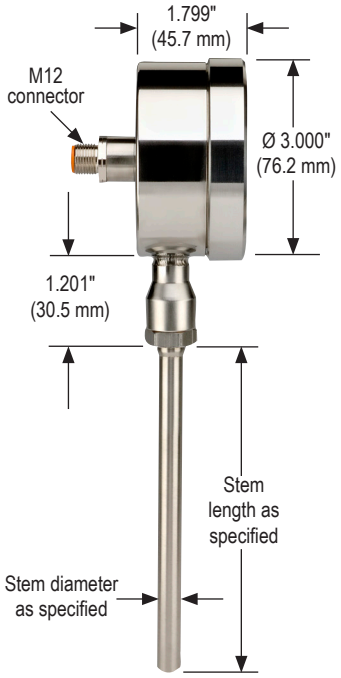

821 Series

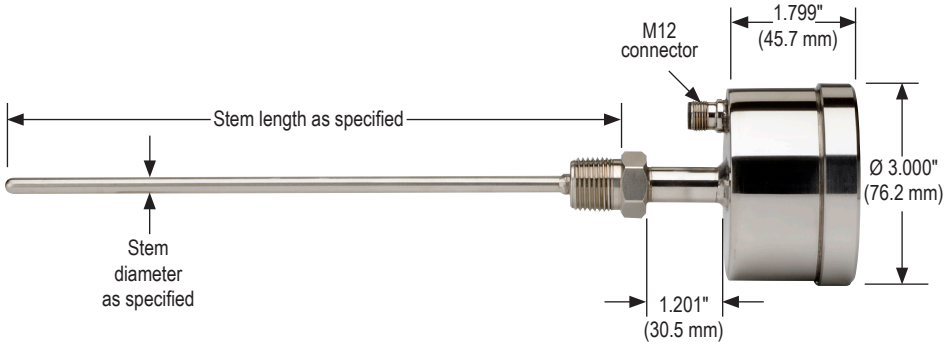

Digital Temperature Indicators, Battery Powered



822/823 SERIES

- 5 year minimum battery life
- Large 4-digit LCD display
- Utilizes a PT100 Ω RTD Class A element for temperature sensing
- IP 65 / NEMA 4 rated environmental protection
- All 316 Stainless Steel construction
- Easy installation with various mounting configurations

APPLICATIONS

- Replacement for bimetal, liquid bulb and glass thermometers
- Pharmaceutical
- Food preparation
- Utilities and municipal refineries
- Chemical and petrochemical plants
- Paper mills
- Hydraulics

SPECIFICATIONS	
Temperature ranges	Standard ranges from -58 °F to 392 °F (-50 °C to 200 °C)
Temperature sensor	RTD (PT100 DIN EN 60751, Class A)
Housing material	316 Stainless Steel
Probe material	316 Stainless Steel standard
Maximum pressure	500 psig (on probe)
Power requirement	Lithium battery (3.6 V)
Supply effect	0.005%/V
Accuracy	≤0.22% full scale; ≤0.1% full scale optional
Display	4-digit LCD
Display resolution	±0.02% F.S. ±1 digit
RFI effect	1% or less typical
Temperature ranges	Ambient -40 °F to 176 °F (-40 °C to 80 °C) Effect <0.01% FS/ °C Storage -58 °F to 185 °F (-50 °C to 85 °C)
Environmental protection	NEMA 4/ IP 65

Thermowells are recommended for pressure, corrosive fluids and high velocity applications, see pages 48-50.

⚠ **WARNING:** This product can expose you to chemicals including Lead and Nickel, which are known to the State of California to cause cancer and birth defects or other reproductive harm. For more information go to www.P65Warnings.ca.gov

Adaptive Industrial Solutions | sales@adaptiveind.com | (877) 818-5009

ORDERING INFORMATION								
SERIES	**822**	Bottom connection	**823**	Back connection				
ACCURACY	**1**	≤0.22% full scale	**2**	≤0.1% full scale				
PROCESS CONNECTIONS	**0**	None	**8**	1/2" NPT Male				
	2	1/4" NPT Male	**48**	1/2" NPT Male w/sliding compression fitting*				
TEMPERATURE RANGE	**-58/392**	-58 °F to 392 °F	**-50/200C**	-50 °C to 200 °C				
STEM LENGTHS **	**025**	2.5"	**060**	6"	**120**	12"	**180**	18"
	040	4"	**090**	9"	**150**	15"	**240**	24"
STEM DIAMETERS	**2**	1/4"	**4**	1/2"	**8**	8 mm		
	3	3/8"	**6**	6 mm				

Please consult your local NOSHOK Distributor or NOSHOK, Inc. for availability and delivery information.

* Add 2" to stem length for this option.

** Consult factory for additional stem length options.

EXAMPLE

822 – 1 – 8 – -58/392 – 090 – 6

Series ..... 822 Bottom connection
Accuracy ..... ≤0.22% full scale
Process connection ..... 1/2" NPT Male
Temperature range ..... -58 °F to 392 °F
Stem length ..... 9"
Stem diameter ..... 6 mm

822 Series

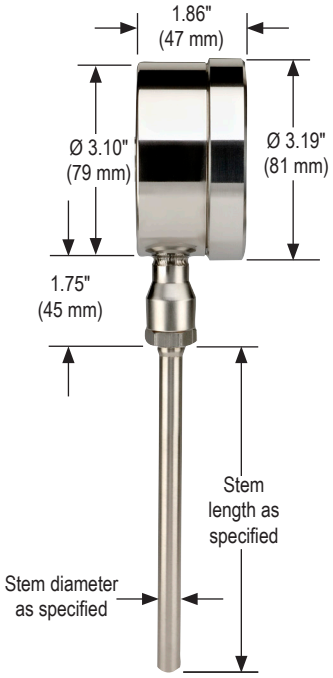

823 Series

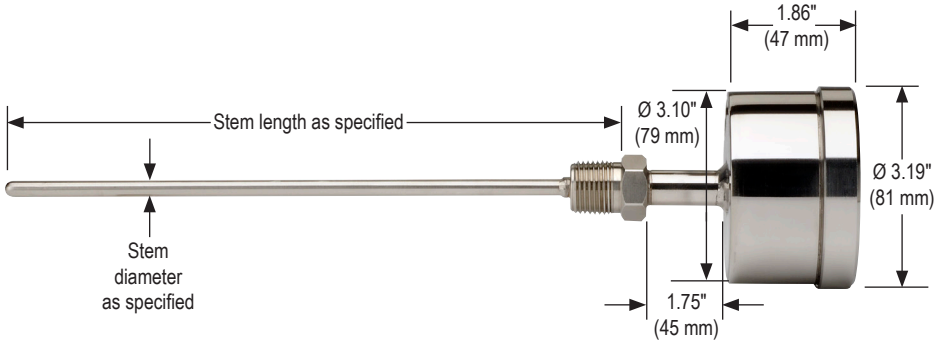

Electronic Indicating Temperature Transmitter/Switch



850 SERIES

- Utilizes PT1000 technology for continuous temperature monitoring, electronic temperature switching, and transmission of analog output while providing local digital indication
- Allows for one or two switching outputs as well as optional current and voltage outputs
- Three buttons on top allow simple adjustment of the temperature set points, reset points, switching functions and the measuring range of the optional analog output
- 1/2" NPT Male standard connection
- A variety of stem lengths are available for maximum versatility; also available with adjustable insertion lengths via the sliding compression fitting
- Durable stainless steel housing and wetted parts
- Display and electrical connection can be rotated independently
- RoHS compliant

APPLICATIONS

- Mechanical engineering
- Heating and cooling circuits
- Air conditioning technology
- Plant construction
- Environmental technology

SPECIFICATIONS

Temperature ranges	Standard -4 °F to 176 °F (-20 °C to 80 °C) Optional -4 °F to 248 °F (-20 °C to 120 °C) Selectable display for °F or °C
Temperature sensor	Platinum resistor (PT1000 2-wire, DIN EN 60751 Class A)
Wetted materials	316Ti stainless steel
Housing material	304 Stainless steel
Max. operating pressure	2,000 psi (1/2" NPT Male fixed process connection); 725 psi (1/2" NPT Male sliding compression fitting process connection)
Power requirement*	15 Vdc to 35 Vdc
Signal output adjustment	Zero point: 0-25% of span Full scale: 75-100% of span
Switch points **Number** **Function** **Adjustment accuracy**	Individually adjustable via external control keys 1 or 2 (PNP) N.O. / N.C.; windows-and hysteresis function freely adjustable ≤ 0.5% of span
Switch rating	Max. 250 mA
Electrical connection	M12 x 1 (4-pin), M12 x 1 (5-pin)
Accuracy **Analog signal** **Switching output** **Display** **Temperature sensor**	 ≤ ±0.5% of span + temperature sensor error ≤ ±0.8% of span + temperature sensor error ≤ ±(0.8% of span + temperature sensor error) ±1 digit For °F: ±[1.8*(0.15 + 0.002 (t - 32) / 1.8)] For °C: ±(0.15 K + 0.002 I t I) per EN 60751
Display	14 segment-LED, red 4-digit, height 0.35"
Environmental protection	IP65 and IP67 (IEC 60529)

* Unregulated

Thermowells are recommended for pressure, corrosive fluids and high velocity applications, see pages 48-50.

WARNING: This product can expose you to chemicals including Lead and Nickel, which are known to the State of California to cause cancer and birth defects or other reproductive harm. For more information go to www.P65Warnings.ca.gov

Adaptive Industrial Solutions | sales@adaptiveind.com | (877) 818-5009

ORDERING INFORMATION

SERIES	**850**			
SWITCH FUNCTIONS	**1**	2 N.O. or 2 N.C. switch (PNP *)	**4**	2 N.O. or 2 N.C. switch (PNP*) with 4 mA to 20 mA 3-wire analog output **
	2	1 N.O. or 1 N.C. switch (PNP *) with 4 mA to 20 mA 3-wire analog output	**5**	2 N.O. or 2 N.C. switch (PNP*) with 0 Vdc to 10 Vdc 3-wire output) **
	3	1 N.O. or 1 N.C. switch (PNP *) with 0 Vdc to 10 Vdc 3-wire output		
PROCESS CONNECTIONS	**2**	1/4" NPT Male	**47**	1/4" NPT Male sliding compression fitting
	8	1/2" NPT Male	**48**	1/2" NPT Male sliding compression fitting
TEMPERATURE RANGES	**-4/176**	-4 °F to 176 °F (-20 °C to 80 °C)	**-4/248**	-4 °F to 248 °F (-20 °C to 120 °C) † **This range is available with sliding compression fitting ONLY)**
ELECTRICAL CONNECTION	**2**	M12 x 1 (4-pin)	**3**	M12 x 1 (5-pin) ††
STEM LENGTHS	**010**	1" ***	**040**	4" **120** 12"
	020	2" ***	**060**	6" **140** 14"
	025	2.5" ***	**090**	9"
STEM DIAMETERS	**6**	6 mm		

Please consult your local NOSHOK Distributor or NOSHOK, Inc. for availability and delivery information.

* NPN available, consult factory
** Available only with M12 x 1 (5-pin) connector
*** Not available with sliding compression fitting
† Available only with sliding compression fitting process connection and stem lengths ≥4"
†† Switch function 4 and 5 only

EXAMPLE

850 – 1 – 2 – -4/176 – 2 – 040 – 6

Series 850
Switch function ..... 2 N.O. or 2 N.C. (PNP)
Process connection ..... 1/4" NPT Male
Temperature range ..... -4 °F to 176 °F
Electrical connection ..... M12 x 1 (4-pin)
Stem length ..... 4"
Stem diameter ..... 6 mm

850 Series

Tapered Thread

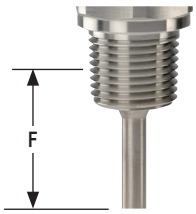

F								
in	1	2	2.5	4	6	9	12	14

Sliding Compression Fitting with Tapered Thread

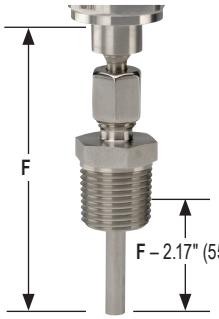

F					
in	4	6	9	12	14

1 switching output (M12 x 1) with 4 mA to 20 mA signal ††

p-switching

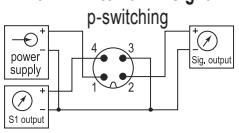

2 switching output (M12x1) with 4 mA to 20 mA signal ††

p-switching

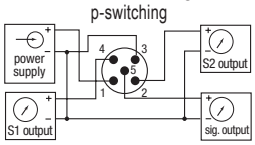

2 switching output (M12 x 1)

p-switching

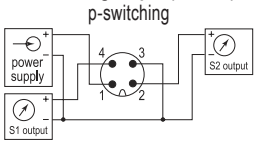

†† Also applies to 0 Vdc to 10 Vdc output

Dimensions inches (mm) with circular connector M12 x 1 (4-pin and 5-pin)

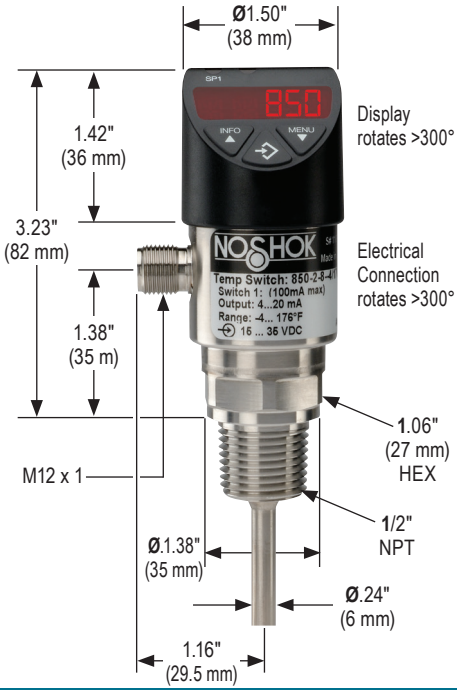

Industrial RTD, Probe Type



900 SERIES

- General purpose RTD probe with PVC or PTFE lead wires
- Adjustable and welded fittings available
- Ideal for OEM applications
- PVC or PTFE jacketed lead wires are available
- A variety of fitting sizes and probe diameters are available
- RTD PT100 Ω standard, others available
- 2, 3 or 4-wire circuit types
- Isolation to 500 Vdc
- Custom designs available

SPECIFICATIONS	
Temperature ranges	-50 °F to 400 °F (-50 °C to 200 °C) -50 °F to 750 °F (-50 °C to 400 °C) -330 °F to 1,100 °F (-200 °C to 600 °C)
Sheath material	316 Stainless Steel
Finish (standard)	32 micro-inches maximum
Pressure rating	500 psi (34.5 bar), tube only
RTD element	PT100 Ω @ 32 °F (0 °C), α=0.00385 IEC 751
Lead wires	Stranded 22 AWG standard, PVC or PTFE insulation
Self-heating	50 mW / °C typical in moving water
Insulation resistance	Single element probes: 100 mega Ω/min. at 500 Vdc, leads to case Dual element probes: 100 mega Ω/min. at 100 Vdc, between element and leads to case
Transition	Sheath to wire transition max. temperature 266 °F (130 °C)

APPLICATIONS

- Chemical processing
- Textile production
- Automotive
- Plastics processing
- HVAC

Thermowells are recommended for pressure, corrosive fluids and high velocity applications, see pages 48-50.

⚠ **WARNING:** This product can expose you to chemicals including Lead and Nickel, which are known to the State of California to cause cancer and birth defects or other reproductive harm. For more information go to www.P65Warnings.ca.gov

ORDERING INFORMATION						
SERIES	**900**					
TEMPERATURE RANGES	**-50/400**	-50 °F to 400 °F	**-330/1100**	-330 °F to 1,100 °F		
	-50/750	-50 °F to 750 °F				
ACCURACIES	**1**	±0.12% (±0.3 °C) at 0 °C, Class B	**3**	±0.04% (±0.1 °C) at 0 °C, Class AA		
	2	±0.06% (±0.15 °C) at 0 °C, Class A				
ELEMENT TYPES	**C**	PT100 Ω at 0 °C	**M**	PT1000 Ω at 0 °C		
CIRCUIT TYPES	**1**	Single, 2-wire	**3**	Single, 4-wire	**5**	Dual, 3-wire
	2	Single, 3-wire	**4**	Dual, 2-wire	**6**	Dual, 4-wire
PROCESS CONNECTIONS	**0**	None	**8**	1/2" NPT Male		
	1	1/8" NPT Male	**48**	1/2" NPT Male w/sliding compression fitting **		
	2	1/4" NPT Male	**61**	Spring loaded 1/2" NPT **, ***		
ELECTRICAL CONNECTIONS	**6**	1/2" NPT conduit with 36" cable	**48**	M12 x 1 (5-pin) *		
	36	Integral cable 36"	**49**	3-pin RTD plug		
	37	1/2" NPT conduit with 6" flying leads	**50**	M12 x 1 (8-pin)		
STEM LENGTHS	**025**	2.5"	**090**	9"	**180**	18"
	040	4"	**120**	12"	**240**	24"
	060	6"	**150**	15"		
STEM DIAMETERS	**1**	1/8"	**3**	3/8"	**6**	6 mm
	2	1/4"	**4**	1/2"		

Please consult your local NOSHOK Distributor or NOSHOK, Inc. for availability and delivery information.

* Single circuit types only

** Add 2" to stem length for this option. If installing with thermowells, Process Connection option 48 or 61 must be selected.

*** Only available with Electrical Connection options 6 & 37

EXAMPLE

900 – -50/750 – 2 – C 2 – 0 – 49 – 060 – 6

Series 900
Temperature range ..... -50 °F to 750 °F
Accuracy ..... ±0.06% (±0.15 °C) at 0 °C, Class A
Element type ..... PT100 Ω at 0 °C
Circuit type ..... Single, 3-wire
Process connection ..... None
Electrical connection ..... 3-pin RTD plug
Stem length ..... 6"
Stem diameter ..... 6 mm

1/2" Conduit With Cable | **M12 x 1 (5-pin)** | **Integral Cable 36"** | **1/2" NPT w/Flying Leads** | **RTD Plug**

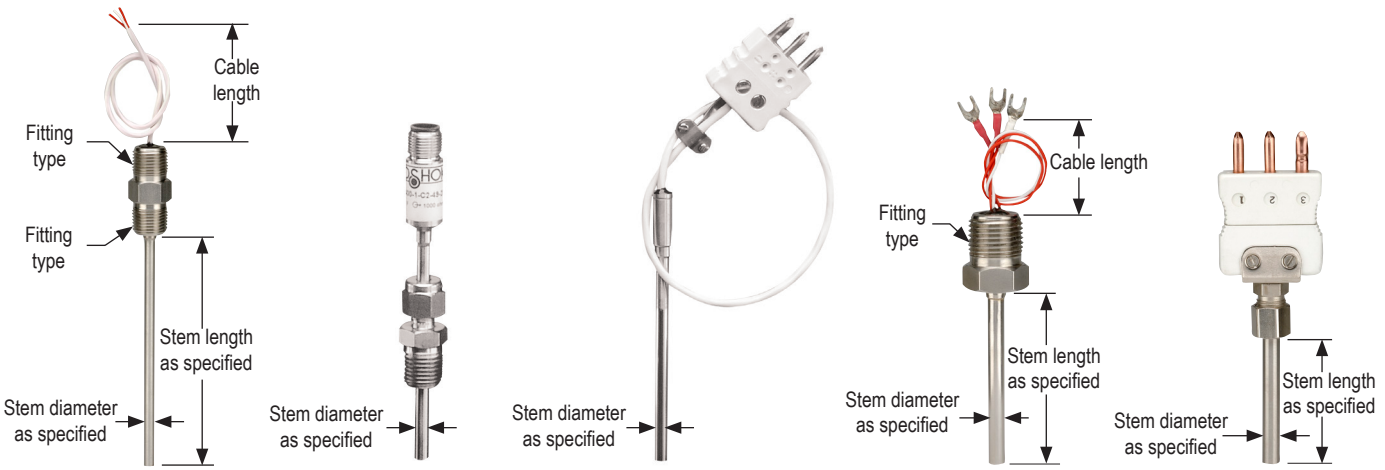

Industrial RTD, Probe Type with Connection Head



Select Connection Heads
Available with CSA/FM Approvals

910/915 SERIES

- Standard head-type RTD assembly
- A variety of head types are available
- Factory Mutual and Canadian Standards approved explosion proof models available
- Transmitter available, fits standard heads
- Probe welded to fitting or spring loaded
- If used in conjunction with a thermowell, probe can be replaced in some models without possibility for leakage
- Process fitting 1/2" NPT standard, others available
- RTD PT100 Ω standard, others available
- 2, 3 or 4-wire circuit types
- Isolation to 500 Vdc

SPECIFICATIONS	
Temperature ranges	-50 °F to 400 °F (-50 °C to 200 °C) -50 °F to 750 °F (-50 °C to 400 °C) -330 °F to 1,100 °F (-200 °C to 600 °C)
Sheath material	316 Stainless Steel
Finish (standard)	32 micro-inches maximum
Pressure rating	500 psi (34.5 bar), tube only
RTD element	PT100 Ω @ 32 °F (0 °C), α=0.00385 IEC 751
Lead wires	Stranded 22 AWG standard, PVC or PTFE insulation
Self-heating	50 mW / °C typical in moving water
Insulation resistance	Single element probes: 100 mega Ω/min. at 500 Vdc, leads to case Dual element probes: 100 mega Ω/min. at 100 Vdc, between element and leads to case
Environmental protection	A1/A2: NEMA 4 P1 & S1/S2: NEMA 4X
Transition	Sheath to wire transition max. temperature 266 °F (130 °C)

APPLICATIONS

- Industrial boilers
- Petrochemical
- Exhaust gas monitoring
- Food processing

Thermowells are recommended for pressure, corrosive fluids and high velocity applications, see pages 48-50.

⚠ **WARNING:** This product can expose you to chemicals including Lead and Nickel, which are known to the State of California to cause cancer and birth defects or other reproductive harm. For more information go to www.P65Warnings.ca.gov

ORDERING INFORMATION

SERIES	**910**	Fixed RTD	**915**	Spring-loaded RTD		
TEMPERATURE RANGES	**-50/400**	-50 °F to 400 °F	**-330/1100**	-330 °F to 1,100 °F		
	-50/750	-50 °F to 750 °F				
ACCURACIES	**1**	±0.12% (±0.3 °C) at 0 °C, Class B	**3**	±0.04% (±0.1 °C) at 0 °C, Class AA		
	2	±0.06% (±0.15 °C) at 0 °C, Class A				
ELEMENT TYPES	**C**	PT100 Ω at 0 °C	**M**	PT1000 Ω at 0 °C		
CIRCUIT TYPES	**1**	Single, 2-wire	**3**	Single, 4-wire	**5**	Dual, 3-wire
	2	Single, 3-wire	**4**	Dual, 2-wire	**6**	Dual, 4-wire
OPTIONAL TRANSMITTER/ OUTPUT	**1U**	4 mA to 20 mA, 2-wire, upscale burnout	**3**	1 Vdc to 5 Vdc, 3-wire		
	1D	4 mA to 20 mA, 2-wire, downscale burnout	**5**	0 Vdc to 10 Vdc, 3-wire		
	2	0 Vdc to 5 Vdc, 3-wire				
PROCESS CONNECTIONS	**0**	None	**8**	1/2" NPT Male		
	1	1/8" NPT Male	**48**	1/2" NPT Male w/sliding compression fitting **		
	2	1/4" NPT Male				
ELECTRICAL CONNECTIONS	**23**	Connection head w/ 1/2" NPT conduit	**45**	Connection head with 3/4" NPT conduit		
ELECTRICAL CONNECTION MATERIALS	**A1**	Aluminum cast	**P1**	PP, white	**S2**	Stainless Steel cast, explosion proof*
	A2	Aluminum cast, explosion proof*	**S1**	Stainless Steel cast		
STEM LENGTHS	**025**	2.5"	**090**	9"	**180**	18"
	040	4"	**120**	12"	**240**	24"
	060	6"	**150**	15"		
STEM DIAMETERS	**1**	1/8"	**3**	3/8"	**6**	6 mm
	2	1/4"	**4**	1/2"		

Please consult your local NOSHOK Distributor or NOSHOK, Inc. for availability and delivery information.

* Factory Mutual and Canadian Standards approved explosion proof Class I, Division I, Groups B, C and D; Class II, Division I, Groups E, F and G

** Add 2" to stem length for this option. If installing with thermowells, Process Connection option 48 must be selected.

EXAMPLE

910 – -330/1100 – 1 – M 4 – 8 – 23 S1 – 120 – 3

Series 910
Temperature range ..... -330 °F to 1,100 °F
Accuracy ..... ±0.12% (±0.3 °C) at 0 °C, Class B
Element type ..... PT1000 Ω at 0 °C
Circuit type ..... Dual, 2-wire
Process connection ..... 1/2" NPT Male
Electrical connection ..... Connection head w/1/2" NPT conduit
Electrical connection material ..... Stainless Steel cast
Stem length ..... 12"
Stem diameter ..... 3/8"

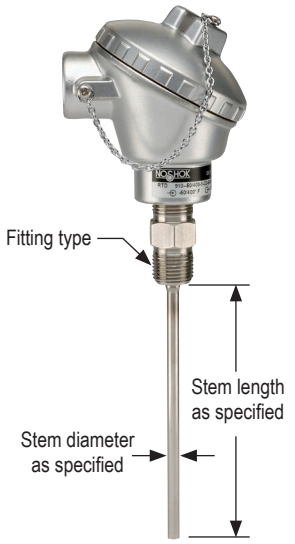

Aluminum Cast (A1/A2)	Polypropylene (P1)	Stainless Steel Cast (S1/S2)
NEMA 4	NEMA 4X	NEMA 4X

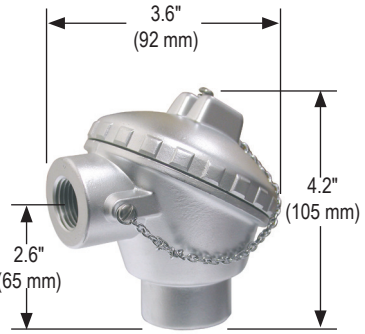

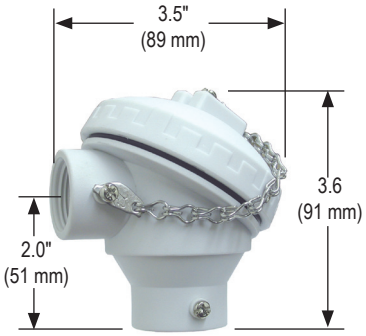

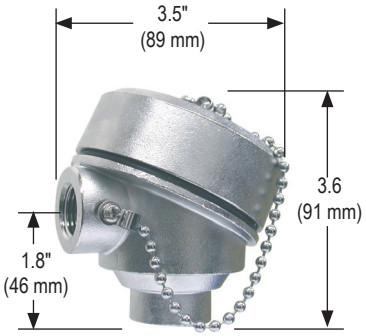

RTD Transmitter

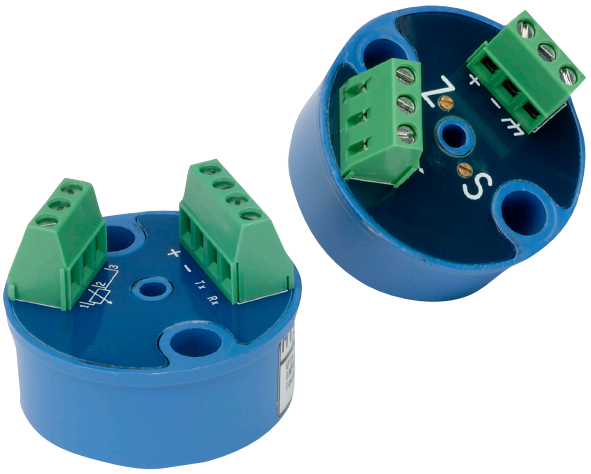

920 SERIES

RTD TRANSMITTERS

- High accuracy (±0.1%)
- 2-wire loop-powered 4 mA to 20 mA output
- Linearized output to temperature
- Input RTD PT100 with 3-wire compensation
- Analog design, potentiometer adjustable
- Factory calibrated for fixed range
- Metal housing
- Fits standard heads
- Optional model is fully field re-programmable with module and PC-based software

ORDERING INFORMATION					
SERIES	**920**				
TYPE	**NRT**	Head-mounted			
INPUT	**2**	PT-100, 3-wire			
OUTPUTS	**1**	4 mA to 20 mA, 2-wire	**2**	0 Vdc to 5 Vdc, 3-wire	**5** 0 Vdc to 10 Vdc, 3-wire
CALIBRATED TEMPERATURE RANGE	**Please specify low/high**				
UNITS OF MEASURE	**C**	Celsius	**F**	Fahrenheit	
OPTIONS	**0**	None	**PC***	Computer Programmable	

Special configurations available on request, please consult your local NOSHOK Distributor or NOSHOK, Inc. for availability and delivery information.

*Requires program module and software, 4 mA to 20 mA only

EXAMPLE **920 – NRT – 2 – 1 – 0/200 – F – 0**

- **Series** 920
- **Type** ..... RTD transmitter
- **Input** PT100, 3-wire
- **Output** ..... 4 mA to 20 mA, 2-wire
- **Calibrated range** ..... 0 to 200
- **Units of measure** ..... Fahrenheit
- **Options** ..... None

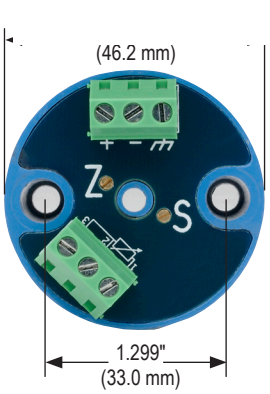

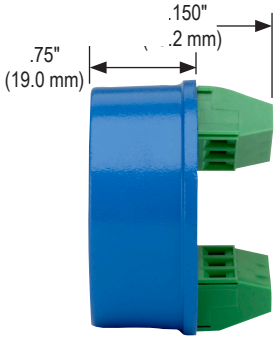

@Vnom = 24 Vdc, **T.ambient** = 25 °C, **Span nom.** = 100 °C

SPECIFICATIONS	
Housing material	Die-cast zinc, enamel painted
Housing dimensions	1.82" dia. x 1.15" H
Input	PT100, 3-wire, α=0.00385, DIN EN 60751
Output	4 mA to 20 mA loop powered or voltage, linear to temperature
Power requirement	12-32 Vdc, polarity protected
Supply effect	0.02%/V, 0.001%/V with computer programmable version
Zero drift	±0.01% FS/ °C
Span drift	±0.01% FS/ °C
Long term drift	≤ 0.5% FS/year
Excitation current RTD	0.8 mA
Sensor lead resistance RTD	500 Ω max.
Accuracy[1]	0.1% FS (includes effects of linearity, hysteresis and repeatability)
Span/zero adjustment	20 turn potentiometer, ±10% for zero and span
Maximum loop resistance	Rmax. = [(Vsupply – 9 Vdc) / 20 mA
Open circuit detection	Overscale limit (27.0 mA) or underscale limit (2.2 mA)
Warm up	30 seconds
Temperature ranges	Ambient -40 °F to 176 °F (-40 °C to 80 °C) Storage -40 °F to 176 °F (-40 °C to 80 °C)

[1] Max. error on complete span. Error at calibration point ≤ 0.1 °C.

WARNING: This product can expose you to chemicals including Lead and Nickel, which are known to the State of California to cause cancer and birth defects or other reproductive harm. For more information go to www.P65Warnings.ca.gov

RTD Accessories

RTD CONNECTION HEADS

- Screw cover
- Meet NEMA requirements for indoor or outdoor use providing protection against dust, rain, splashing and hose-directed water
- Easy access, one-turn caps
- Accept standard and DIN terminal blocks and transmitters
- Provide greater volume for ease of field wiring



ORDERING INFORMATION					
SERIES	**900**				
TYPE	**RCH**	RTD connection head			
MATERIALS	**A1**	Aluminum, general service	**P1**	PP (white), general service	**S2** Stainless Steel, explosion proof *
	A2	Aluminum, explosion proof*	**S1**	Stainless Steel, general service	
INSTRUMENT CONNECTION	**04**	1/2" NPT Female			
ELECTRICAL CONNECTIONS	**04**	1/2" NPT Female conduit	**06**	3/4" NPT Female conduit	

Special configurations available on request, please consult your local NOSHOK Distributor or NOSHOK, Inc. for availability and delivery information.

* Explosion proof Class I, Division I, Groups B, C and D; Class II, Division I, Groups E, F and H

EXAMPLE **900 – RCH – S1 – 04 – 06**

Series 900
Type ..... RTD connection head
Material ..... Stainless Steel, general service
Process connection ..... 1/2" NPT Female
Electrical connection ..... 3/4" NPT Female conduit

RTD TERMINAL BLOCKS

- Provided with a steatite ceramic base, Brass terminal pieces, and Stainless Steel screws
- Not rated for high voltage use
- Can be used in temperature sensor or low voltage Class 2 circuits



ORDERING INFORMATION				
SERIES	**900**			
TYPE	**RTB**	RTD terminal block		
MATERIALS	**B**	Bakelite	**C**	Ceramic
CONFIGURATIONS	**2**	2 position	**4**	4 position
	3	3 position	**6**	6 position

Special configurations available on request, please consult your local NOSHOK Distributor or NOSHOK, Inc. for availability and delivery information.

EXAMPLE **900 – RTB – C – 2**

Series 900
Type ..... RTD terminal block
Material ..... Ceramic
Configuration ..... 2 position

For products that contain Brass or Carbon Steel:

WARNING: This product can expose you to chemicals including Lead, which is known to the State of California to cause cancer and birth defects or other reproductive harm. For more information go to www.P65Warnings.ca.gov

For products that contain Stainless Steel:

WARNING: This product can expose you to chemicals including Nickel, which is known to the State of California to cause cancer. For more information go to www.P65Warnings.ca.gov

Thermowells



50/75/100 SERIES

- Allows a temperature instrument to be removed and replaced without shutting down and draining the process
- Reduces the possibility of damage to the temperature instrument
- Provides protection to the operator
- 1/2" NPSM instrument connection, 3/4" NPT process connection standard - 1/2" NPT, 1" NPT, flanged and sanitary options available
- 150 Class and 300 Class raised face flanged thermowells available
- The Female thread will accept the 1/2" NPT Male thread without galling or seizing
- Brass, 304 Stainless Steel, or 316 Stainless Steel standard material options - other options available
- Standard style is stepped; available in straight and tapered
- Different lagging lengths are available

APPLICATIONS

- Recommended wherever the process being measured is under pressure, corrosive, abrasive, or moving at a high velocity
- HVAC
- Petrochemical
- Oil and gas
- Process (flanged thermowells)

SPECIFICATIONS	
Bore size	0.260" (6.35 mm)
Process connection	1/2" NPT, 3/4" NPT, 1" NPT
Instrument connection	1/2" NPSM
Materials	316 Stainless Steel, 304 Stainless Steel, Brass
Presssure rating	316 and 316 Stainless Steel: 7,000 psi @ 70 °F Brass: 5,000 psi @ 70 °F
Style	≤4": Straight shank >4": Stepped shank
Maximum shank diameter	0.750" (19.05 mm)

⚠ **WARNING:** This product can expose you to chemicals including Lead and/or Nickel, which are known to the State of California to cause cancer and birth defects or other reproductive harm. For more information go to www.P65Warnings.ca.gov.

ORDERING INFORMATION								
PROCESS CONNECTIONS	**50**	1/2" NPT only	**100**	1" NPT or Flange Connection *	**200**	2" Flange Connection *		
	75	3/4" NPT only	**150**	1-1/2" Flange Connection *				
STEM LENGTHS	**025**	2-1/2" **	**120**	12"	**25mm**	25 mm	**250mm**	250 mm
	040	4" **	**150**	15"	**50mm**	50 mm	**350mm**	350 mm
	060	6"	**180**	18"	**100mm**	100 mm		
	090	9"	**240**	24"	**150mm**	150 mm		
MATERIALS	**Brass**	Brass Other materials available on request	**304SS**	304 Stainless Steel	**316SS**	316 Stainless Steel		
OPTIONS	**1/4**	1/4" NPT Instrument Connection	**PC**	Plug and Chain	**RF2**	Raised Face 300 Class Flange		
	3/8B	3/8" Diameter Bore	**RF1**	Raised Face 150 Class Flange	**RTD**	For use with 900/910 Series RTDs		

Please consult your local NOSHOK Distributor or NOSHOK, Inc. for availability and delivery information.

* To order a Flange Connection, you must specify Option RF1 or RF2. Flange Connections available only in Stainless Steel.

** Flange Connection not available.

EXAMPLE **75 – 090 – 304SS – RF1 – RTD**

Process connection .....3/4" NPT
Stem length .....9"
Material .....304 Stainless Steel
Option 1 .....Raised Face Class 150 Flange
Option 2 .....For use with 900/910 Series RTD

Straight Shank

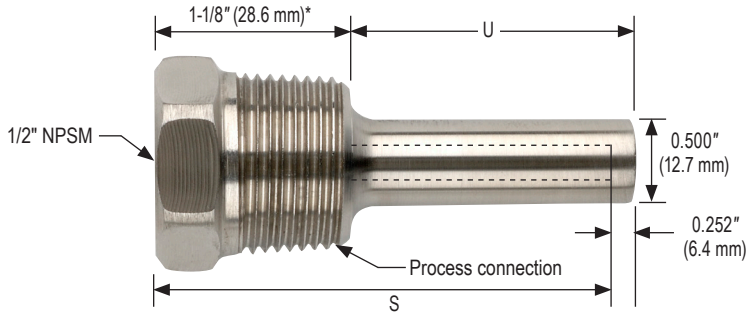

*1-3/4" (44.5 mm) for 040 Ordering Code

Stepped Shank

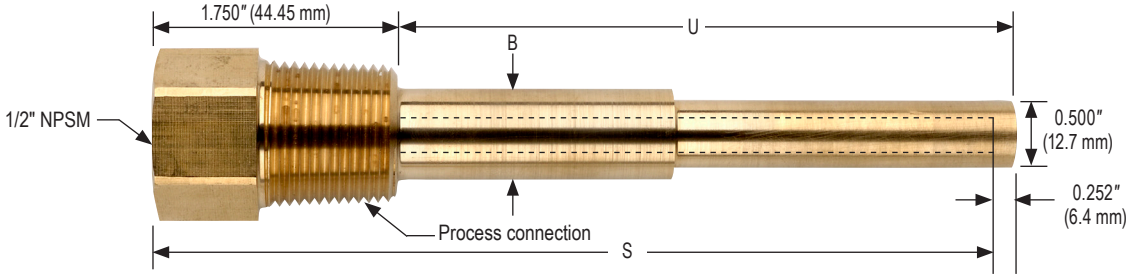

Bore Size	"B" Maximum Insertion Diameter
0.260" (6.35 mm)	3/4" (19.05 mm)

		Straight		Stepped					
Insertion "U"	mm inch	41.3 1-5/8	63.5 2-1/2	114.3 4-1/2	190.5 7-1/2	266.7 10-1/2	342.9 13-1/2	419.1 16-1/2	571.5 22-1/2
Bore Depth "S"	mm inch	63.5 2-1/2	101.6 4	152.4 6	228.6 9	304.8 12	381.0 15	457.2 18	609.6 24
Ordering Code		**025**	**040**	**060**	**090**	**120**	**150**	**180**	**240**

Flange Connection Thermowell dimensions on next page.

RF1 150 Class & RF2 300 Class Raised Face Flanges

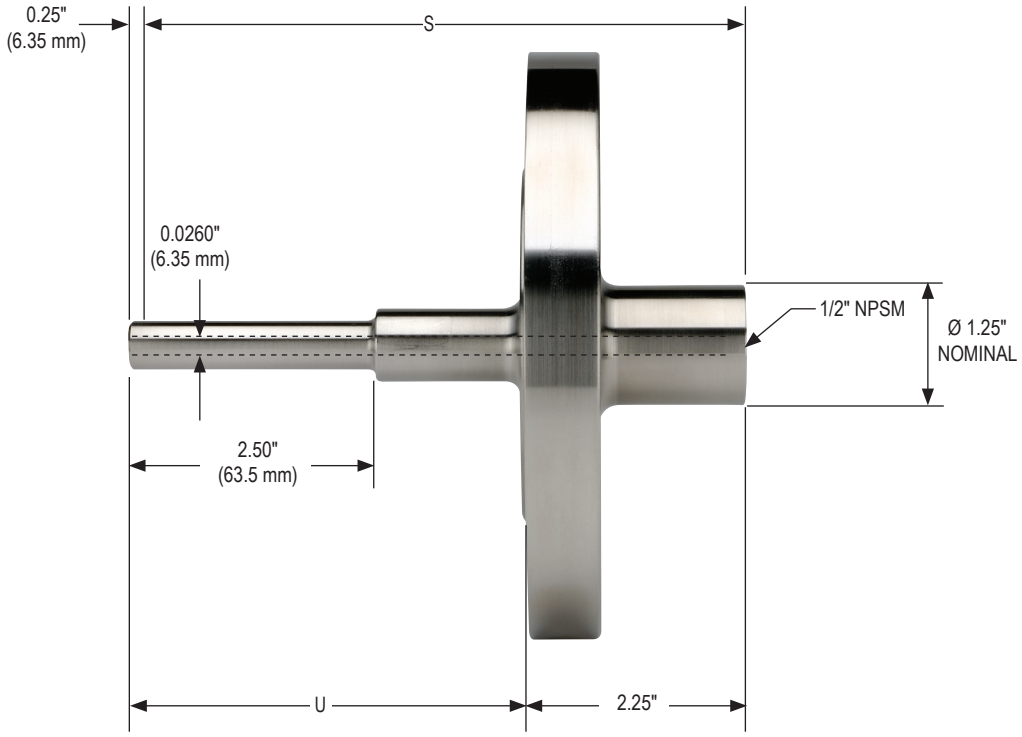

RF1 Class 150 Flange / RF2 Class 300 Flange							
Insertion "U"	mm inch	101.6 4	177.8 7	254.0 10	330.2 13	406.4 16	558.8 22
Bore Depth "S"	mm inch	152.4 6	228.6 9	304.8 12	381.0 15	457.2 18	609.6 24
Ordering Code		**060**	**090**	**120**	**150**	**180**	**240**

Note: NOSHOK Thermowells are provided with NPSM internal thread connections. This female connection may be used with NPT or NPSM mating threads. The NPSM thread provides a better mechanical connection without seizing or galling.

Standard Temperature Ranges / Figure Intervals

°F Ranges	Figure Interval	Div.
-100° to 150 °F	20°	2°
-80° to 120 °F	20°	2°
-40° to 120 °F	20°	2°
-20° to 120 °F	20°	2°
-40° to 160 °F	20°	2°
0° to 100 °F	10°	1°
25° to 125 °F	10°	1°
30° to 130 °F	10°	1°
0° to 140 °F	10°	1°
0° to 200 °F	20°	2°
0° to 250 °F	20°	2°
20° to 240 °F	20°	2°
50° to 300 °F	20°	2°
50° to 400 °F	50°	5°
50° to 500 °F	50°	5°
50° to 550 °F	50°	5°
0° to 600 °F	100°	10°
150° to 750 °F	100°	10°
100° to 800 °F	100°	10°
200° to 1,000 °F	100°	10°

°C Ranges	Figure Interval	Div.
-70° to 70 °C	10°	1°
-60° to 50 °C	10°	1°
-40° to 50 °C	10°	1°
-30° to 50 °C	10°	1°
-40° to 70 °C	10°	1°
-20° to 40 °C	5°	1/2°
-5° to 50 °C	5°	1/2°
0° to 55 °C	5°	1/2°
-20° to 60 °C	5°	1/2°
-15° to 90 °C	10°	1°
-20° to 120 °C	10°	1°
-5° to 115 °C	10°	1°
10° to 150 °C	10°	1°
10° to 200 °C	20°	2°
10° to 260 °C	20°	2°
10° to 290 °C	20°	2°
-20° to 315 °C	50°	5°
65° to 400 °C	50°	5°
40° to 425 °C	50°	5°
100° to 540 °C	50°	5°

Thermowells: Pressure Rating vs. Temperature

Thermowell Material	Temperature in Degrees Fahrenheit						
	70 °F	200 °F	400 °F	600 °F	800 °F	1,000 °F	1,200 °F
	Pressure Rating (Pounds Per Square Inch)						
Brass	5,000	4,200	1,000	-	-	-	-
Welded Stainless Steel	982	820	675	604	550	510	299
304 Stainless Steel	7,000	6,200	5,600	5,400	5,200	4,500	1,650
316 Stainless Steel	7,000	7,000	6,400	6,200	6,100	5,100	2,500

Thermowells: Maximum Fluid Velocity vs. Insertion Length

Thermowell Material	Fluid Type	Insertion Length (Inches)		
		2"	4"	8"
		Maximum Fluid Velocity (Feet per Second)		
Brass	Air/Steam	207	75.5	27.3
	Water	59.3	32.2	19.7
Welded Stainless Steel	Air/Steam	169	61	20
	Water	88	20	10
304 Stainless Steel	Air/Steam	300	109	39.5
316 Stainless Steel	Water	148	82.2	-

Note: The values shown in this table are based on operating temperatures of 350 °F for Brass and 1,000 °F for Stainless Steel. Slightly higher velocities are possible at lower temperatures.

RTD Temperature vs. Resistance Table (Alpha +0.00385)

°C	°F	Ohms	°C	°F	Ohms	°C	°F	Ohms	°C	°F	Ohms	°C	°F	Ohms
-75	-103	101.95	-27	-16.6	89.4	21	69.8	108.18	69	156.2	126.7	117	242.6	144.94
-74	-101.2	70.73	-26	-14.8	89.8	22	71.6	108.57	70	158	127.08	118	244.4	145.32
-73	-99.4	71.13	-25	-13	90.19	23	73.4	108.96	71	159.8	127.46	119	246.2	145.69
-72	-97.6	71.53	-24	-11.2	90.59	24	75.2	109.35	72	161.6	127.85	120	248	146.07
-71	-95.8	71.93	-23	-9.4	90.98	25	77	109.73	73	163.4	128.23	121	249.8	146.45
-70	-94	72.33	-22	-7.6	91.37	26	78.8	110.12	74	165.2	128.61	122	251.6	146.82
-69	-92.2	72.73	-21	-5.8	91.77	27	80.6	110.51	75	167	128.99	123	253.4	147.2
-68	-90.4	73.13	-20	-4	92.16	28	82.4	110.9	76	168.8	129.38	124	255.2	147.58
-67	-88.6	73.53	-19	-2.2	92.55	29	84.2	111.28	77	170.6	129.76	125	257	147.95
-66	-86.8	73.93	-18	-0.4	92.95	30	86	111.67	78	172.4	130.14	126	258.8	148.33
-65	-85	74.33	-17	1.4	93.34	31	87.8	112.06	79	174.2	130.52	127	260.6	148.71
-64	-83.2	74.73	-16	3.2	93.73	32	89.6	112.45	80	176	130.9	128	262.4	149.08
-63	-81.4	75.13	-15	5	94.12	33	91.4	112.83	81	177.8	131.28	129	264.2	149.46
-62	-79.6	75.53	-14	6.8	94.52	34	93.2	113.22	82	179.6	131.67	130	266	149.83
-61	-77.8	75.93	-13	8.6	94.91	35	95	113.61	83	181.4	132.05	131	267.8	150.21
-60	-76	76.33	-12	10.4	95.3	36	96.8	113.99	84	183.2	132.43	132	269.6	150.58
-59	-74.2	76.73	-11	12.2	95.69	37	98.6	114.38	85	185	132.81	133	271.4	150.96
-58	-72.4	77.13	-10	14	96.09	38	100.4	114.77	86	186.8	133.19	134	273.2	151.34
-57	-70.6	77.52	-9	15.8	96.48	39	102.2	115.15	87	188.6	133.57	135	275	151.71
-56	-68.8	77.92	-8	17.6	96.87	40	104	115.54	88	190.4	133.95	136	276.8	152.09
-55	-67	78.32	-7	19.4	97.26	41	105.8	115.93	89	192.2	134.33	137	278.6	152.46
-54	-65.2	78.72	-6	21.2	97.65	42	107.6	116.31	90	194	134.71	138	280.4	152.84
-53	-63.4	79.11	-5	23	98.04	43	109.4	116.7	91	195.8	135.09	139	282.2	153.21
-52	-61.6	79.51	-4	24.8	98.44	44	111.2	117.08	92	197.6	135.47	140	284	153.58
-51	-59.8	79.91	-3	26.6	98.83	45	113	117.47	93	199.4	135.85	141	285.8	153.95
-50	-58	80.31	-2	28.4	99.22	46	114.8	117.85	94	201.2	136.23	142	287.6	154.32
-49	-56.2	80.7	-1	30.2	99.61	47	116.6	118.24	95	203	136.61	143	289.4	154.71
-48	-54.4	81.1	0	32	100	48	118.4	118.62	96	204.8	136.99	144	291.2	155.08
-47	-52.6	81.5	1	33.8	100.39	49	120.2	119.01	97	206.6	137.37	145	293	155.46
-46	-50.8	81.89	2	35.6	100.78	50	122	119.4	98	208.4	137.75	146	294.8	155.83
-45	-49	82.29	3	37.4	101.17	51	123.8	119.78	99	210.2	138.13	147	296.6	156.21
-44	-47.2	82.69	4	39.2	101.56	52	125.6	120.16	100	212	138.51	148	298.4	156.58
-43	-45.4	83.08	5	41	101.95	53	127.4	120.55	101	213.8	138.89	149	300.2	156.96
-42	-43.6	83.48	6	42.8	102.34	54	129.2	120.93	102	215.6	139.27	150	302	157.33
-41	-41.8	83.88	7	44.6	102.73	55	131	121.32	103	217.4	139.65	151	303.8	157.71
-40	-40	84.27	8	46.4	103.12	56	132.8	121.7	104	219.2	140.03	152	305.6	158.08
-39	-38.2	84.67	9	48.2	103.51	57	134.6	122.09	105	221	140.39	153	307.4	158.45
-38	-36.4	85.06	10	50	103.9	58	136.4	122.47	106	222.8	140.77	154	309.2	158.83
-37	-34.6	85.46	11	51.8	104.29	59	138.2	122.86	107	224.6	141.15	155	311	159.2
-36	-32.8	85.85	12	53.6	104.68	60	140	123.24	108	226.4	141.53	156	312.8	159.56
-35	-31	86.25	13	55.4	105.07	61	141.8	123.62	109	228.2	141.91	157	314.6	159.94
-34	-29.2	86.64	14	57.2	105.46	62	143.6	124.01	110	230	142.29	158	316.4	160.31
-33	-27.4	87.04	15	59	105.85	63	145.4	124.39	111	231.8	142.66	159	318.2	160.68
-32	-25.6	87.43	16	60.8	106.24	64	147.2	124.77	112	233.6	143.04	160	320	161.05
-31	-23.8	87.83	17	62.6	106.63	65	149	125.17	113	235.4	143.42	161	321.8	161.43
-30	-22	88.22	18	64.4	107.02	66	150.8	125.55	114	237.2	143.8	162	323.6	161.8
-29	-20.2	88.62	19	66.2	107.4	67	152.6	125.93	115	239	144.18	163	325.4	162.17
-28	-18.4	89.01	20	68	107.79	68	154.4	126.32	116	240.8	144.56	164	327.2	162.54

RTD Temperature vs. Resistance Table (Alpha +0.00385)

°C	°F	Ohms	°C	°F	Ohms	°C	°F	Ohms	°C	°F	Ohms	°C	°F	Ohms
165	329	162.91	213	415.4	180.63	261	501.8	198.07	309	588.2	215.26	357	674.6	232.16
166	330.8	163.28	214	417.2	180.99	262	503.6	198.43	310	590	215.61	358	676.4	232.51
167	332.6	163.66	215	419	181.36	263	505.4	198.79	311	591.8	215.97	359	678.2	232.86
168	334.4	164.03	216	420.8	181.73	264	507.2	199.15	312	593.6	216.32	360	680	233.21
169	336.2	164.4	217	422.6	182.09	265	509	199.51	313	595.4	216.68	361	681.8	233.56
170	338	164.77	218	424.4	182.46	266	510.8	199.87	314	597.2	217.03	362	683.6	233.91
171	339.8	165.14	219	426.2	182.82	267	512.6	200.23	315	599	217.39	363	685.4	234.26
172	341.6	165.51	220	428	183.19	268	514.4	200.59	316	600.8	217.73	364	687.2	234.6
173	343.4	165.88	221	429.8	183.55	269	516.2	200.95	317	602.6	218.08	365	689	234.95
174	345.2	166.25	222	431.6	183.92	270	518	201.31	318	604.4	218.44	366	690.8	235.3
175	347	166.62	223	433.4	184.28	271	519.8	201.67	319	606.2	218.79	367	692.6	235.65
176	348.8	167	224	435.2	184.65	272	521.6	202.03	320	608	219.15	368	694.4	236
177	350.6	167.37	225	437	185.01	273	523.4	202.38	321	609.8	219.5	369	696.2	236.35
178	352.4	167.74	226	438.8	185.38	274	525.2	202.74	322	611.6	219.85	370	698	236.7
179	354.2	168.11	227	440.6	185.74	275	527	203.1	323	613.4	220.21	371	699.8	237.05
180	356	168.48	228	442.4	186.11	276	528.8	203.46	324	615.2	220.56	372	701.6	237.4
181	357.8	168.85	229	444.2	186.47	277	530.6	203.82	325	617	220.91	373	703.4	237.75
182	359.6	169.22	230	446	186.84	278	532.4	204.18	326	618.8	221.27	374	705.2	238.09
183	361.4	169.59	231	447.8	187.2	279	534.2	204.54	327	620.6	221.62	375	707	238.44
184	363.2	169.96	232	449.6	187.56	280	536	204.9	328	622.4	221.97	376	708.8	238.79
185	365	170.33	233	451.4	187.93	281	537.8	205.25	329	624.2	222.32	377	710.6	239.14
186	366.8	170.69	234	453.2	188.29	282	539.6	205.61	330	626	222.68	378	712.4	239.48
187	368.6	171.06	235	455	188.65	283	541.4	205.97	331	627.8	223.03	379	714.2	239.83
188	370.4	171.43	236	456.8	189.02	284	543.2	206.33	332	629.6	223.38	380	716	240.18
189	372.2	171.8	237	458.6	189.38	285	545	206.7	333	631.4	223.73	381	717.8	240.52
190	374	172.17	238	460.4	189.74	286	546.8	207.05	334	633.2	224.09	382	719.6	240.87
191	375.8	172.54	239	462.2	190.11	287	548.6	207.41	335	635	224.45	383	721.4	241.22
192	377.6	172.91	240	464	190.47	288	550.4	207.77	336	636.8	224.8	384	723.2	241.56
193	379.4	173.27	241	465.8	190.83	289	552.2	208.13	337	638.6	225.15	385	725	241.91
194	381.2	173.64	242	467.6	191.2	290	554	208.48	338	640.4	225.5	386	726.8	242.25
195	383	174.01	243	469.4	191.56	291	555.8	208.84	339	642.2	225.85	387	728.6	242.6
196	384.8	174.39	244	471.2	191.92	292	557.6	209.2	340	644	226.21	388	730.4	242.95
197	386.6	174.75	245	473	192.28	293	559.4	209.55	341	645.8	226.56	389	732.2	243.29
198	388.4	175.12	246	474.8	192.66	294	561.2	209.91	342	647.6	226.91	390	734	243.64
199	390.2	175.49	247	476.6	193.02	295	563	210.27	343	649.4	227.26	391	735.8	243.98
200	392	175.86	248	478.4	193.38	296	564.8	210.62	344	651.2	227.61	392	737.6	244.33
201	393.8	176.23	249	480.2	193.74	297	566.6	210.98	345	653	227.96	393	739.4	244.67
202	395.6	176.59	250	482	194.1	298	568.4	211.34	346	654.8	228.31	394	741.2	245.02
203	397.4	176.96	251	483.8	194.47	299	570.2	211.69	347	656.6	228.66	395	743	245.36
204	399.2	177.33	252	485.6	194.83	300	572	212.05	348	658.4	229.01	396	744.8	245.71
205	401	177.7	253	487.4	195.19	301	573.8	212.4	349	660.2	229.36	397	746.6	246.05
206	402.8	178.06	254	489.2	195.55	302	575.6	212.76	350	662	229.72	398	748.4	246.4
207	404.6	178.43	255	491	195.9	303	577.4	213.12	351	663.8	230.07	399	750.2	246.74
208	406.4	178.8	256	492.8	196.26	304	579.2	213.47	352	665.6	230.42	400	752	247.09
209	408.2	179.16	257	494.6	196.62	305	581	213.83	353	667.4	230.77			
210	410	179.53	258	496.4	196.98	306	582.8	214.19	354	669.2	231.12			
211	411.8	179.9	259	498.2	197.35	307	584.6	214.55	355	671	231.47			
212	413.6	180.26	260	500	197.71	308	586.4	214.9	356	672.8	231.81			

Temperature Conversions

	From Fahrenheit	To Fahrenheit
Celsius	[°C] = ([°F] − 32) × 5/9	[°F] = [°C] × 9/5 + 32
Kelvin	[K] = ([°F] + 459.67) × 5/9	[°F] = [K] × 9/5 − 459.67
Rankine	[°R] = [°F] + 459.67	[°F] = [°R] − 459.67
Delisle	[°De] = (212 − [°F]) × 5/6	[°F] = 212 - [°De] x 6/5
Newton	[°N] = ([°F] − 32) × 11/60	[°F] = [°N] × 60/11 + 32
Réaumur	[°Ré] = ([°F] − 32) × 4/9	[°F] = [°Ré] × 9/4 + 32
Rømer	[°Rø] = ([°F] − 32) × 7/24 + 7.5	[°F] = ([°Rø] − 7.5) × 24/7 + 32

	From Celsius (Centigrade)	To Celsius (Centigrade)
Fahrenheit	[°F] = [°C] × 9/5 + 32	[°C] = ([°F] − 32) × 5/9
Kelvin	[K] = [°C] + 273.15	[°C] = [K] − 273.15
Rankine	[°R] = ([°C] + 273.15) × 9/5	[°C] = ([°R] − 491.67) × 5/9
Delisle	[°De] = (100 − [°C]) × 3/2	[°C] = 100 − [°De] × 2/3
Newton	[°N] = [°C] × 33/100	[°C] = [°N] × 100/33
Réaumur	[°Ré] = [°C] × 4/5	[°C] = [°Ré] × 5/4
Rømer	[°Rø] = [°C] × 21/40 + 7.5	[°C] = ([°Rø] − 7.5) × 40/21

	From Kelvin	To Kelvin
Celsius	[°C] = [K] − 273.15	[K] = [°C] + 273.15
Fahrenheit	[°F] = [K] × 9/5 − 459.67	[K] = ([°F] + 459.67) × 5/9
Rankine	[°R] = [K] × 9/5	[K] = [°R] × 5/9
Delisle	[°De] = (373.15 − [K]) × 3/2	[K] = 373.15 − [°De] × 2/3
Newton	[°N] = ([K] − 273.15) × 33/100	[K] = [°N] × 100/33 + 273.15
Réaumur	[°Ré] = ([K] − 273.15) × 4/5	[K] = [°Ré] × 5/4 + 273.15
Rømer	[°Rø] = ([K] − 273.15) × 21/40 + 7.5	[K] = ([°Rø] − 7.5) × 40/21 + 273.15

Wiring Diagrams

2-Wire

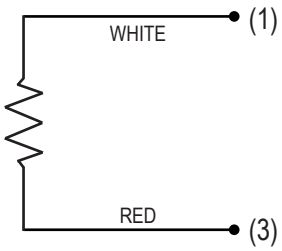

3-Wire

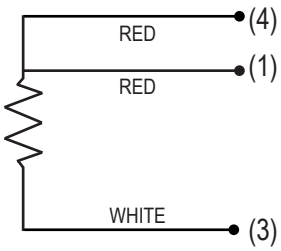

4-Wire

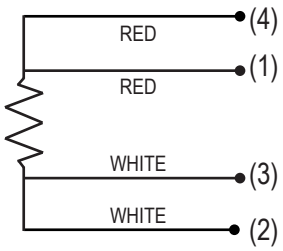

Dual 2-Wire

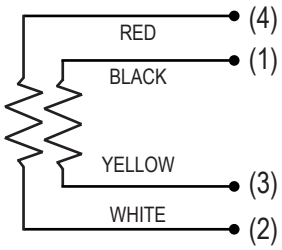

Dual 3-Wire

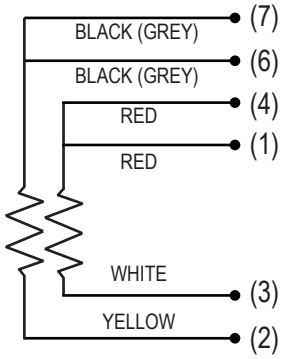

Dual 4-Wire

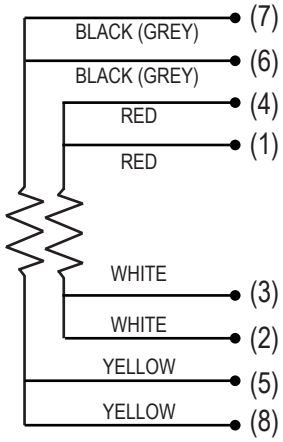

Thermometer Tolerance Classes per EN 60751

Tolerance Classes	Resistance Tolerance at 0 °C	Tolerance as a Function of Absolute Value of Temperature in °C
Class AA	±0.04% (±0.1 °C)	±[0.1 + (0.0017 * |t|)]
Class A	±0.06% (±0.15 °C)	±[0.15 + (0.002 * |t|)]
Class B	±0.12% (±0.3 °C)	±[0.3 + (0.005 * |t|)]
Class C	±0.23% (±0.6 °C)	±[0.6 + (0.01 * |t|)]

RTD Standards

Organization	Standard	ALPHA: Average Temperature Coefficient of Resistance (0 °C)$^{-1}$	Nominal Resistance at 0 °C
British Standard	BS 1904 : 1984	0.003850	100
Deutsch Industrial Norm	DIN 43760 :1980	0.003850	100
International Electrotechnical Commission	IEC 751 : 1995 (Amend. 2)	0.003850	100
Scientific Apparatus Manufacturers of America	SAMA RC-4-1966	0.003923	98.129
Japanese Standard	JIS C1604-1981	0.003916	100
American Society for Testing & Materials	ASTM E1137	0.003850	100

NOTES

NOTES

NOTES

QUALITY POLICY

NOSHOK is committed to providing a high degree of value and continually improving processes to enhance customer satisfaction by focusing on requirements for pressure, temperature, and level measurement instrumentation and related products.

TO DOWNLOAD OR ORDER CATALOGS,
VISIT WWW.NOSHOK.COM

All from world class technology.

Combined with real-world stamina.

The highest value with the industry's best warranty.

And all from a company with a 50+ year record of customer satisfaction.

All from your Single Source Instrumentation Company.

NOSHOK

Adaptive Industrial Solutions
sales@adaptiveind.com
(877) 818-5009

Web: www.noshok.com

ISO 9001:2015
REGISTERED

Mixed Sources
Product group from well-managed forests, controlled sources and recycled wood or fibre
www.fsc.org Cert no. SW-COC-002929
© 1996 Forest Stewardship Council