Adaptive Industrial Solutions
sales@adaptiveind.com
(877) 818-5009

TO BREATHE OR NOT TO BREATHE...
GAUGE OR SEALED PRESSURE REFERENCE FORMAT
Technical Note #3

When selecting a pressure transmitter, the pressure reference format is critical so as to provide an accurate device. Pressure reference may be gauge, sealed gauge, vacuum, absolute or differential. Gauge and sealed gauge format are the most commonly supplied and what we address below.

A pressure sensor has both a reference and process side. The process side is where the media being measured is applied, typically a pipe, flanged or other threaded connection. The reference side or back side is not visible from the outside and is enclosed inside the transmitters housing. There are many parameters to consider when selecting gauge or sealed gauge format. Below we define and provide guidelines in selecting these formats.

Gauge Pressure (PSIG)

Gauge pressure transducers provide a vent path to the reference or backside of the sensor. As shown in Fig 1, gauge format is typically provided for by adding a vent hole in the housing of the device. This provides an atmospheric reference to the reference of the sensor.

Fig. 1

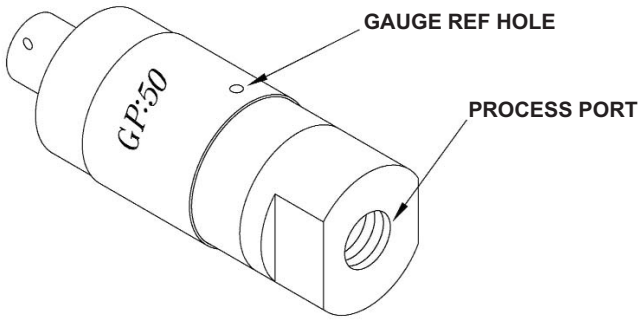

This vent hole insures both sides of the sensor are exposed to the local altitude and barometric pressure. This gauge reference hole equalizes these pressures and provides a stable zero reading regardless of barometric pressure or altitude. Therefore true gauge format provides a pressure measurement relative to local altitude and atmospheric conditions.

Gauge reference is very critical in ranges <300 PSI. It can affect ranges above or equal to 300 PSI but depending on accuracy required may or may not be a consideration. This is explained below under the Sealed gauge definition.

Sealed Gauge (PSIS or PSISG)

Sealed gauge transducers on the other hand, do not provide a vent hole to the sensors reference side. This reference or backside of the sensor is sealed from atmosphere at the factory.

GP:50 offers two sealed gauge formats designated as hermetic and non-hermetic, option codes 6 & 7 respectfully. A hermetically sealed gauge (6) device has the reference side of the sensor evacuated and sealed via a special header. This hermetic header helps reduces the effects of temperature due to internal air expansion trapped in the housing assembly. The unit is then zeroed to 1 atmosphere or approximately 14.7 PSIA.

The non-hermetic version (7) does not provide a hermetic header. The sensors reference side is sealed inside the housing at local atmospheric pressure. This non-hermetic version typically isn't a factor in higher ranges, typically 1,000 PSI or higher, or where ambient temperature changes can be minimized.

Adaptive Industrial Solutions
sales@adaptiveind.com
(877) 818-5009

TO BREATHE OR NOT TO BREATHE...
GAUGE OR SEALED PRESSURE REFERENCE FORMAT
Technical Note #3

Affect of Local Pressure:

CHART A

FT	IN HG	PSI
0	29.921	14.7
500	29.38	14.43
1,000	28.86	14.18
1,500	28.33	13.9
2,000	27.82	13.67
2,500	27.31	13.41
3,000	26.81	13.19
3,500	26.32	12.92
4,000	25.84	12.7
4,500	25.36	12.45
5,000	24.89	12.23
10,000	20.58	10.1
15,000	16.88	8.28
20,000	13.75	6.75
30,000	8.88	4.36

Sealed gauge readings can be drastically affected by barometric pressure and altitude changes depending on the sensor range. Chart A shows the relationship between altitude and absolute pressure. The altitude at which the transmitter is installed can greatly affect the zero reading.

For example, sealed gauge units are calibrated at the factory at 591 ft above Sea level or ~29.40 in. Hg. Calgary, Canada is at 3,533FT or ~26.30 in. Hg, a 3.1 in. Hg difference or 1.52 PSI. This translates to a -0.51% difference on a 300 PSI sensor or a zero reading drop as much as -0.081 mA. On a 100 PSI sensor this is a -1.52% change which could potentially produce a zero reading of 3.856 mA or lower depending on the initial zero setting called Zero balance.

On this same 100 PSI transmitter, if the standard zero balance spec is +/-1% FSO, the zero could potentially be as low as 3.84mA (16mA span +/-1% = +/-0.16mA) compounded with the additional -1.52 PSI altitude change, a 2.52 PSI or -2.5% lower zero could result. Barometric effects can lower the zero even further.

Barometric pressure also affects the zero reading. Barometric pressure could potentially swing as much as 1 PSI, (typical high -30.6 in. Hg to typical low -28.5 in. Hg) depending on weather conditions. For example a 1.02 in. Hg drop in barometric pressure would result in a 0.48% zero offset error on a 100-PSI sensor.

As mentioned above, gauge pressure format negates effects from changes in local atmospheric pressure and altitude.

All these effects need to be considered when selecting what format you require. Finally, consider the ambient conditions where the transmitter is being installed. Wet, oily, dirty, harsh environments may require a sealed gauge format to reduce the chances of contamination. To provide gauge format in these harsh environments an optional vented cable is offered to remotely vent the reference side away from the potential contaminated area.

Selecting the correct pressure format, either gauge or sealed gauge will provide you the best, most accurate pressure solution for your application.