DIAPHRAGM SEAL



Series BR1000

SERIES BR1000

FEATURES:

The Blue Ribbon Series BR1000 diaphragm seal is an economical isolation device used to protect pressure instrumentation from the media to be measured. Designed with a rugged, two-piece bolted construction for pressure ranges from 30"Hg vacuum to 2500 PSI, the Series BR1000 provides exceptional protection in corrosive applications or where the pressure instrumentation process port alone may be prone to clogging.

SPECIFICATIONS:

Housing
- 316 Stainless Steel

Diaphragm
- 316 Stainless Steel

Construction
- Two-Piece Bolted

Gasket
- Buna-N (30 PSI to 2500 PSI)
- Viton (30"HgV to 30 PSI)

Connection
- Bottom: ¼", ½", ¾" and 1" NPT
- Top: ¼" and ½" NPT

Process Temperature
- -22 °F to +212 °F (-30 °C to +100 °C)

OPTIONS:

- Flushing Port/Connection
- Viton and Teflon Gaskets
- Monel, Hastelloy-C Diaphragm

LOWER HOUSING	
BR-D-1000	¼" SS Lower
BR-D-1001	½" SS Lower
BR-D-1002	½" SS Lower with Flushing Port
BR-D-1003	¾" SS Lower
BR-D-1004	¾" SS Lower with Flushing Port
BR-D-1005	1" SS Lower
BR-D-1006	1" SS Lower with Flushing Port
BR-D-1007-V	¼" Viton
BR-D-1008-V	½" Viton
BR-D-1009-V	¾" Viton

UPPER HOUSING	
BR-D-2000	¼" NPT SS 316 SS Diaphragm
BR-D-2001	¼" NPT SS Monel Diaphragm
BR-D-2002	¼" NPT SS Hastelloy-C Diaphragm
BR-D-2003	¼" NPT SS Viton Diaphragm
BR-D-2004	½" NPT SS 316 SS Diaphragm
BR-D-2005	½" NPT SS Monel Diaphragm
BR-D-2006	½" NPT SS Hastelloy-C Diaphragm
BR-D-2007	½" NPT SS Viton Diaphragm

© 2015 Blue Ribbon Corp. **Adaptive Industrial Solutions**
sales@adaptiveind.com | (877) 818-5009

DIAPHRAGM SEAL

DIMENSIONAL DRAWING

All dimensions are in inches (mm)

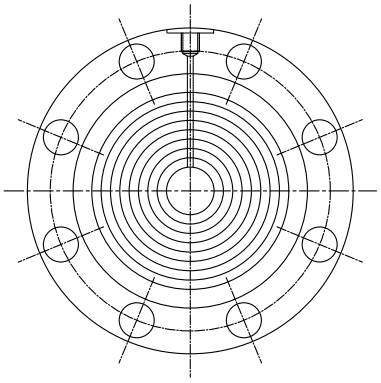

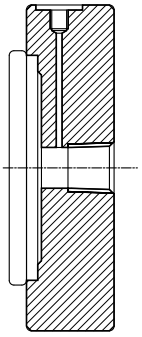

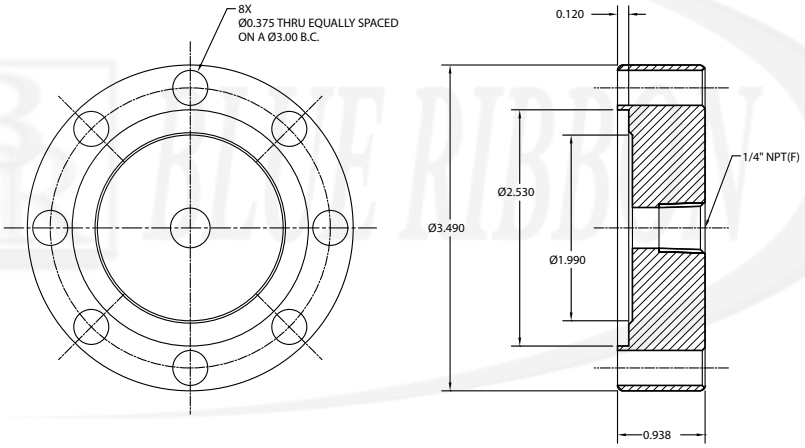

BR-D-1000/BR-D-2000
3.5" DIA.
316SST

All specifications are for reference purposes only. In the interests of continuous product improvement, all specifications are subject to change without notice. Please contact Blue Ribbon Corporation for assistance with your application.

© 2015 Blue Ribbon Corp.
Adaptive Industrial Solutions
sales@adaptiveind.com | (877) 818-5009