INTRINSICALLY SAFE PRESSURE TRANSDUCER



Model BR311 I, GI, AI
Intrinsically Safe Pressure Transducer

MODEL BR311 I, GI, AI

FEATURES:

- 0 to 5 PSI thru 0 to 75K PSI (75 mBAR to 1,034 BAR)
- FM, CSA, ATEX & IEC approvals
- Welded, rugged construction
- Optional high overpressure protection

APPLICATIONS:

- Rig safety systems
- Well head control
- Gas pipeline
- Control Panels
- On-board transmission & engine monitoring

PRODUCT OVERVIEW:

The GP:50 Model 11 series for Blue Ribbon Corporation provides a rugged solution in hazardous areas. The all-welded, stainless steel design provides years of reliable service in some of the harshest applications.

FIELD OPTIONS:

- FM, CSA, ATEX, IEC Intrinsically Safe*
- Zero & Span adjust
- Alternate connectors & pressure ports
- For explosion-proof, see Model 311X/P*

*For details of available approvals go to:
Blue Ribbon Corp Certifications

BR5SL-014
REV-F

© 2016 Blue Ribbon Corp. **Adaptive Industrial Solutions**
sales@adaptiveind.com | (877) 818-5009

INTRINSICALLY SAFE PRESSURE TRANSDUCER

DIMENSIONAL DRAWING

All dimensions are in inches (mm)

STANDARD WIRING CONFIGURATION

PIN OR WIRE COLOR	DESCRIPTION
A/1/RED	+EXC/SIG
B/2/GRN	CASE GND
C/3/WHT	N/C
D/4/BLK	-EXC/SIG
E/5/BLU	N/C
F/6/BRN	N/C

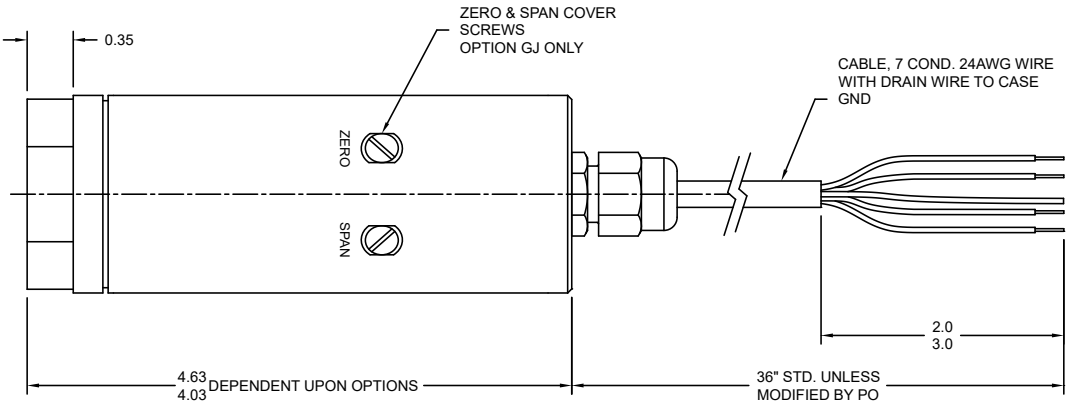

REFERENCE SPECIFICATIONS

ELECTRICAL

- **Excitation Voltage:** 10 to 28 Vdc excitation
- **Output Signal:** 4-20 mA output
- **Insulation Resistance:** >10 MΩ @ 50 Vdc, +70 °F
- **Circuit Protection:** RFI, EMI & Reverse polarity protected
- **Response Time:** <5 ms 10% to 90%
- **Connection:** 36" long PVC Jacketed, 24 AWG , 7 conductor cable with drain wire

MATERIALS OF CONSTRUCTION

- **Wetted Parts:** 316 or 17-4 PH stainless steel (Options available, consult factory)
- **Housing:** 316 stainless steel
- **Internal Fill:** Fomblin oil fill (May contain Silicone Oil)

STATIC ACCURACY (HYSTERESIS, NON-LINEARITY & REPEATABILITY @ +70 °F)

- **Standard:** ±0.5%
- **Improved:** ±0.20% and ±0.1%
- **Zero & Span Balance:** ±1.0% FSO @ +70 °F, 0.5% optional

MECHANICAL

- **Process Connection:** ¼" NPT (F) for ranges <20 KPSI (1.4 BAR) High pressure coned fittings for ranges 20K to 75K PSI (1,379 to 5,171 BAR)
- **Proof Pressure:** 1.5X FSO ≤30K PSI, 1.2X FSO >30K PSI
- **Burst Pressure:** 2.5X FSO ≤10K PSI; 5X FSO >10K PSI and ≤30K PSI; 1.5X ≤75K PSI
- **Approximate Weight:** 10 oz, (0.3 kg) nominal (options may increase weight)

PRESSURE RANGES

- 0 to 5 thru 0 to 75K PSI (0 to 0.3 thru 0 to 5,171 BAR) (PSIG, PSIS, PSIA, PSIV & Compound ranges available)

THERMAL SPECIFICATIONS

- **Compensated Range:** 0 °F to +180 °F (-18 °C to +82 °C)
- **Operating Range:** -40 °F to +176 °F (-40 °C to +80 °C)
- **Storage Ambient:** -65 °F to +250 °F (-53 °C to +121 °C)
- **Effect on Zero/Span:** ±2.0% FSO/100 °F

Improved or expanded temperature compensation available

All specifications are for reference purposes only. In the interests of continuous product improvement, all specifications are subject to change without notice. Please contact Blue Ribbon Corporation for assistance with your application.

© 2016 Blue Ribbon Corp.
Adaptive Industrial Solutions
sales@adaptiveind.com | (877) 818-5009