SUBMERSIBLE LEVEL TRANSMITTER FOR HAZARDOUS LOCATIONS



Model 313AI
Submersible Level Transmitter
for Hazardous Locations

Current Approvals:

Pending Approvals:

MODEL 313AI

FEATURES:

- ATEX & IEC approvals
- Submersible to 700 FTWC (213.4 meters WC)
- 1" diameter
- FM & CSA approvals pending
- All 316L stainless steel construction
- Lightning suppression standard

APPLICATIONS:

- Wet wells, ponds, rivers and tank level
- Water treatment
- Ground water monitoring
- Irrigation

PRODUCT OVERVIEW:

The GP:50 Model 313AI for Blue Ribbon Corp is an ATEX intrinsically safe submersible level transmitter, providing high-accuracy level measurements for hazardous locations. The corrosion-resistant 316L stainless steel construction, integrated lightning suppression and hydrophobic breather vent help provide years of maintenance-free service.

APPROVALS:

Currently Available:

- ATEX/IEC Intrinsically Safe: II 1 G Ex ia IIC T5 Ga

Pending:

- ATEX/IEC Zone 2: II 3 G Ex nA/ic IIC T5 Gc
- FM, CSA Intrinsically Safe: Class I, Division 1, Groups A-G, T5, Ex ai IIC T5
- FM/CSA: Division/ Zone 2: Class I Division 2, Groups A-G, T5, Ex nC/nA/nL T5

© 2016 Blue Ribbon Corp. **Adaptive Industrial Solutions**
sales@adaptiveind.com | (877) 818-5009

SUBMERSIBLE LEVEL TRANSMITTER FOR HAZARDOUS LOCATIONS

DIMENSIONAL DRAWING

All dimensions are in inches (mm)

STANDARD WIRING

WIRE	MODEL 313AI
RED	+EXC/SIG
BLK	-EXC/SIG
DRN	CASE GND

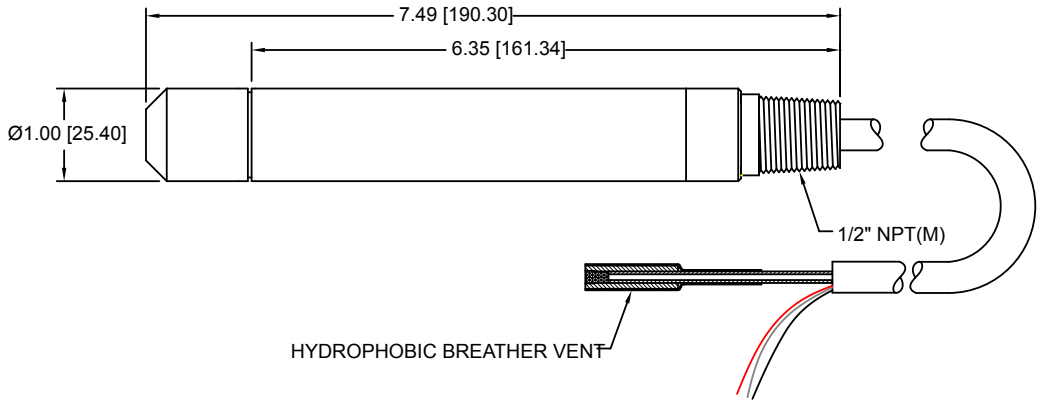

REFERENCE SPECIFICATIONS

ELECTRICAL

- **Supply Voltage:** 9 to 28 Vdc
- **Output Signal:** 4-20 mA
- **Circuit Protection:** Lightning and surge protection optional
- **Response Time:** <5 ms
- **Connection:** 1/2" NPT (M) conduit 8' of 18 AWG, 4 conductor, shielded, Hytrel jacketed cable with integral vent tube and hydrophobic filter (additional lengths available)

STATIC ACCURACY (BFSL): Non-Linearity @ +70 °F

Standard: ±0.5% FSO

Improved: ±0.2% FSO

Zero & Span Balance: ±2.0% FSO

MATERIALS OF CONSTRUCTION

- **Wetted Parts:** 316L SS, PVC, Neoprene, and Hytrel jacketed cable
- **Housing:** 316 Stainless Steel
- **Cable Jacket Material:** Hytrel (Optional Tefzel)
- **Cable Seal:** Viton (Optional materials available)
- **Nose Cap:** PVC

MECHANICAL

- **Process Connection:** AS43905E4 (M) w/PVC bullet nose
- **Proof Pressure:** 2.0X FSO
- **Burst Pressure:** 4.0X FSO
- **Weight:** <12 oz (340 g)
- **Diameter:** 1" (25.4 mm)

PRESSURE RANGES

- 0 to 2 PSI thru 0 to 300 PSI (138 mBAR thru 21 BAR)
- 0 to 4 FTWC thru 0 to 700 FTWC (1219 mm thru 213 m WC)

THERMAL SPECIFICATIONS

- **Compensated:** 0° F to +140 °F (-17.7 °C to +60 °C)
- **Operating Temperature:** -40 °F to +185 °F (-40 °C to +85 °C)
- **Storage:** -40 °F to +195 °F (-40 °C to +90.6 °C)
- **Effect on Zero/Span:** < ±2.0% FSO/100 °F

All specifications are for reference purposes only. In the interests of continuous product improvement, all specifications are subject to change without notice. Please contact Blue Ribbon Corporation for assistance with your application.

© 2016 Blue Ribbon Corp.

Adaptive Industrial Solutions
sales@adaptiveind.com | (877) 818-5009