Radar Level Transmitter



LTI20 SERIES

- Continuous level measurement in containers and tanks
- Suitable for liquid, highly viscous and solid media
- Compact design for easy integration
- Can be installed outside a container (plastic)
- Suitable for industrial applications and mobile working machines

APPLICATIONS

- General Industrial
- Mobile Equipment
- Agriculture Equipment
- Water Treatment
- Pumping Stations
- Injection Molding Media

SPECIFICATIONS	
Output signals	4 mA to 20 mA, 3-wire 0 Vdc to 5 Vdc, 3-wire
Media dielectric constant	≥ 2
Measurement frequency	FMCW (60 GHz technology); frequency band 57.4 ... 61.4 GHz
Min measuring distance	4 in
Max measuring distance	300 in [25 ft] (additional distances available, consult factory)
Beam angle	±6°
Measuring frequency	> 1 Hz
Settling time	1 s Per IEC 62828-1
Switch-on time	<3 s
Accuracy parameters	±0.2 inches Per IEC 62828-4
Non-repeatability	≤ 0.079 in
Response time	4s
Temperature ranges	Media: Standard -40 °F to 212 °F (-40 °C to 100 °C) High Temp -40 °F to 302 °F (-40 °C to 150 °C) Ambient: -40 °F to 212 °F (-40 °C to 100 °C) Storage: -40 °F to 158 °F (-40 °C to 70 °C)
Power requirement	8 Vdc to 36 Vdc
Measuring element	PEEK (Lens) FKM (O-Ring)
Connection	316L Stainless Steel
Housing material	316L Stainless Steel
M12 electrical connection	Nickle-plated Brass, Nylon
Cable jacket material	PVC (Others available upon request)
Environmental rating	IP67
Electromagnetic rating	RFI, EMI and ESD protection
Electrical protection	Protected against reverse polarity, over-voltage and short circuit
Shock	100g, 11 ms per IEC 60068-2-27
Vibration (Short duration)	40 g's, 10 to 2,000 Hz per IEC 60068-2-6
Vibration (Long term)	10 g's, 10 to 2,000 Hz per IEC 60068-2-6
Max. operating pressure	362 psi (25 bar)
Weight	Approximately 2.8 oz.

⚠ **WARNING:** This product can expose you to chemicals including Lead and Nickel, which are known to the State of California to cause cancer and birth defects or other reproductive harm. For more information go to www.P65Warnings.ca.gov

ORDERING INFORMATION				
SERIES	LTI20	Radar level transmitter		
OUTPUT SIGNALS	36	4 mA to 20 mA, 3-wire	2	0 Vdc to 5 Vdc, 3-wire
PROCESS CONNECTIONS	8	1/2" NPT	86	G1/2 (DIN 3852-2-A)
ELECTRICAL CONNECTIONS	25	M12 x 1 (4-pin)	36	6' integral cable
OPTIONS	HT	High Temp (302 °F [150 °C] Media Temp)		

Please consult your local NOSHOK Distributor or NOSHOK, Inc. for availability and delivery information

EXAMPLE

LTI20 – 36 – 8 – 25

Series ..... LTI20 Series
Output signal ..... 4 mA to 20 mA, 3-wire
Process connection ..... 1/2" NPT
Electrical connection ..... M12 x 1 (4-pin)



Calibration in Empty Tank:

1. Install the sensor and connect the output signal
2. Hold the provided magnet to the marked position "CAL" on the label
3. Output signal will change to 1 mA (0 Vdc) (Magnet has been detected by the device)
4. Continue to hold the magnet in the marked position (approx. 10 seconds)
5. Output signal will change to 2.5 mA (2.5 Vdc) (Remove magnet)
6. Calibration process will be complete after approximately 5 seconds

LTI20-25-HT (M12 x 1 4-pin)

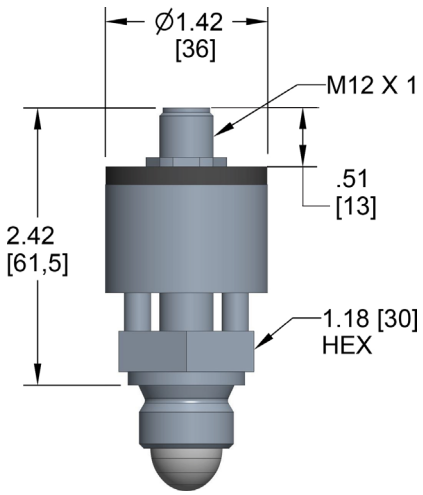

LTI20-25 (M12 x 1 4-pin)

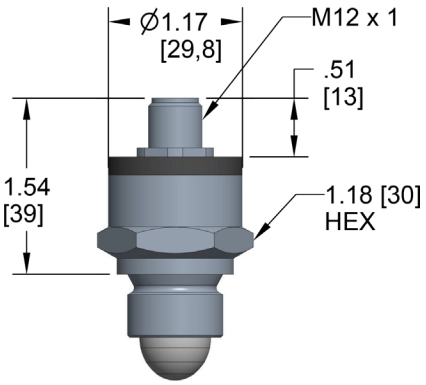

Dimensions

LTI20-36-HT (6' integral cable)

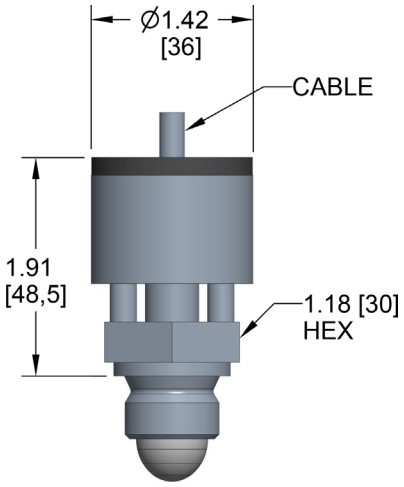

LTI20-36 (6' integral cable)

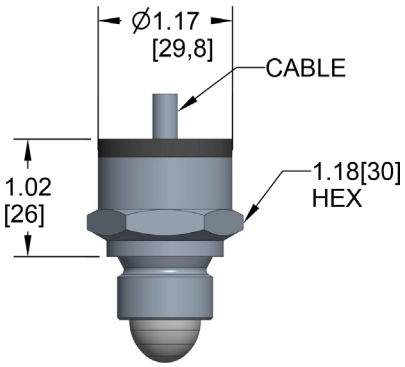

LTI20 Process Connections

