Battery-Operated Bluetooth SmartBox and MP-Total Sensor







Product Guide

GETTING TECHNICAL ASSISTANCE

To get assistance for product installation or commissioning, contact Halogen technical support at tech@halogensys.com.

Halogen Bluetooth SmartBox And MP-TOTAL Product Guide

Copyright © 2024 Halogen Systems, Inc. All rights reserved worldwide.
Revision R1.001

PRODUCT SPECIFICATIONS

All specifications and descriptions contained in this document are verified to be accurate at the time of printing. However, because continuous improvement is a goal at Halogen Systems, we reserve the right to make product modifications at any time. Revised editions are found on the manufacturer's website: www.halogensys.com. To communicate any inaccuracies or omissions in this manual, send an e-mail to tech@halogensys.com.

SAFETY INFORMATION

This guide contains important instructions for the Halogen Bluetooth SmartBox™ and the Halogen MP-TOTAL™ that should be used for installation and basic setup.

The manufacturer is not responsible for any damages due to misapplication or misuse of this product, including, without limitation, direct, incidental, and consequential damages, and disclaims such damages to the full extent permitted under applicable law. The user is solely responsible for identifying critical application risks and installing appropriate mechanisms to protect processes during a possible equipment malfunction.

Please read this entire manual before unpacking, setting up, or operating this equipment. Pay attention to all danger and caution statements. Failure to do so could result in serious injury to the operator or damage to the equipment. Make sure that the protection provided by this equipment is not impaired. Do not use or install this equipment in any manner other than that specified in this manual.

PRECAUTIONARY LABELS

Read all labels and tags attached to the instrument. Personal injury or damage to the instrument could occur if not observed. A symbol on the instrument is referenced in the manual with a precautionary statement.

	**Safety alert:** Indicates a hazardous situation that could result in injury or death. If on the instrument, refer to the instruction manual for operation or safety information.
	**Risk of electric shock:** Indicates components or a procedure that risks electric shock, electrocution, or injury.
	**Electrostatic discharge:** Indicates the presence of devices sensitive to electrostatic discharge (ESD) requiring that care must be taken to prevent damage to the equipment.
	**Disposal:** Electrical equipment may not be disposed of in European domestic or public disposal systems. Return old (or end-of-life) equipment to the manufacturer for disposal at no charge.

TRADEMARKS

The unauthorized use of any trademark displayed in this document or on the product is strictly prohibited. Bluetooth SmartBox and MP-TOTAL are trademarks of Halogen Systems, Inc. Multiple US and worldwide patents have been granted to Halogen Systems, Inc. for its unique features of Chlorine measurement system sensor systems.

Gems is a trademark of Gems Sensors, Inc. and Modbus is a registered trademark of Schneider Electric USA, Inc. All other trademarks contained in this document are the property of their respective owners, and any use does not imply sponsorship or endorsement of their products or services by Halogen Systems, Inc.

COMPLIANCE AND CERTIFICATION

CAUTION: This equipment is not intended for use in residential environments and may not provide adequate protection to radio reception in such environments.

Canadian Radio Interference-Causing Equipment Regulation, ICES-003, Class A

This Class A digital apparatus meets all Canadian interference-causing equipment regulations requirements.

Cet appareil numérique de classe A répond à toutes les exigences de la réglementation Canadienne sur les équipements provoquant des interferences.

FCC Part 15, Class A Limits

Supporting test records reside with the manufacturer. The device complies with Part 15 of the FCC Rules. Operation is subject to the following conditions:

1. The equipment may not cause harmful interference.
2. The equipment must accept any interference received, including interference that may cause undesired operation.

Changes or modifications to this equipment not expressly approved by the party responsible for compliance could void the user's authority to operate the equipment. This equipment has been tested and found to comply with the limits for a Class A digital device, pursuant to Part 15 of the FCC rules. These limits are designed to provide reasonable protection against harmful interference when the equipment is operated in a commercial environment. This equipment generates, uses, and can radiate radio frequency energy and, if not installed and used in accordance with the instruction manual, may cause harmful interference to radio communications. Operation of this equipment in a residential area is likely to cause harmful interference, in which case the user will be required to correct the interference at their expense. The following techniques can be used to reduce interference problems:

3. Disconnect the equipment from its power source to verify that it is or is not the source of the interference.
4. If the equipment is connected to the same outlet as the device experiencing interference, connect the equipment to a different outlet.
5. Move the equipment away from the device receiving the interference.
6. Reposition the receiving antenna for the device receiving the interference.
7. Try combinations of the above.

DECLARATION OF CONFORMITY

Drinking Water Sensors are Tested and certified to:

NSF/ANSI/CAN 61 and 372 – 2020

Certificate date issued: 7/23/2021

This device complies with Part 15 of the FCC Rules. Operation is subject to the following two conditions: (1) this device may not cause harmful interference, and (2) this device must accept any interference received, including interference that may cause undesired operation.

Manufacturer's Name:	Halogen Systems, Inc.
Manufacturer's Address:	8985 Double Diamond Pkwy Suite B10, Reno, NV 89521
Type of Equipment:	Multiparameter Sensor and Display
Model No:	D-H1LF-P and D-H1NF-P and Bluetooth SmartBox

I, the undersigned, hereby declare that the equipment specified above conforms to the above Directive and Standard.

Place: Reno, Nevada USA
Date: May 9, 2024

(Signature)
Michael Silveri, President

Copyright © 2023-2024 Halogen Systems, Inc. All rights reserved worldwide.

Contents

Getting technical assistance i
Product specifications i
Safety information i
Precautionary labels i
Trademarks i
Compliance and certification ii
Declaration of Conformity ii

Introduction 1
Product Summary 1
Key Features 1
Applications & Use Cases 1
Download the “Halogen Sensor Mobile” Application 2
How to use this guide 3

Installation 3
Step 1: Planning 4
Step 2: Install the Bluetooth SmartBox 6
Step 3: Set up the Halogen Sensor 9
Step 4: Start up and commissioning 10

Installation Checklist 12

Operation Instructions 13
Meaning of Indicators 13
Calibrating Chlorine Measurement 14
Battery-Operated Chlorine Calibration 15
Reference Calibrations 16
Restoring Factory Calibrations 17
Configuration 17
Warnings and Error Codes 21
Maintenance 28

Troubleshooting/FAQ 33
Troubleshooting 33
Common Field Repairable Issues 34
Frequently asked questions 35

Appendix A: Bluetooth SmartBox Technical Specifications 36

Appendix B: MP-TOTAL Technical Specifications 37

Appendix C: Battery Technical Specifications 38

Apendix D: Sensors and Accessories 38

Revision History 39

Limited Warranty 40

Index 41

Copyright © 2023-2024 Halogen Systems, Inc. All rights reserved worldwide.

Introduction

Product Summary

The Bluetooth SmartBox (BTSB) is a multichannel controller for Halogen MP-Total and other Halogen sensors. The combination of the Halogen BTSB and MP-Total represents a proprietary hardware and software system enabling real-time insights and intelligent analysis of onsite water quality. BTSB reduces site visits, provides flexible deployment options for utilities with diverse infrastructure, and is capable of withstanding harsh conditions and water exposure.

Key Features

- **Bluetooth Low Energy (BLE)**
- **Remote Cellular Data Telemetry**
- **[Optional] Modbus RTU Data Transmission (For PLC Integration)**
- **[Optional] 4-20mA Data Transmission (For Remote Telemetry)**
- **[Optional] Low Power Settings (For Battery Operation)**
- **[Optional] Solar Trickle Charging (For Battery Operation)**
- **IP67 – Limited Submersible Applications**

Applications & Use Cases

The modular Bluetooth/Cellular communication module is designed for remote monitoring of drinking water quality, specifically through integration with our advanced multiparameter chlorine analyzers. It enables users to access sensor data wirelessly or via cellular connection without the need for a physical display. Its robust IP67-rated enclosure and flexible power options make it ideal for challenging field conditions. The module can also be paired with a D20 controller/display to add BLE capabilities to your system.

APPLICATIONS

- **Drinking Water Distribution Monitoring**
  Enables chlorine residual monitoring in municipal water systems—particularly in remote or hard-to-access segments of the distribution network where continuous visibility is required.
- **Rural and Remote Water Systems**
  Ideal for monitoring disinfectant levels in small towns, rural communities, or temporary systems without regular infrastructure or access to grid power.
- **Unmanned Monitoring Stations**
  Supports maintenance-free operation in vaults, meter boxes, or roadside installations by using low-power mode and battery/solar operation.
- **Utility Maintenance Planning**
  Helps utilities track water quality during flushing operations, seasonal changes, or construction activities without needing onsite personnel.

INSTALLATION LOCATIONS

- **Underground Utility Vaults**
  Often accessed via manhole, these large enclosures house piping and equipment and are suitable for hardwired or battery-powered versions.
- **Meter Boxes (Jumbo Size)**
  Common in distribution networks, these are compact underground boxes where battery operation is advantageous for tight spaces and minimal servicing.
- **Above-Ground Cabinets**
  In cases where environmental protection is still required but access is easier, the module can be integrated into existing above-ground control boxes.

Download the “Halogen Sensor Mobile” Application

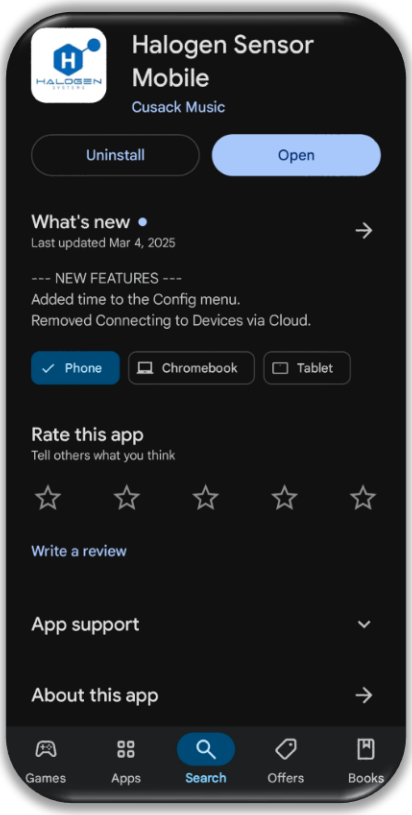

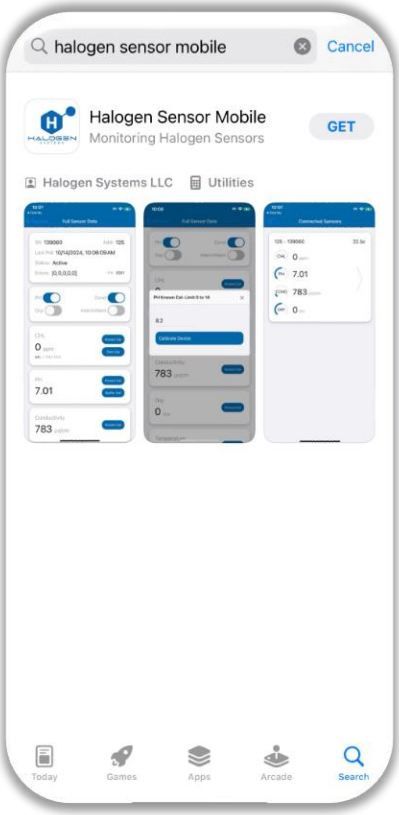

GET IT ON Google Play

Download on the App Store

Note: For product information, visit www.halogensys.com or the Halogen information center at www.halogensys.com/resources.

Copyright © 2023-2024 Halogen Systems, Inc. All rights reserved worldwide.

How to use this guide

Special symbols are used throughout the guide and should be taken seriously during the installation and initial commissioning of the Halogen BTSB and Halogen MP-TOTAL:

	**Warning:** Indicates components or a procedure that risks electric shock or injury.
	**Caution:** Indicates a hazardous situation that could result in minor injury or equipment damage.
Note:	A best practice alert, tip, or technique that results in successful results.

Installation

There are four steps to be performed in completing a typical BTSB and MP-TOTAL installation:

1. **Planning:** Unbox and inspect the box content and gather tools necessary for installation. Make sure the site is ready for product mounting.
2. **Install the Bluetooth SmartBox:** Mount the BTSB.
3. **Set up Halogen sensor:** Make sure the connections are set up, turn on water flow, and purge air from the flow cell. A typical installation consists of the flow cell version of the sensor and the BTSB. (To learn about other installations, visit the Halogen website.)
4. **Start up and Commission:** Connect the MP-TOTAL sensor to the BTSB. Power on the BTSB and check the parameters on the mobile app against a colorimeter and a pH meter. If calibration is required, calibrate pH first and then Chlorine.

Copyright © 2023-2024 Halogen Systems, Inc. All rights reserved worldwide.

Step 1: Planning

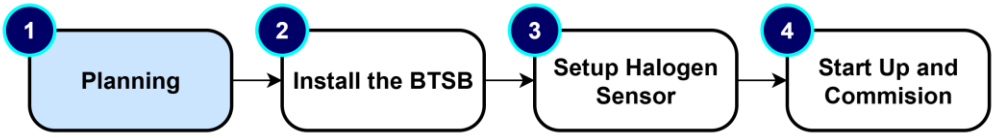

To plan for BTSB and MP-TOTAL installation, become acquainted with the following:

- Power and connectivity at the site of the installation
- Know what is in the product boxes
- Identify the tools necessary to bring onsite for the installation

AVAILABILITY OF THE SITE

There are several critical site services that need to be confirmed by the installer:

1. **Power:** 12VDC Battery for Remote operations.
2. **Communication:** MODBUS RTU, 4-20mA Telemetry
3. **Mount:** The BTSB should be installed where it is easily accessible. A minimum of 4 in (10 cm) of clearance is required for the BTSB lid to be removed.
4. **Orientation:** The BTSB should be installed upright and level to a panel or vertical/horizontal pole.
5. **Site safety:** There must be sufficient clearance around the installation to make connections and to perform maintenance tasks. The installation must be in a location with minimal vibration.



Warning: Externally connected equipment must have an applicable country safety standard assessment.



Explosion hazard: This manual is only for installation of the unit in a non-hazardous location. Use only the instructions and approved control drawing provided in the hazardous location installation manual for installation in hazardous locations.

If you have any questions, contact your Halogen representative.

Copyright © 2023-2024 Halogen Systems, Inc. All rights reserved worldwide.

WHAT'S IN THE BOX

Open the two boxes to show the MP-TOTAL sensor and the BTSB:

Item	Description
Halogen Sensor	MP-Total, multi-parameter chlorine analyzer
BTSB	Bluetooth Smartbox
Battery (Optional)	12.8V, 100Ah/1344Wh LiFePO4 IP68 Battery (2 meters for 6 hours)
Antenna	External Antenna for Cellular Transmission

Note: product technical details be found in the technical specifications at the end of this guide.

Unpack the cardboard box protection liners and carefully remove its contents. The boxes should contain the following items:

BTSB	MP-TOTAL sensor	12.8V Battery	External Antenna
▪ BTSB ▪ Manual	▪ MP-TOTAL sensor ▪ Application Specific Manual	▪ 12.8V 100Ah Battery ▪ Battery Charger ▪ Battery User Manual	▪ 4G LTE Antenna for cellular transmission

If in the unlikely event that something is missing, contact Halogen Systems before proceeding with the installation.

WHAT YOU'LL NEED

You'll need these tools and materials to install the BTSB and the sensor:

- #2 Phillips and flathead screwdrivers
- Screws that are appropriate for mounting the products on a wall or pipe

Depending on how the products will be installed, you may need other tools not described in this guide.

Before proceeding to the next step …

1. Put away the empty boxes and packing material for safe keeping.
2. Determine the best, safest location for mounting the BTSB.
3. Gather all the tools you'll need for the site installation.
4. Don't forget to use our checklist to check off tasks during installation.

Copyright © 2023-2024 Halogen Systems, Inc. All rights reserved worldwide.

Step 2: Install the Bluetooth SmartBox

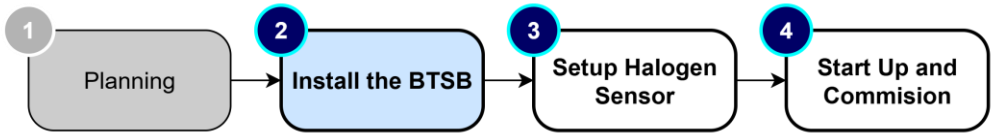

To perform BTSB installation, you will:

- Mount the enclosure to a wall
- Mount the Bluetooth SmartBox to a pole
- Configure the electrical connectors and fittings
- Connect the 4-20mA cabling

MOUNT THE ENCLOSURE

Place the BTSB on a flat surface, like a workbench. The maximum area needed for the BTSB enclosure and the opened front cover is shown below:

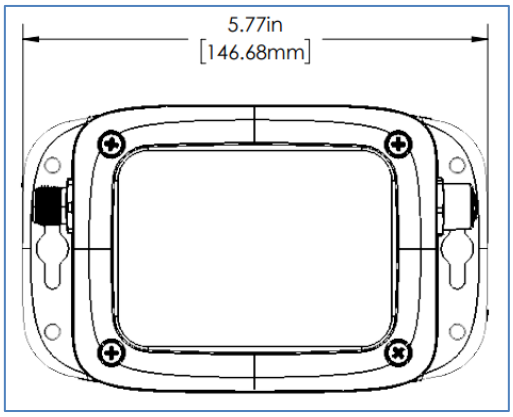

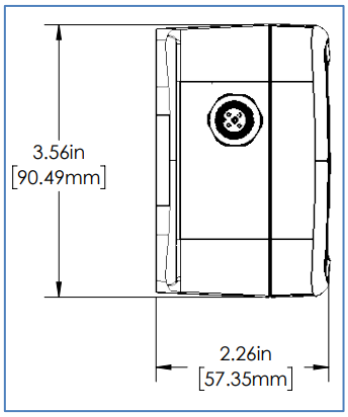

TO MOUNT THE BLUETOOTH SMARTBOX TO A WALL

With the cover closed, carefully place the BTSB on a flat work surface exposing the back of the enclosure. Attach the enclosure to the wall with the appropriate wall-mounting screws (not included) that will firmly hold the enclosure to the wall. Make sure that all four corner mounting tabs are attached.

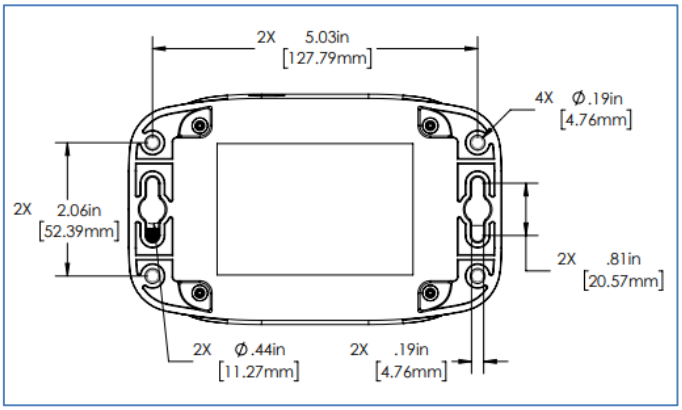

Copyright © 2023-2024 Halogen Systems, Inc. All rights reserved worldwide.

ELECTRICAL CONNECTORS AND FITTINGS

Depending on your BTSB configuration, certain electrical connectors and fittings will be provided for proper installation.

To maintain the enclosure's environmental rating, ensure the following:

- Strain relief must have an electrical cable that is within its specified diameter range.
- Lid must be secured using the cover screws.

Caution: DO NOT overtighten the cover screws. Overtightening the cover screws can damage the lid, jeopardizing the enclosure's environmental rating.

BTSB offers the following connection options:



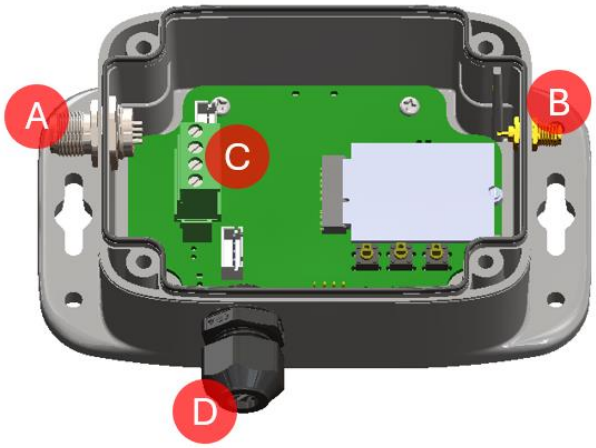

A	M12 4Pin Connector for a Halogen Sensor
B	SMA Connector for External Antenna
C	Labeled Connector for Battery and Solar connection 1. [+] Positive Terminal for Trickle Charging 2. [-] Negative Terminal for Trickle Charging 3. [BAT +] Positive Terminal of Battery 4. [BAT -] Negative Terminal of Battery
D	Strain Relief for 0.105-0.315in cable - 18AWG 2-Conductor Wire Battery Cable - Terminated with Mating Battery Connector

Warning: Do not plug in the battery cable to the battery yet!

Copyright © 2023-2024 Halogen Systems, Inc. All rights reserved worldwide.

To gain access to wiring connections, open the BTSB by unscrewing the four screws on the cover:

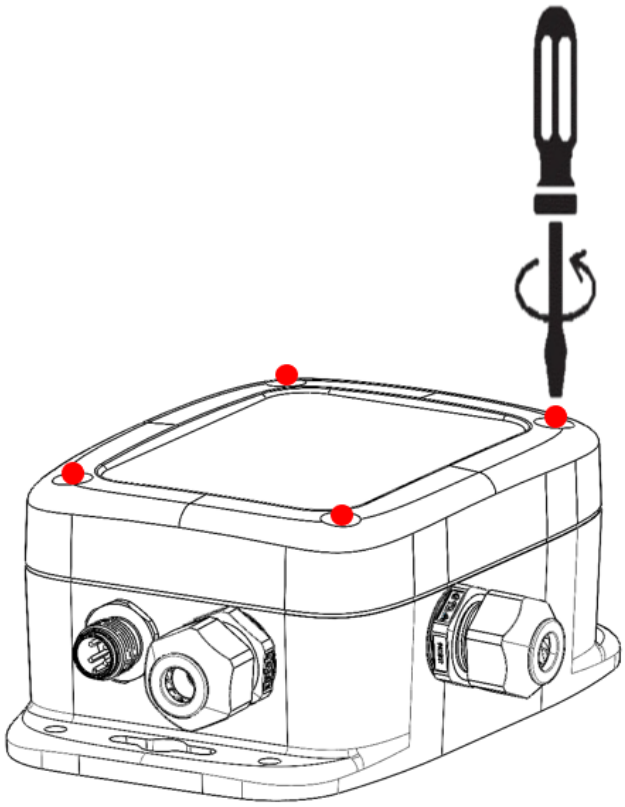

(BATTERY OPTION ONLY) CONNECT THE BATTERY/TRICKLE CHARGING

1. Secure the battery wires to the 4-pin green phoenix terminal connector labeled **BAT+** & **BAT-**
2. Secure trickle charging wires to the 4-pin green phoenix terminal connector labeled **+** & **-**

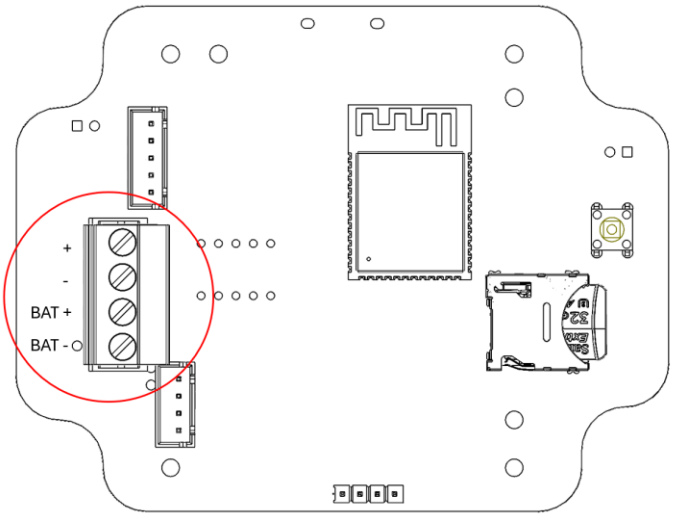

Output	Cabling
+	Positive Terminal for Trickle Charging
-	Negative Terminal for Trickle Charging
BAT +	Positive Terminal for Battery
BAT -	Negative Terminal for Battery

Note: The 4-20mA connection is *not* loop powered. The BTSB 4-20 mA output is an active output.

Copyright © 2023-2024 Halogen Systems, Inc. All rights reserved worldwide.

Step 3: Set up the Halogen Sensor

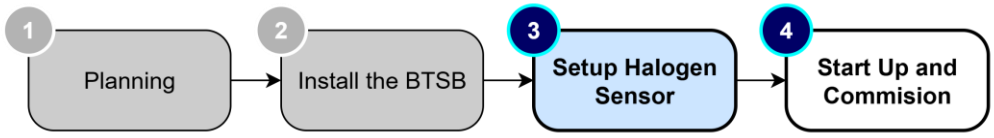

USING THE HALOGEN SIDE STREAM SENSOR

A typical installation consists of the flow cell version of the sensor and the BTSB. (To learn about other installations, visit the Halogen website.)

The *Halogen side stream sensor* is a compact device that connects to a drinking water source using ¼" ID tubing. It requires very little flow and is unaffected by changes in the flow rate; however, long tubing may delay readings. The sensor is enclosed in a clear acrylic flow cell designed to purge air. The inlet pressure should be limited to 60 PSI. The flow rate can be from 0.1 LPM to 1.0 LPM.

The sensor is usually connected to a potable water line, as shown below:

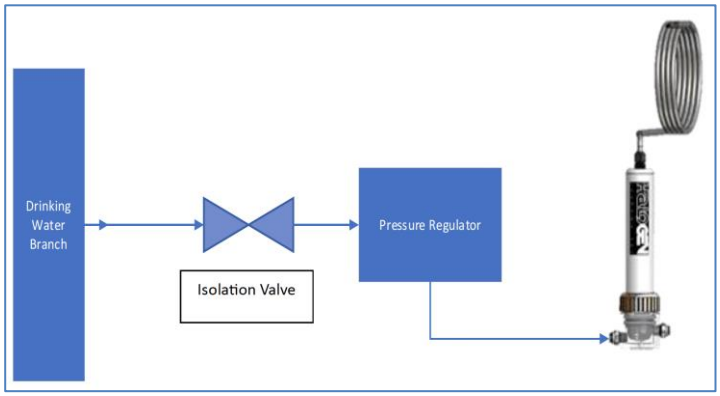

The pressure-reducing valve is needed if the supply water line pressure exceeds 60 PSI/4 Bar. The flow cell is equipped with ¼" *John Guest push-to-connect* (PTC) fittings on both the inlet and the outlet. A short length of tubing is supplied for each connector.

Copyright © 2023-2024 Halogen Systems, Inc. All rights reserved worldwide.

TO INSTALL THE FLOW CELL

The sensor is shipped dry, and once installed and water flow has been established, the pH portion of the sensor will become wet and stabilize, producing accurate readings within 5 minutes. To prepare the Chlorine sensor for operation, do the following:

1. Mount the flow cell on a vertical surface.
2. Insert the sensor into the flow cell with the outlet port of the sensor facing up near the outlet of the flow cell.
3. Seat the sensor firmly (as far as it will go).
4. Hand-tighten the collar thread downward until it stops. Do not force.

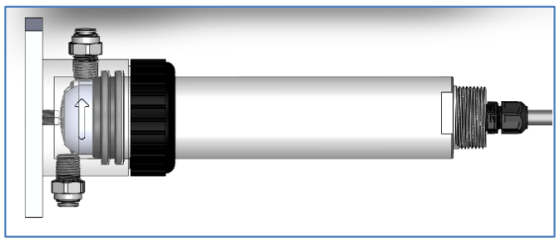

POSITIONING THE FLOW CELL

The flow cell must *always* be installed vertically where the outlet port points upward toward the outlet tubing. This orientation ensures that air bubbles properly clear away from the sensor.

CONNECT DEVICES TO THE M12 CONNECTOR

Connect all digital devices (e.g., sensors and analyzers) to the device connectors on the BTSB (see "Connect electrical connectors and fittings"). Keep the unused device connector caps for future use.

Note: Make sure that service cables do not cause a trip hazard, are too tight, or have sharp bends.

Step 4: Start up and commissioning

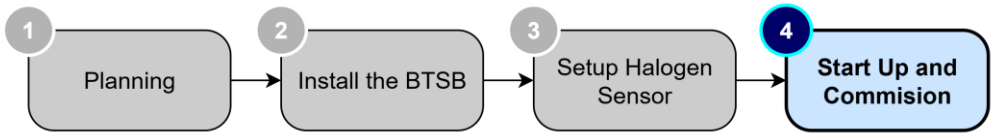

To start up and commission the system, do the following (see "Connect electrical connectors and fittings"):

A. Connect the Sensor to the BTSB via the 4-Pin M12 Connector.

B. Connect the External Antenna to the BTSB via the SMA Connector.

C. Verify that the Battery Cable wires are secured to the terminal block.

D. Verify that the Battery Cable is secured by the strain relief.

Copyright © 2023-2024 Halogen Systems, Inc. All rights reserved worldwide.

APPLY POWER TO THE BLUETOOTH SMARTBOX

Before starting up the BTSB, ensure adequate flow through the system. Secure the battery cable onto the battery.

MONITOR THE BLUETOOTH SMARTBOX START-UP PROCESS

1. Start-up the Halogen Sensor Mobile application.
2. Press the refresh button ⟳, to search for the BTSB
3. Verify that a “New Device” has been detected.

INITIALIZE THE DEVICE

1. Connect to the device
2. Name the Device. Choose a name that will allow the user to recognize the device if multiple devices are being used in the same facility.
3. Select user preferred units
    a. Celsius or Fahrenheit
    b. Display PSU (Relevant for ballast water applications)
4. Select how the BTSB is being powered
    a. For battery operation, the user must select “Battery” for application type. The user must set the measurement frequency. The measurement frequency will collect data at set intervals to preserve battery life. Increasing the frequency of measurements will drain the battery faster, requiring more frequent charging.
    b. For applications where the BTSB is supplied with constant power, the measurements shown will update as soon as the sensor completes a measurement cycle.

Upon start-up, the BTSB displays “Waiting for Sensor Data” until the sensor completes a measurement cycle.

When the BTSB start-up is completed, all pertinent sensor information is displayed along with the sensor data, the “time measured” field serves as an indicator for the user to gauge when the unit last provided a measurement:

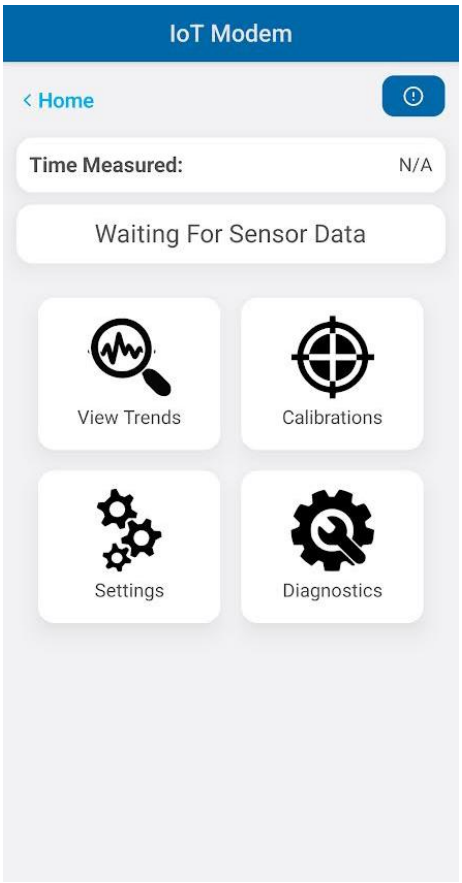

Copyright © 2023-2024 Halogen Systems, Inc. All rights reserved worldwide.

Verify all sensor values displayed on the BTSB. Upon startup, allow the sensor to be installed in the system and be exposed to the process water for 20 minutes before performing any calibrations. After the 20-minute sensor operation period, if the pH requires calibration, perform a pH calibration first before continuing. Check the Chlorine level using a handheld pocket colorimeter and adjust the calibration as needed.

Note: If read-only PLC access is available, calibrate the MP-TOTAL chlorine sensor using the BTSB.

Installation Checklist

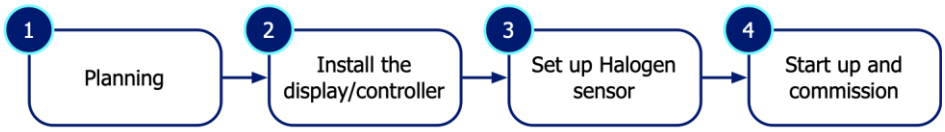

Done	Task
Step 1: Planning	
☐	Make sure power and connectivity services are available at the site
☐	Confirm that everything is included in the box
☐	Gather the tools necessary for the installation
Step 2: Install the Bluetooth SmartBox display/Bluetooth SmartBox	
☐	Mount the enclosure to a wall or to a pole
☐	Configure the electrical connectors and fittings
☐	Connect the 4-20mA cabling (BTSB Option Specific)
Step 3: Set up Halogen sensor	
☐	Learn how the Halogen side stream sensor works
☐	Install the flow cell (it must be vertically oriented)
☐	Connect the sensor to the BTSB, Connect the BTSB to a power source
☐	Allow sensor to warm up for at least 20 minutes
☐	Confirm sensor operation, calibrate as needed
Step 4: Start up and commission	
☐	Power up the Bluetooth SmartBox display/Bluetooth SmartBox
☐	Monitor the Bluetooth SmartBox start-up status on its display panel
☐	Set the time of day
☐	Configure communication

Copyright © 2023-2024 Halogen Systems, Inc. All rights reserved worldwide.

Operation Instructions

Meaning of Indicators

Indicator	Description	Importance
MONO (Monochloramine)	Monochloramine is a disinfectant formed by combining chlorine and ammonia. It is measured in parts per million (ppm).	Monitoring monochloramine levels is crucial for ensuring proper disinfection in systems that use this method. It provides longer-lasting disinfection than free chlorine and can help reduce the formation of certain disinfection byproducts.
pH (Acidity/Alkalinity)	This parameter measures the relative acidity or alkalinity of the water. pH scales from 0 to 14, with 7 being neutral.	The pH level affects chlorine efficacy and the overall balance of water chemistry.
ORP (Oxidation Reduction Potential)	ORP stands for Oxidation Reduction Potential, indicating the water's ability to oxidize contaminants. It is measured in millivolts (mV).	ORP has a logarithmic relationship to Total Residual Oxidants (TRO) and is used for qualitative comparison. A higher ORP value suggests more effective disinfection and oxidation processes, helping to kill organisms and maintain water quality.
PSU (Practical Salinity Unit)	If set instead of conductivity (CND), PSU measures the salinity, referring to the salt concentration in seawater. Practical Salinity Units (PSU) is a unitless measurement.	Salinity affects water chemistry and is crucial for applications involving seawater.
Temp (Temperature)	This indicator shows the water temperature, which can be displayed in degrees Celsius (°C) or Fahrenheit (°F), including below-zero values.	Temperature influences chemical reactions, including chlorine efficacy and sensor performance.
COND (Conductivity)	Conductivity, the default setting, measures the water’s ability to pass an electrical current, expressed in micro-siemens per centimeter (µS/cm).	Conductivity indicates the ion concentration in the water, which can impact corrosion rates and water chemistry balance.
Battery Voltage	This parameter indicates the voltage level that the battery is supplying to the sensor.	The Battery Voltage allows the user to gauge if the battery needs to be recharged.

Copyright © 2023-2024 Halogen Systems, Inc. All rights reserved worldwide.

Calibrating Chlorine Measurement

In process chlorine calibration is an important part of optimizing Halogen Chlorine Analyzer performance. We recommend that calibration be checked or completed as follows:

1. Calibration check upon initial installation and normal process conditions.
2. Check calibration at least every six months.
3. If the value deviates by more than 10% then recalibrate sensor. Since there is some variation in grab sample measurements, we suggest no action unless the deviation is 10%.

All chlorine calibrations can be found in the **Calibrations** menu in the mobile app.

> **Note:** All calibrations should only be completed after the sensor has been running in water for at least 20 minutes.

FAST VS DELAYED CHLORINE CALIBRATION

There are two methods for calibrating chlorine measurements: fast calibration and delayed calibration. Each method is suited for different conditions.

FAST CHLORINE CALIBRATION

Fast chlorine calibration utilizes the most recent sensor chlorine measurement once the chlorine DPD (N,N-diethyl-p-phenylenediamine) value is input. This method is ideal for systems with stable chlorine levels and consistent water conditions.

PROCEDURE:

1. Measure the chlorine level using the DPD method.
2. In the app, Navigate to the **`Calibrations`** menu and select **`Fast Chlorine Cal.`**
3. Input the DPD value and press **`Calibrate.`**
4. The sensor will use the latest chlorine measurement for calibration.

USE CASE:

- Best suited for environments where chlorine levels and water conditions do not fluctuate significantly.

DELAYED CHLORINE CALIBRATION

Delayed chlorine calibration involves holding the sensor's chlorine measurement at the moment the "take sample" command is initiated. This captured measurement is then used to calculate the new calibration value. The sensor readings are maintained for 10 minutes, providing ample time to collect a water sample and complete the DPD reaction.

PROCEDURE:

1. In the app, Navigate to the Calibrations menu and select **`Delayed Chlorine Cal`** .
2. Select **`Take Sample.`**
3. Collect a water sample within 20 minutes.
4. Perform the DPD test on the sample.
5. Input the DPD value and press **`Calibrate.`**
6. The sensor will use the held measurement to adjust the calibration.

USE CASE:

- Suitable for systems with fluctuating chlorine levels or where the DPD test requires several minutes to complete.

> **Note:** If chlorine levels are changing rapidly (within less than one minute between concentration changes), it is not advisable to calibrate the sensor while installed in the system. In such

Copyright © 2023-2024 Halogen Systems, Inc. All rights reserved worldwide.

cases, grab samples are unreliable for reflecting the sensor's measurements accurately at any given moment.

Battery-Operated Chlorine Calibration

In low-power applications, the sensor will be in “Sleep” mode for most of its operation. To perform a calibration, the user will need to command the sensor to power on, wait for the sensor to measure, calibrate, and verify the calibration.

PROCEDURE:

1. Measure the chlorine level using the DPD method.
2. In the app, navigate to the **`Calibrations`** menu and press **`Measure Now.`**
3. Wait for the sensor to complete a measurement cycle.
4. User may select **`Fast Chlorine Cal or Delayed Chlorine Cal.`**
5. Input the DPD value and press **`Calibrate.`**
6. Allow the sensor to complete another measurement cycle to verify that the chlorine was successfully calibrated.

SUMMARY

- **Fast Calibration:** Use for stable conditions; relies on the latest sensor measurement.
- **Delayed Calibration:** Use for fluctuating conditions; holds measurements for 10 minutes for DPD testing.
- **Avoid Calibration:** In rapidly changing conditions (<1 minute), as grab samples will not accurately reflect sensor readings.

CALIBRATE ZERO CHLORINE

`NAVIGATION: MENU | CALIBRATE | CHL MENU | ZERO CALIBRATION`

Calibrating the chlorine zero is a straightforward process that can be executed through the Display Transmitter. This automatic calibration entails the sensor determining an offset based on its signal when the calibration initiates. To ensure precision, follow these steps in water free of chlorine residuals:

1. Navigation:
   - Access the **`MENU`** by pressing the corresponding key.
   - Select '**`Calibrate`**' from the menu options.
   - Within the **`CHL Menu`**, choose **`'Zero Calibration'`**

Note: Use process water for a zero-chlorine calibration. DO NOT USE DISTILLED WATER.

2. Execution:
   - Press **`SELECT`** for each menu option, progressing through the calibration steps.
   - The cursor will advance to "**`Done`**," indicating that the chlorine zero has been successfully established.

Note: Chlorine zero calibration should only be initiated when the sensor reports lower than 0.06. Residuals may cause sensors to read up to 0.06 ppm of chlorine. Utilize another measurement method to verify the water conditions.

Copyright © 2023-2024 Halogen Systems, Inc. All rights reserved worldwide.

Reference Calibrations

Reference Calibration	
CONDUCTIVITY CALIBRATION	1. Navigate to the **Calibrations** menu. 2. Enter the **Cond** Menu. 3. Input the known conductivity value. 4. Press **Select** to save.
ORP CALIBRATION	1. Navigate to the **Calibrations** Menu. 2. Enter the ORP Menu. 3. Input the Known ORP Value 4. Press Calibrate to save.
TEMPERATURE CALIBRATION	1. Navigate to the **Calibrations** menu. 2. Enter the **temp** menu. 3. Input the known temperature value. 4. Press **Calibrate** to save.
SINGLE POINT PH CALIBRATION (Known Value)	1. Navigate to the **Calibrations** menu. 2. Enter the **pH** menu. 3. Select **Single Point pH Cal**. 4. Input known pH value. 5. Press **Calibrate** to save.
2-POINT PH BUFFER CALIBRATION	1. Navigate to the **Calibrations** menu. 2. Select **Use 2 pH buffers**. Note: the system will autodetect both 7 and 10 buffers (not 4 buffer) 3. Rinse sensor and place if first buffer. 4. Press **Next** to start process- sensor motor will turn and turn it off when the pH is stable. 5. Move to rinse water. 6. Select **Next** to proceed with the next buffer. 7. Move to the next buffer and allow sensor to run in liquid for approx. 1 minute before clicking **Next.** 8. Measurement screen will appear after calibration is completed successfully.
ENTERING A FIXED PH VALUE	1. If your pH does not change, you can select a fixed pH that the sensor will use for pH compensation. Enable this in **SETTINGS | MEASUREMENT OPTIONS | PH [DISABLED] |PH FIXED.** 2. The manual pH level to be used is entered in the **pH Fixed** field.

Copyright © 2023-2024 Halogen Systems, Inc. All rights reserved worldwide.

Restoring Factory Calibrations

If the sensor settings and calibrations have been modified and the sensor is not measuring correctly or has persistent error codes that cannot be resolved, restoring the factory default calibrations may help resolve the issue.

> **Note:** Restoring the calibration to factory defaults may require you to re-calibrate the sensor for chlorine to ensure accurate measurements.

Steps to Restore Default Calibrations:

1. In the app, Navigate to **`Calibrations.`**
2. Select **`Set Calibrations to Default.`**
3. Reset calibrations to Default.
4. Upon completion, the sensor will restart, and all calibrations are now set to factory defaults.

By following these steps, you can restore the sensor to its original factory settings and calibrations, which may resolve measurement inaccuracies and persistent error codes.

Configuration

MEASUREMENT OPTIONS

Disabling Measurements

Certain measurements, such as ORP or pH, can be disabled in the measurement sequence. Disabling ORP will reduce the measurement time by 5 to 10 seconds.

Steps to Turn Off ORP or pH Measurements:



1. Navigate to **`Settings.`**
2. Select **`Measurement Options.`**
3. Disable **`pH`** or **`ORP`** with their respective Toggle.

Enabling Intermittent Measurement

Intermittent measurements can be configured to optimize power usage. This mode measures three times and then shuts down the sensor, activating the motor only during the last cycle measurements.

Steps to Enable Intermittent Measurements:

1. Navigate to **`Settings.`**
2. Select **`Power Saving Settings.`**
3. Enable **`Intermittent`** with the Toggle.
4. Set the **`Collect Data Every X minutes`** interval.

After the sensor completes three measurements, the BTSB will go into Sleep Mode. In Sleep Mode, the user is able to connect to the BTSB and view the sensor's last measurement. If the user

> **Note:** Intermittent measurements should only be used for battery operation. Increasing the measurement frequency will drain the battery faster.

Copyright © 2023-2024 Halogen Systems, Inc. All rights reserved worldwide.

Manually Entering a Fixed pH Value

This setting allows the sensor to use a manually entered pH value instead of measuring the actual pH. This is useful if your pH remains constant and you prefer to use a fixed pH value for compensation.

Steps to Enable and Enter a Fixed pH Value:

1. Navigate to **`Settings.`**
2. Select **`Measurement Options.`**
3. Disable **`pH`** with the Toggle.
4. Manually input the **`Fixed pH`** Value.

ADDITIONAL FEATURES

- **`TEMP IN FAHRENHEIT:`**
  - **Navigation:** **`Settings | Measurement Options | Temperature`**
  - **Description:** Toggles the temperature display between Celsius (°C) and Fahrenheit (°F).
  - **Usage:** Choose your preferred temperature unit for display.
- **`KEYCODE:`**
  - **Navigation:** **`Settings | Advanced Settings | Pin Code`**
  - **Description:** When enabled, requires an operator to enter a specific string of key presses to allow calibration.
  - **Usage:** Adds a security measure to prevent unauthorized calibration.By configuring these display options, you can customize the device's output to better suit your operational needs and preferences.

4-20 MA CONFIGURATION

Defining 4-20 mA Outputs

The 4-20 mA output channels can be customized to output any of the available measurement parameters. Follow the steps below to configure the outputs:

Steps to Define 4-20 mA Output Channels:

1. Navigate to the menu:
   - Press **`MENU`**.
2. Access configuration options:
   - Select **`Configuration`**.
3. Enter **`4-20 mA OUTPUT SETUP`**
4. Define output channels:
   - Choose **`Define Output Channels`**.
5. Assign measurement parameters to each channel as needed.

Default Channel Output Assignments:

- **`Out 1:`** `Chlorine`
- **`Out 2:`** `Conductivity`
- **`Out 3:`** `Temperature (°C)`
- **`Out 4:`** `pH`

Copyright © 2023-2024 Halogen Systems, Inc. All rights reserved worldwide.

By following these steps, you can configure the 4-20 mA output channels to suit your specific monitoring needs, ensuring that the most relevant parameters are available for external systems and logging.

Configuring 4 – 20 mA Upper Limit

The upper limit setting allows you to define the maximum measurement parameter value that corresponds to the 20 mA maximum output. It is important to set this value to match the upper limit value of the PLC to which the display is connected.

Steps to Set the 4-20 mA Upper Limit:

1. Navigate to the menu:
   - Press **MENU**.
2. Access configuration options:
   - Select **Configuration**.
3. Configure the 4-20 mA outputs:
   - Choose **4-20 mA OUTPUT SETUP**.
   - **Set 4-20 mA UPPER LIMIT**.
4. Set the upper limit for each measurement parameter as needed.

Default Upper Limit Settings:

- **Chlorine:** 10 ppm
- **Conductivity:** 65000 µS/cm
- **PSU (Practical Salinity Units):** 50
- **Temperature (°C):** 50
- **pH:** 12
- **ORP (Oxidation Reduction Potential):** 1100 mV
- **Pressure:** 200 psi

Configuring 4 – 20 mA Lower Limit

The lower limit setting allows you to define the minimum measurement parameter value that corresponds to the 4 mA minimum output. It is important to set this value to match the PLC to which the display is connected.

Steps to Set the 4-20 mA Lower Limit:

1. Navigate to the menu:
   - Press **MENU**.
2. Access configuration options:
   - Select **Configuration**.
3. Configure the 4-20 mA outputs:
   - Choose **4-20 mA OUTPUT SETUP**.
   - **Set 4-20 mA LOWER LIMIT**.
4. Set the upper limit for each measurement parameter as needed.

Default Upper Limit Settings:

- **Chlorine:** 0 ppm
- **Conductivity:** 0 µS/cm
- **PSU (Practical Salinity Units):** 0

Copyright © 2023-2024 Halogen Systems, Inc. All rights reserved worldwide.

- **Temperature (°C):** 0
- **pH:** 5
- **ORP (Oxidation Reduction Potential):** 0 mV
- **Pressure:** 20 psi

By setting these limits, you ensure that the measurement parameters are correctly scaled to the 4-20 mA output range, providing accurate and consistent data to the PLC and other connected devices.

Calibrating 4 – 20 mA DAC Output

Digital-to-Analog Converter output can be calibrated to match PLC and Halogen readings.

MODBUS COMMUNICATION OPTIONS

This section outlines the Modbus configuration options available through the menu, enabling smoother communication with a PLC and management of sensor addresses.

MENU SELECTION	DESCRIPTION
CHANGE ADDRESS	Allows you to change the address of a connected sensor.
BAUD SETTINGS	The default baud rate is 19,200. The baud rate and parity can be modified to better suit the user's needs and/or preferences.

These options provide essential tools for configuring and managing the communication between the Chlorine Analyzer and connected PLC systems, ensuring reliable and efficient operation.

AVERAGING MEASUREMENTS

The averaging measurements setting allows you to average a selected number of measurements for each parameter. This can be particularly useful for water quality monitoring and process control, as it helps to smooth out short-term fluctuations and provides a more stable reading.

When to Use Averaging:

- **Water Quality Monitoring:** Averaging measurements can help in obtaining a more accurate representation of water quality over time, reducing the impact of transient spikes or drops.
- **Process Control:** For processes that require stable input data to adjust or control decisions, averaging can provide more consistent data, leading to better control and decision-making.
- **Noise Reduction:** In environments with high levels of measurement noise, averaging can help in minimizing the impact of these disturbances on the measured values.

Default Setting:

- The default setting for averaging is no filter, indicated by a value of "1".

Configurable Range:

- The averaging value can be set to any integer between 1 and 20.

Menu Navigation: To configure the averaging of measurements, follow these steps:

1. Navigate to **Settings.**
2. Select **Advanced Settings.**
3. Set the **Averaging Value.**
    a. Choose the desired averaging value (between 1 and 20).

Copyright © 2023-2024 Halogen Systems, Inc. All rights reserved worldwide.

Warnings and Error Codes

In the operation of the Chlorine Analyzer, the system provides vital feedback in the form of warnings and error codes. These warnings and codes are reported by the sensor when specific conditions or situations arise, such as out-of-range calibrations or the sensor operating without water. It is essential to understand and address these error codes promptly to maintain accurate and reliable measurements.

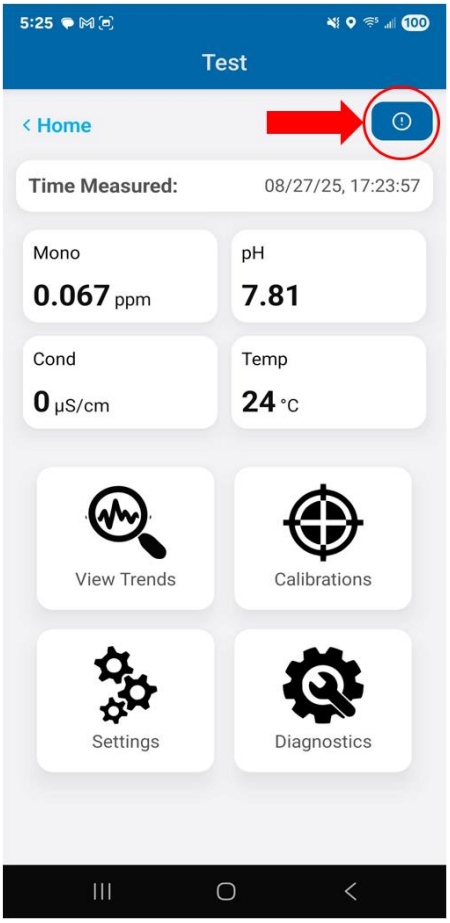

The warning and error codes will be shown in the top right corner of the Halogen Sensor Mobile App.



Solid – No Sensor Warning and/or Error



Flashing – The Sensor has a warning and/or Error

Copyright © 2023-2024 Halogen Systems, Inc. All rights reserved worldwide.

These warnings and error codes are categorized into three types:

Type	Description
Warnings	Indicated by an exclamation point (!) in the upper right corner of the display. A warning indicates that a measurement is out of tolerance, or a maintenance task is upcoming. Warning messages can be viewed by pressing the down arrow on the main window. Pressing select on the warning message will display the warning description.
Level 1 Error Codes	Displayed on the display transmitter. These errors may impact accuracy of measurements if left uncorrected.
Level 2 Error Codes	These types of faults, detected by the system, stop the cycle pending removal or correction of the condition. These errors will generate an alarm condition that will cause the Display to flash the backlight and the 4-20 mA output to go negative (≤ 3.8 mA output).

Copyright © 2023-2024 Halogen Systems, Inc. All rights reserved worldwide.

WARNINGS (!)

Message	Cause	Corrective Action	Effect on System
Chlorine Zero	Chlorine zero calibration is out of range.	Use 'Restore to Factory Defaults' command then retry. If unsuccessful, manually set chlorine zero.	Chlorine measurements at low concentrations may be inaccurate until warning is cleared.
Chlorine Slope	Chlorine slope calibration out of tolerance.	Use 'Restore to Factory Defaults' command to clear errors. Confirm reference chlorine value and retry calibration. If still unsuccessful, clean sensor electrode per product guide.	Chlorine measurement may not be accurate across entire operation range.
pH Calibration Slope	Two-point pH slope calibration out of tolerance. pH sensor may require replacement.	Use 'Restore to Factory Defaults' command and attempt 10 buffer recalibration. Replace the pH sensor if recalibration fails.	pH measurements may not be representative of water conditions. If pH measurement erratic, chlorine measurement will be affected.
pH Calibration Offset	Single point or 7 pH buffer calibration out of tolerance. pH sensor may require replacement.	Use 'Restore to Factory Defaults' command and attempt 7 buffer recalibration. Replace the pH sensor if recalibration fails.	pH measurements may not be representative of water conditions. If pH measurement erratic, chlorine measurement will be affected.
Replace Wear Parts	Triggered after sensor has been running for 8040 hours. Wear parts must be replaced within specified number of days.	Replace wear parts and reset wear part countdown timer.	Sensor cleaning and mechanical performance are approaching sub optimal conditions. Chlorine and reference measurements may be adversely affected.

Copyright © 2023-2024 Halogen Systems, Inc. All rights reserved worldwide.

LEVEL 1 ERROR CODES

Error Code	Meaning	Cause	Corrective Action	Effect on System
1	Air in Sensor (10 cycles)	Similar to Error 31 but occurs for 10 cycles	Power the sensor on and off several times or send clear error command. Ensure the sensor is immersed in water. Check the installation to ensure the outlet port is vertical or perpendicular to flow (ballast pipe). Check the orientation, which should be mounted at 90° to 270°. Perform Function Test.	Measurements will be inaccurate and/or erratic. Errors will clear automatically when trigger condition is cleared.
31	Air in Sensor	Air is trapped inside the sensor	The sensor will enter a priming function to remove the air. The error will clear automatically when the condition is corrected. If error will not clear, confirm the sensor is immersed in water. Then, power cycle system or send clear error command. If error persists, perform Function Test.	Erratic chlorine measurement. Errors will clear automatically when trigger condition is cleared.

LEVEL 2 ERROR CODES

Error Code	Meaning	Cause	Corrective Action	Effect on System
33	Motor Stalled	Debris is present in the sensor cover	Power cycle sensor or send clear errors command. Check for debris or impeller binding in the sensor cover and refer to the Wear Parts Replacement instructions for disassembly instructions. Perform Function Test.	4 - 20 mA output negative. Erratic or 0 ppm chlorine regardless of water conditions.
10	Sensor Communication Fault	Sensor not responding or missing, no communications with the temperature sensor board.	Check sensor connections. Initiate Clear Errors Command. Replace sensor with exchange unit.	4 - 20 mA output negative.

WARNING – CHLORINE ZERO OUT OF RANGE

Meaning: Chlorine Zero calibration was completed when the sensors raw signal was outside the acceptable range. This is often a result of completing a chlorine zero calibration when chlorine is still present in the water.

Corrective Action:

1. Use the ‘Restore Settings to Factory Defaults’ command to clear the error.
2. Recalibrate chlorine zero or manually write chlorine zero (Section 3.2.2).

Copyright © 2023-2024 Halogen Systems, Inc. All rights reserved worldwide.

WARNING – PH OFFSET OUT OF RANGE

Meaning: that pH offset calibration was completed when there was too large a difference between the Halogen Sensor pH mV reading and the attempted pH calibration value. Offset is calibrated via a single point known pH calibration or during pH 7 buffer calibration. This error can also be triggered if the pH measurement is turned off and a pH calibration is attempted. The acceptable offset range is 0 ± 40 mV.

Corrective Action:

Option 1: Recalibrate or replace pH.

1. Use the 'Restore Settings to Factory Defaults' command to clear the error.
2. Confirm that pH measurement is turned on by navigating to MENU | CONFIGURATION | DISPLAY OPTIONS.
3. Select 'Do pH' and use the Up and Down arrows to put an X next to 'Do pH'. X indicates that measuring pH is enabled. Press SELECT to save.
4. Place sensor in pH 7 Buffer and monitor pH mV value until it is stable.
5. Determine if mV value is within the acceptable mV range.
6. Attempt 7 Buffer calibration if within range.
7. If outside of range, replace pH sensor per the Operation and Maintenance Manual.

Option 2: Disable pH

1. Use the 'Restore Settings to Factory Defaults' command to clear the error.
2. Navigate to MENU | CONFIGURATION | DISPLAY OPTIONS
3. Select 'Do pH' and use the Up and Down arrows to put an '–' next to 'Do pH'. The '—' indicates that measuring pH is disabled.
4. Press SELECT to save.

Note: When pH is turned off, the sensor will continue to report pH at 8.05 (or manually fixed pH value) but no longer measure actual water pH. If the system experiences large swings in pH, the sensor will no longer be compensating for the changes in water pH and accuracy may be affected minimally.

WARNING – PH SLOPE OUT OF RANGE

Meaning: A pH 10 buffer calibration was attempted but there was too large a difference between expected pH mV and actual pH mV. The pH slope was out of range a reverted to the maximum acceptable value. The acceptable pH slope range is -79.7 to -39.7. The expected pH mV value in 10 buffer is approximately -180 mV.

Corrective Action:

1. Use the 'Restore Settings to Factory Defaults' command to clear the error.
2. Place the sensor in pH 10 Buffer and monitor pH mV to determine if the mV value is within 30 mV of -180 mV.
3. If within range, attempt pH 10 buffer calibration.
4. If outside of range, replace the pH sensor per the Operation and Maintenance Manual.

ERROR 31 – AIR IN SENSOR

Meaning:
Error 31 is triggered when the AUX voltage is out of range. The acceptable range is -1900 to 1900. This error is most observed when the sensor is running without water, or if air becomes trapped inside the sensor end.

Corrective Action:

Step 1: Clear Errors or Restart Sensor

Option 1: Restarting the Sensor via the Mobile App

1. Navigate to **`Diagnostics.`**
2. Swipe on the "**`Restart System`**" function.
3. The display will power down, and the sensor will restart.

Copyright © 2023-2024 Halogen Systems, Inc. All rights reserved worldwide.

4. Errors will be cleared, and the sensor will self-prime.

Option 2: Clearing Errors via Halogen Software (MP-TOTAL Connect)

Using the Halogen Software (MP5A Connect):

1. Navigate to the Diagnostics window.
2. Check the board to confirm errors.
3. Press "Clear Errors."

Option 3: Unplugging and Replugging the Sensor

Unplug the sensor from the power supply and then plug it back in to initiate a sensor restart.

Step 2: Monitor Sensor Function and Data Output

After performing the error-clearing process, monitor the sensor's function and data output:

1. Check if the motor is spinning unimpeded.
2. Observe whether the motor changes direction three times and then starts spinning in one direction normally.
3. Ensure that water is flowing from the outlet port in a constant stream.
4. If, after performing the above steps, the error condition persists and Error 31 cannot be reliably cleared, the chlorine sensor may be defective or damaged. In such rare cases, the sensor will require replacement. See Error 1 for more information.

ERROR 33 – MOTOR ERROR

Meaning:

These errors are triggered by changes in the motor's RPM detected by the sensor's tachometer. The tachometer measures only the revolutions of the internal motor and not those of the impeller. Therefore, it is possible to have a bonded impeller while the motor continues to spin internally.

Corrective Actions:

Step 1: Initiate Disable Error 33 Command

Initiate the **`Disable Error 33`** command using the following steps:

1. Navigate to **`Diagnostics.`**
2. Enable “**`Disable Error 33`**” with the Toggle.

Step 2: Remove Sensor from the System and Perform Function Test

If the error persists, proceed with the following steps:

1. Remove the sensor from the system as per the specific model type's installation manual.
2. Perform a Function Test on the sensor outside of the process. Ensure that the sensor is adequately powered and communicates during this test.

Step 3: Check Impeller for Free Rotation

1. If the Function Test fails or the impeller does not spin freely when the sensor is powered and communicating, proceed to remove the sensor cover following the Wear Parts Replacement instructions.
2. Power on the sensor and check if the impeller can spin freely when the sensor is powered and communicating.

Step 4: Exchange Sensor with Replacement Unit

1. If the impeller no longer spins or remains stuck, exchange the sensor with a replacement unit as per Halogen Systems' replacement procedures.
2. Contact Halogen Systems for further assistance in obtaining a replacement sensor.

Copyright © 2023-2024 Halogen Systems, Inc. All rights reserved worldwide.

Note: Error 33 and Error 35 are motor-related errors, and their corrective actions are similar. These actions are essential to ensure the sensor's proper functioning and prevent further motor-related issues.

ERROR 1 – PERSISTENT ERROR 31

Meaning: Error 1 is triggered after 10 consecutive cycles with Error 31 occurring.

Corrective Action:

Follow Error 31 corrective action steps. If unable to clear, the chlorine electrode or circuit board may have failed, and the sensor will require replacement. See Section 5.4 Field Unrepairable Issues for additional information.

ERROR 10 – ELECTRONICS FAILURE – TEMPERATURE SENSOR FAILURE

Meaning: Error 10 is a result of a communication problem with the temperature sensor circuit board, specifically Electronically Erasable Programmable Read-only Memory or EEPROM. This is most often the result of communication loss, damage, or fault within the temperature sensor board. This failure can be identified by the temperature measurement getting locked on a single value or the appearance of an unusual temperature such as -300 °C. Other indicators include loss of Serial Number (SN appears as 16553565535), loss of stored calibration values, loss of stored settings, and inaccurate measurement parameters.

Corrective Actions:

1. Power cycle or system restart.
2. Reset calibrations to default.
3. If the above fail, replace with spare analyzer, and contact Technical Support.

Copyright © 2023-2024 Halogen Systems, Inc. All rights reserved worldwide.

Maintenance

BATTERY CHARGING

A fully charged battery will provide 14.6V. The battery voltage level can be viewed in the following screen:

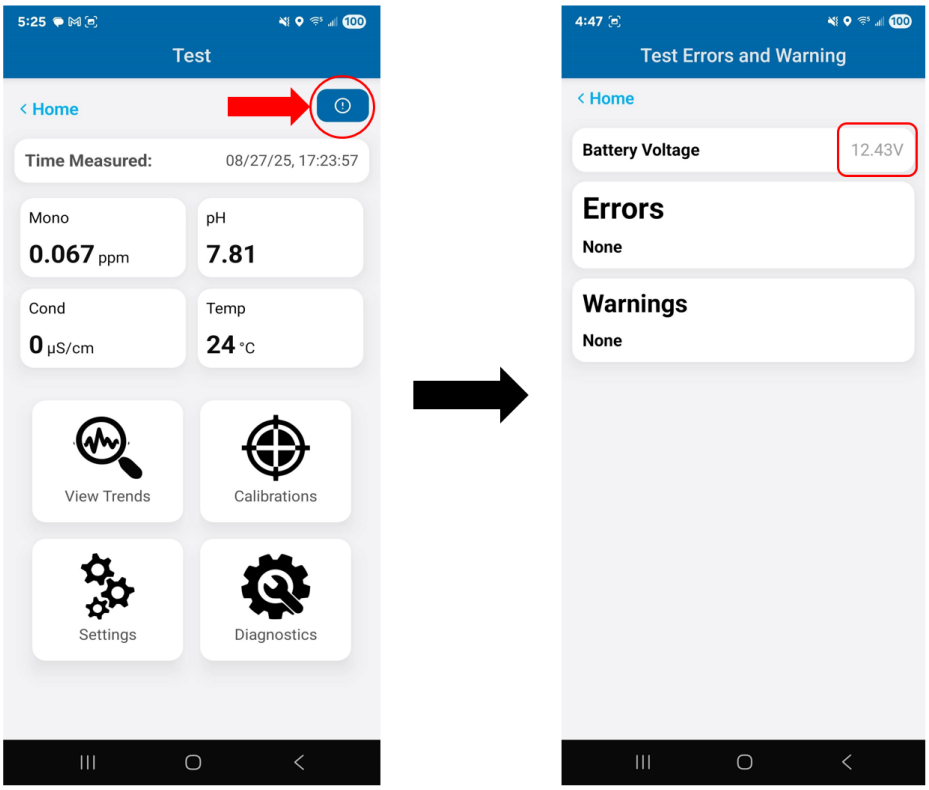

When the battery drops below 12V. The battery should be

STOP FUNCTION

WASTEWATER MAINTENANCE

SENSOR CLEANING

FLOW CELL CLEANING

ANNUAL MAINTENANCE

Copyright © 2023-2024 Halogen Systems, Inc. All rights reserved worldwide.

Replacing Wear Parts

Kit Contents:

1. Cover Screws (x2)
2. Sensor Cover (x1)
3. Cleaning Beads (x2 packs of 15 ea.)
4. Impeller (x1)
5. Wear Ring (x1)

Assembly Overview:

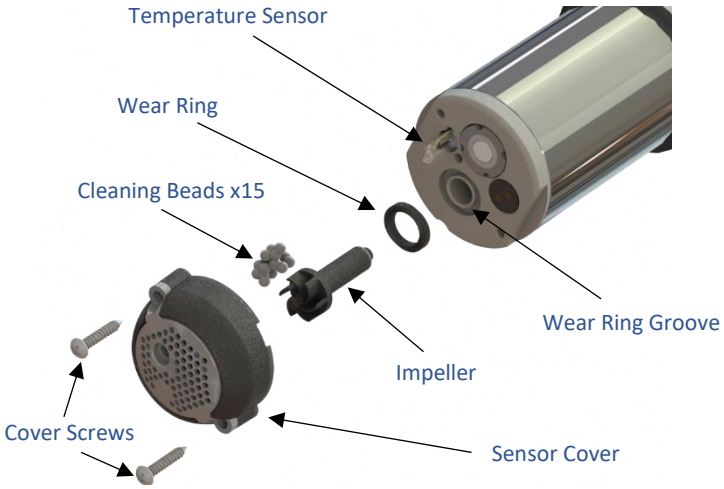

Figure 1: Exploded assembly - bottom view.

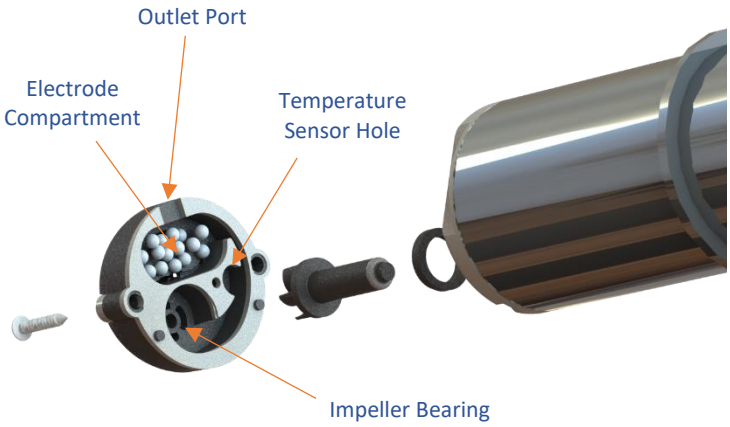

Figure 2: Exploded assembly - correct cleaning bead location.

To remove wear parts: Remove 2x cover screws from the sensor cover. Maintain pressure on the sensor cover and rotate the sensor vertically. Remove the sensor cover and screws from the sensor end while keeping the sensor vertical. Remove the impeller from the impeller well. Impellers are magnetically coupled and should be removed easily. Remove the wear ring. All removed parts can be discarded. If fouling is present, it is permissible to clean the sensor end with Isopropyl Alcohol and lint-free cloth. Take care not to scratch the electrode surface.

To install new wear parts: Remove parts from the replacement wear kit. Install new wear ring into wear ring groove. Install new impeller into impeller well. Place 15 cleaning beads into the sensor end cover (Figure 2). Beads must only be present in the electrode compartment. Align temperature sensor and impeller with respective holes in sensor cover. Lower sensor into sensor cover. Twist the cover gently until the sensor cover guide pins drop into the sensor end. Holding the sensor cover in place, insert, and tighten 2x cover screws until there is no gap between the sensor cover gasket and the sensor end. To prevent motor binding, do not over-tighten.

To function test sensor: Power on the sensor and verify that the impeller spins freely. If the impeller does not spin freely, loosen the cover screws ¼ turn at a time until the impeller can be heard spinning. The sensor can also be run in a bucket with water to verify the water stream from the outlet port.

Copyright © 2023-2024 Halogen Systems, Inc. All rights reserved worldwide.

Replacing and calibrating the pH Sensor

This procedure outlines the removal and replacement of pH reference electrode for Halogen Systems Chlorine Analyzers that possess pH. PH probes utilize a glass membrane and should be handled with care during assembly to prevent damage.

Materials Required:

1. Philips #1 Screwdriver
2. pH Removal Tool (included)
3. pH 7 Buffer
4. pH 10 Buffer
5. Deionized water (tap water OK)

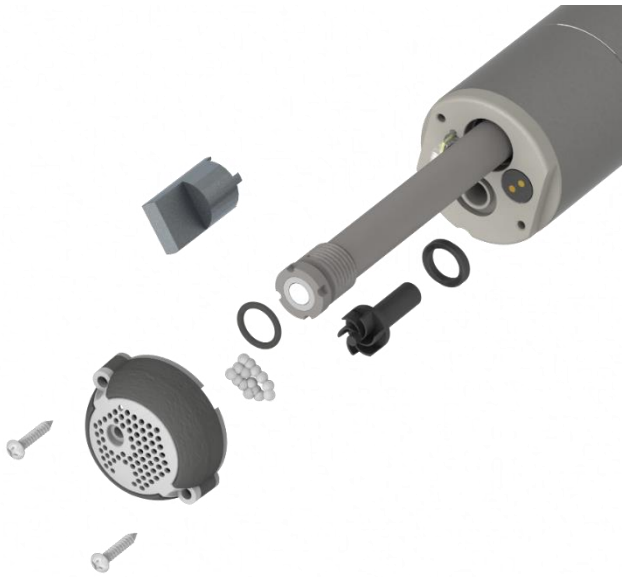

Instructions:

Removal

1. Turn off power to sensor and remove from process.
2. Remove sensor cover screws using Phillips screwdriver.
    a. IMPORTANT: Hold sensor cover in place to prevent cleaning balls from spilling.
3. Rotate sensor vertically to prevent cleaning ball release.
4. Remove sensor cover and set aside.
5. Use pH tool to remove pH electrode.

Installation

1. Remove protective caps from replacement electrode and clean with tap water to remove storage solution.
2. Verify presence of O-ring.
3. Insert pH electrode into sensor end by hand.
4. Tighten with pH Removal Tool until glass membrane is flush with sensor end. NOTE: Avoid tool contact with glass membrane.
5. Verify all cleaning balls (15) are in sensor cover impeller cavity.
6. Reinstall sensor cover by tightening cover screws until gasket is lightly compressed.
7. Return power to sensor to verify unimpeded impeller operation.
    a. If impeller is binding and sensor is unable to prime, loosen cover screws ¼ turn at a time until normal operation resumes.

Calibration

1. Place sensor into pH 7 buffer and power on.
2. Swirl sensor until buffer can be seen coming from ejection port.
3. Allow at least 2 minutes for sensor to equilibrate.
4. Initiate 7 buffer calibration via Display Module, PLC, or MP5A connect program.
5. After calibration is successful, rinse sensor with tap water.
6. Place sensor in 10 buffer.
7. Swirl sensor until buffer can be seen coming from ejection port.
8. Allow at least 2 minutes for sensor to equilibrate.
9. Initiate 10 buffer calibration via Display Module, PLC, or MP5A connect program.
10. After successful calibration, return sensor to process.

Copyright © 2023-2024 Halogen Systems, Inc. All rights reserved worldwide.

Flow Cell Maintenance

Proper maintenance of the flow cell ensures optimal performance and longevity of your Chlorine Analyzer. Follow these guidelines for effective flow cell maintenance:

1. **Cleaning:**
    - The flow cell is transparent, allowing for easy inspection of the sensor condition without interrupting operations.
    - Clean the flow cell by wiping it down or washing it with detergents or diluted acids.

    Important: Do not use solvents for cleaning, as they may cause the acrylic to craze or crack.

2. **O-Ring Maintenance:**
    - Inspect the O-ring annually. Replace it if it appears worn or stiff.
    - Lubricate the O-ring with silicone grease to ensure a good seal and to prolong its life.
3. **Tubing Replacement:**
    - Replace the tubing at least once a year.
    - Immediately replace any tubing that is brittle, cracked, or leaking.
    - Replace old, discolored, fouled, or damaged tubing with new tubing of the same diameter to maintain proper functionality.

By adhering to these maintenance practices, you can ensure the reliable and efficient operation of your Chlorine Analyzer's flow cell.

5 YEAR MAINTENANCE REBUILD

It is recommended to have the factory perform a comprehensive 5-year rebuild of the sensor. This rebuild includes replacing the motor assembly and any worn parts, ensuring the sensor's continued accuracy and reliability.

Copyright © 2023-2024 Halogen Systems, Inc. All rights reserved worldwide.

Micro SD Card Access

The SD card can provide invaluable information to our technical support team regarding the status of the Halogen sensor when errors or faults occur. The BTSB logs each sensor measurement into the SD card. The information within the SD card can only be accessed by physically removing the Micro SD card from the BTSB and sharing the stored Logfile via a PC or laptop equipped with a Micro SD card reader.

Warning: Do not power the BTSB while accessing the inside of the unit.

Instructions:

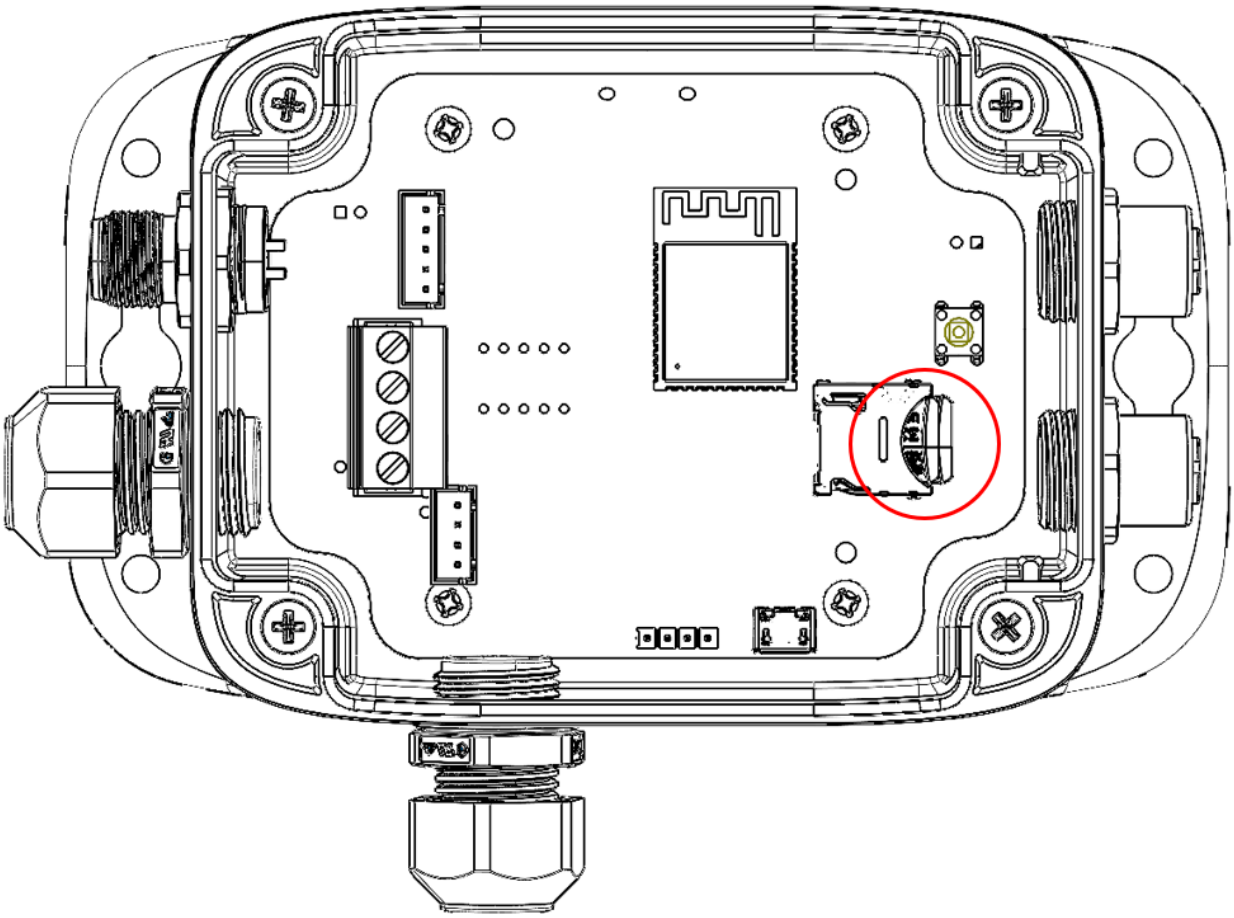

Removal

1. Unfasten the four cover screws on the BTSB faceplate.
2. Open the BTSB to access the PCB found inside the enclosure.
3. Locate the MicroSD card housed in the SD card holder as shown above.
4. Gently press down on the SD card before pulling it out of the BTSB.
5. Attach the SD card into a device that has an SD card reader.

Installation

1. With the SD card label facing away from the operator during installation, seat the SD card into the SD card holder.
2. Secure the SD card by pressing it down into the SD card holder.
3. Close the BTSB and reattach the cover screws before powering on the unit.

Note: If installed correctly, only the top 1/3” of the SD card will be exposed.

Copyright © 2023-2024 Halogen Systems, Inc. All rights reserved worldwide.

Troubleshooting/FAQ

TROUBLESHOOTING

Troubleshooting Steps

Step 1: Check Physical Connections
Step 2: Verify Power Supply
Step 3: Check Settings
Step 4: Monitor Data Output
Step 5: Conduct Function Test
Step 6: Isolate the Specific Issue

'Sensor Not Found'

Symptoms

- **`'Sensor Not Found'`** Error on display screen

Corrective Action

1. Check Connections:
    - Inspect the connection and wiring to the Sensor Module for any loose or swapped connections.
2. Power Cycle:
    - After correcting any wiring issues, power the display off and then back on.
3. Verify Sensor Operation:
    - Check if the sensor motor is working.
    - If the motor is not working, check if the power and ground lines are wired backward. Correct the wiring if necessary.
4. Check for Shorts:
    - There could be a short in the wiring to the sensor. Use an ohm meter to check for continuity.
    - Test Resistance:
    - Check the resistance of all four wires to ground (sensor housing) using an ohm meter.
    - There could be an internal short from the wires to the sensor, especially if a valve adapter was added. Resistance should be open (infinite resistance).
    - If the motor is working but communication lines are still not functioning, the com lines may be reversed. Check and correct.
5. Sensor Replacement:
    - If the sensor still does not communicate after following these steps, replace it with a new sensor.

Reference Measurement Inaccuracy

Symptoms

- Inaccurate TRO due to incorrect pH, Conductivity, or Temperature reporting.
- Inaccurate pH, Conductivity, or Temperature reporting

Corrective Action

- See Reference Calibration Section

Copyright © 2023-2024 Halogen Systems, Inc. All rights reserved worldwide.

Erroneous Chlorine Calibration

Symptoms

- Inaccurate TRO
- Erratic TRO

Corrective Action

- See Chlorine Calibration section.

Inadequate Sampling and Air

Symptoms

- Persistent Error 31
- Continuous 0 ppm reporting during ballasting
- Erratic TRO measurement

Corrective Action

- Perform power cycle or send clear errors command.
- Perform Function Test.

Mechanical Operation

Symptoms

- Loud motor sound
- 0 ppm reporting during ballasting
- Error 33/35 presence

Corrective Action

- Function Test.
- Adjust cover tightness.
- Replace Wear Parts.

COMMON FIELD REPAIRABLE ISSUES

A. Impeller Binding – Overtightening of Cover Screws
Failed pH Probe
Erroneous Calibration
“Error Sensor Not Found”

Copyright © 2023-2024 Halogen Systems, Inc. All rights reserved worldwide.

FREQUENTLY ASKED QUESTIONS

Issue (or what if this happens)	Answer
Why is the sensor not communicating over Modbus?	Confirm wiring. Verify Baud and Parity settings of sensor match master unit. Default for the sensor are 19200 Baud | No Parity
Why is my Chlorine Measurement Erratic?	Air bubbles often cause erratic chlorine measurement. Erratic measurement can also be caused by a defective pH probe or chlorine region switch. See Ballasting Calibration section for more information.
Why is my sensor always reading 0 ppm?	Are there any error codes present? Perform function test to verify motor function. Check sensor settings and reset calibrations to factory defaults. Contact Halogen Support.
Why is Chlorine Reading Low or 0 ppm?	Low chlorine measurement can be caused by inadequate sensor sampling. Confirm sensor orientation, flow to sensor, and motor operation. Perform function test. Restore to factory defaults. Contact Halogen Support.
Why is Chlorine Reading High?	A field calibration to an inaccurate reference can cause high measurements. Confirm flow to sensor. Restore factory default calibrations or recalibrate sensor.
How do I change the sensor Modbus address?	See the 'Changing Modbus Address' instruction in the Halogen Software Guide.
How do I fix inaccurate pH measurements?	Calibrate or replace the pH electrode. pH measurement can also be turned off if calibration or replacement is not available.

Contact Halogen support if you have any questions. We're here to help!

Copyright © 2023-2024 Halogen Systems, Inc. All rights reserved worldwide.

Appendix A: Bluetooth SmartBox Technical Specifications

Overall*	
Description	Microprocessor-controlled, menu-driven Bluetooth SmartBox that communicates with the sensor
Dimensions	6.3" H x 6.3" W x 4" D (160 x 160 x 101.6 mm)
Weight	1 lbs
Enclosure rating	IP 68, NEMA 250 type 4X, Plastic enclosure
Compliance certifications	CE, ETL certified to UL and CSA safety standards (with all sensor types), FCC, EU, UKCA
Warranty	12 months

Environmental*	
Operating temperature	-20 to 60°C (-4 to 140°F) (8W (AC)/9W (DC) sensor load) -20 to 45°C (-4 to 113°F) (28W (AC)/20W (DC) sensor load) Linear derating between 45 and 60°C (-1.33 W/°C)
Storage conditions	-20 to 70°C (-4 to 158°F), 0 to 95% relative humidity, non-condensing
Altitude	2000 m (6562 ft) maximum
Pollution degree	4
Temperature	Minimum: -40°F (40°C) Maximum: 167°F (75°C)

Power, data storage, and connectivity*	
Power requirements	12-24VDC; 1 A
Measurement interfaces	Two MP-TOTAL Modbus connectors
Communication	Digital: Modbus RTU standard Cellular – 4G LTE Bluetooth LE

* Subject to change without notice

Copyright © 2023-2024 Halogen Systems, Inc. All rights reserved worldwide.

Appendix C: Battery Technical Specifications

Overall*	
Size	10” x 8” x 9” (254mm x 203mm x 229mm)
Nominal Voltage	12.8V
Nominal Capacity	100Ah
Standard Charge Voltage	14.6V
Standard Charge Current	10A
Max. Charge Current	20A
Discharge Cut-off Voltage	10V
Cycle Life	≥2000cycles | Retention: ≥80%

Environmental*	
Operating temperature	Charge Temperature: 0°C - +65°C Discharge Temperature: -20°C - +65°C Storage Temperature: 0°C - +25°C

Apendix D: Sensors and Accessories

Sensor PN[1]	Application	Accessory PN[1]	Description	Notes	Cable lengths	Sensor connection
D-LF	Drinking water	FC-01	Side stream flow cell kit low flange	Side stream	5' (up to 75')	M12-4
W-LF	Wastewater					
D-MF	Drinking water	PT-01	Direct in pipe: 2" PCV socket tee with sensor mount adapter, medium flange	Direct in pipe	5' (up to 75')	M12-4
W-MF	Wastewater					
D-MF	Drinking water	MA-2	Direct in pipe: 2" Threaded sensor mount adapter, medium flange	Use with metal pipe	5' (up to 75')	M12-4
W-MF	Wastewater					
D-NF	Drinking water	WT-01	Wet tap with remover assembly and isolation chamber	Use with corp stop valve and saddle, appropriates for size and material	5' (up to 75')	M12-4
D-LF	Drinking water	IM-01	Immersion sensor with 1" 45° adapter or 1" pipe boom mount	Pipe and boom mount (not included)	5' (up to 75')	M12-4
W-LF	Wastewater					

Copyright © 2023-2024 Halogen Systems, Inc. All rights reserved worldwide.

Revision History

Revision	Release Date – MM/DD/YYY	Change Notes
R1.001	08/01/2025	Initial Release
R1.002	08/27/2025	Added: Battery-Operated Chlorine Calibration Instructions Added: Battery-Operated Specific Graphics
R1.003	09/05/2025	Addition to Appendix C: Overall Battery Dimensions

Limited Warranty

Halogen Systems warrants its products to the original purchaser against any defects that are due to faulty material or workmanship for a period of one year from date of shipment unless otherwise noted in the product manual.

In the event that a defect is discovered during the warranty period, Halogen Systems agrees that, at its discretion, it will repair or replace the defective product or refund the purchase price excluding original shipping and handling charges. Any product repaired or replaced under this warranty will be warranted only for the remainder of the original product warranty period.

This warranty does not apply to consumable products such as chemical reagents; or consumable components of a product, such as, but not limited to, lamps and tubing.

Contact Halogen Systems or your distributor to initiate warranty support. Products may not be returned without authorization from Halogen Systems.

Limitations

This warranty does not cover:

- Damage caused by acts of God, natural disasters, labor unrest, acts of war (declared or undeclared), terrorism, civil strife, or acts of any governmental jurisdiction
- Damage caused by misuse, neglect, accident, or improper application or installation
- Damage caused by any repair or attempted repair not authorized by the Halogen Systems
- Any product not used in accordance with the instructions furnished by the Halogen Systems
- Freight charges to return merchandise to the Halogen Systems
- Freight charges on expedited or express shipment of warranted parts or products
- Travel fees associated with on-site warranty repair

This warranty contains the sole express warranty made by Halogen Systems in connection with its products. All implied warranties, including, without limitation, the warranties of merchantability and fitness for a particular purpose, are expressly disclaimed.

Some states within the United States do not allow the disclaimer of implied warranties, and if this is true in your state, the above limitation may not apply to you. This warranty gives you specific rights, and you may also have other rights that vary from state to state.

This warranty constitutes the final, complete, and exclusive statement of warranty terms, and no person is authorized to make any other warranties or representations on behalf of Halogen Systems.

Limitation of Remedies

The remedies of repair, replacement, or refund of the purchase price as stated above, are the exclusive remedies for the breach of this warranty. On the basis of strict liability or under any other legal theory, in no event shall Halogen Systems be liable for any incidental or consequential damages of any kind for breach of warranty or negligence.

Subject to all terms and conditions www.halogensys.com/information.

Copyright © 2023-2024 Halogen Systems, Inc. All rights reserved worldwide.

Index

24AWG cabling, 7
4-20mA wiring, 7
advanced features, 12
checklist, 14
Chlorine level, 10
colorimeter, 2
commissioning, 2
commissioning step, 2
compliance and certification, i
connect to PLC, 11
Bluetooth SmartBox
  connectors, 6
  installation, 5
  mounting to a pole, 6
  mounting to a wall, 5
  opening the cover, 7
  specification, 16
  start-up, 10
display options, 18
flow cell
  installation, 9
  orientation, 9
flow sensor interlock, 13
Gems™ Sensors, 13
Halogen side stream sensor, 8
inspection step, 11
installation of the display/Bluetooth SmartBox step, 2
installation step, 5
John Guest push-to-connect *(PTC) fittings*, 8
limited warranty (Halogen Systems), 19
loop powered, 7
mounting, 5
MP-TOTAL
  installation, 12
  specification, 17
planning step, 2, 3
potable water line, 8
power, 3
precautionary labels, i
safety information, i
sensor connections, 12
sensors and accessories, 18
services at site, 3
technical specification
  Bluetooth SmartBox display/Bluetooth SmartBox, 16
technical support, ii
time of day, setting, 10
trademarks and copyrights, i
troubleshooting and FAQ, 15
warranty, 19
what you'll need, 4
what's included, 4

Copyright © 2023-2024 Halogen Systems, Inc. All rights reserved worldwide.