DUAL PRESSURE & TEMPERATURE AMMONIA GAUGE



As Shown: Model BR701
Back Flange Shown Optional

MODEL BR700

FEATURES:

The Model BR700 Series from Blue Ribbon Corporation is a Dual Pressure and Temperature gauge, designed specifically for ammonia-based closed refrigeration systems.

SPECIFICATIONS:

- Dial Sizes: 2.5" and 4"
- 304 Stainless Steel Case and Ring
- Polycarbonate Lens
- 316 Stainless Steel Tube and Socket
- Bottom and Back ¼" NPT Connection
- Movement: 304 Stainless Steel
- Pointer: Aluminum
  701-702 - Adjustable
  751-752 - Fixed
- Ambient Process Temperature:
  Dry: -40 °F to +150 °F
  Liquid Filled: -4 °F to +150 °F
- Accuracy:
  2.5" Dial: 1.6% FS, (ASME B40.1, Grade A)
  4" Dial: 1% FS, (ASME B40.1, Grade 1A)
- Enclosure Rating: IP65

ORDERING GUIDE:

BAYONET BEZEL (Removeable)

BOTTOM MOUNT		
Pressure Range	**2.5" Dial**	**4" Dial**
30" 0-150 PSI	BR701D-254CF	BR701D-404CF
30" 0-300 PSI	BR701D-254CH	BR701D-404CH
BACK MOUNT		
Pressure Range	**2.5" Dial**	**4" Dial**
30" 0-150 PSI	BR702D-254CF	BR702D-404CF
30" 0-300 PSI	BR702D-254CH	BR702D-404CH

CRIMPED BEZEL (Non-Removeable)

BOTTOM MOUNT		
Pressure Range	**2.5" Dial**	**4" Dial**
30" 0-150 PSI	BR751D-254CF	BR751D-404CF
30" 0-300 PSI	BR751D-254CH	BR751D-404CH
BACK MOUNT		
Pressure Range	**2.5" Dial**	**4" Dial**
30" 0-150 PSI	BR752D-254CF	BR752D-404CF
30" 0-300 PSI	BR752D-254CH	BR752D-404CH

© 2015 Blue Ribbon Corp. **Adaptive Industrial Solutions**
sales@adaptiveind.com | (877) 818-5009

DUAL PRESSURE & TEMPERATURE AMMONIA GAUGE

DIMENSIONAL DRAWING

All dimensions are in inches (mm)

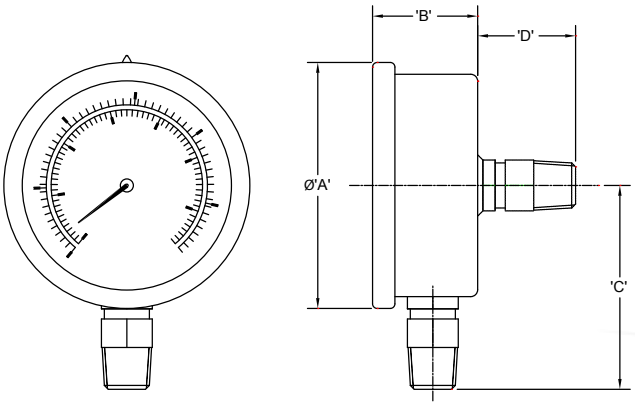

BR700
DUAL TEMP/PRESSURE
AMMONIA GAUGE

DIAL SIZE	'A'	'B'	'C'	'D'
Ø2.50	2.675	1.16	1.00	1.22
Ø4.00	4.29	1.4	3.2	1.256

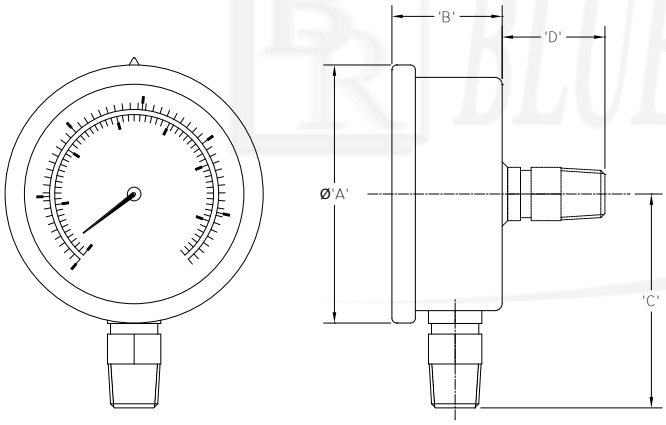

BR751L
SS LIQUID FILLED GAUGE

DIAL SIZE	'A'	'B'	'C'	'D'
Ø1.50	1.85	1.08	1.58	0.74
Ø2.00 (1/8)	2.25	1.155	2.15	0.91
Ø2.00 (1/4)	2.25	1.155	2.165	0.935
Ø2.50	2.675	1.16	2.185	1.22
Ø4.00 (1/4)	4.29	1.4	3.2	1.256
Ø4.00 (1/2)	4.29	1.4	3.24	1.293

All specifications are for reference purposes only. In the interests of continuous product improvement, all specifications are subject to change without notice. Please contact Blue Ribbon Corporation for assistance with your application.

© 2015 Blue Ribbon Corp. **Adaptive Industrial Solutions**
sales@adaptiveind.com | (877) 818-5009