Taylor Valve Technology®

MALLARD CONTROL

A BRAND OF Taylor Valve Technology®

5602
Air/Gas Regulator

The 5602 is a spring-operated regulator used to supply air or gas to pilots, positioners or to pneumatic controls.

FEATURES:

- **Inlet relief**
- **Dual outlet**
- **Built-in micron filter**

SPECIFICATIONS:

Connection: 1/4"NPT

Temperature Range: -20°F to 180°F (-29°C to 82°C)

Inlet Pressure Rating: 250psi

Outlet Pressure Range:

5602-1 (0-30psi) | 5602-2 (0-60psi) | 5602-3 (0-120psi)

Minimum Set Pressure:

5602-1 (5psi) 5602-2 (12psi) 5602-3 (18psi)

Body and Housing Material: Die Cast Aluminum

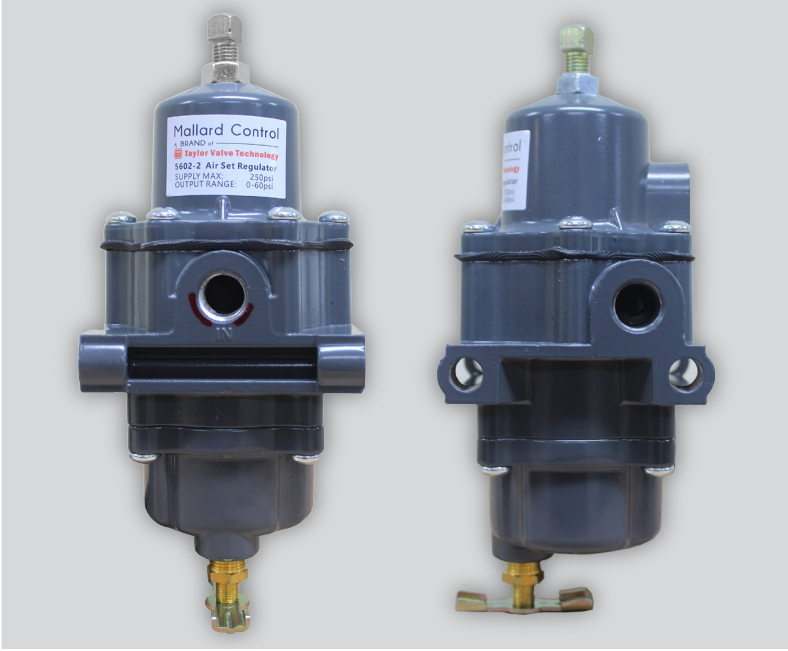

Capacities in SCFH OF 0.6 SG Natural Gas

Inlet Pressure (psi)	Outlet Pressure Setting (Spring Range)		
	25psi (0-30)	40psi (0-60)	80psi (0-120)
50	510	190	---
75	710	640	---
100	960	640	510
150	1290	900	840
250	1800	1900	1300

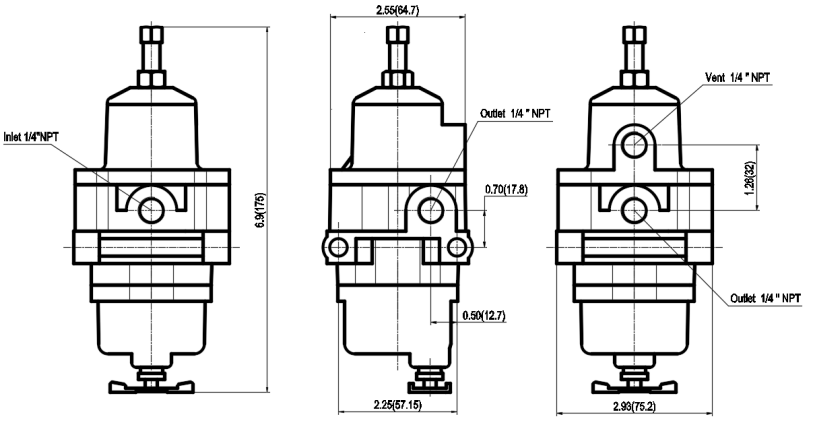

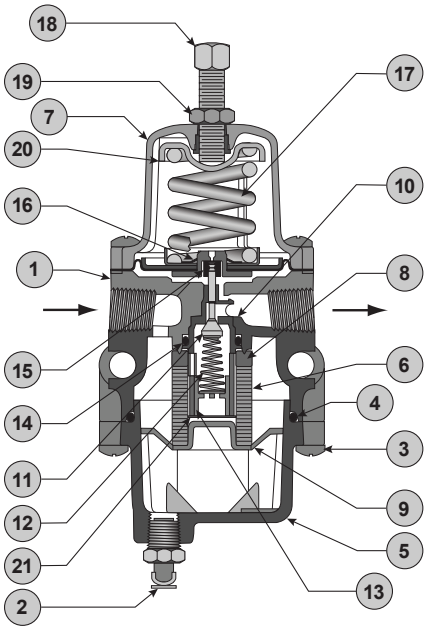

Parts List, Filtered Unit

Item	Description	Qty.
1	BODY	1
2	DRAIN VALVE	1
3	SCREW	10
4	O-RING	1
5	DRIPWELL	1
6	FILTER ELEMENT	1
7	SPRING CASE	1
8	FILTER GASKET	1
9	FILTER RETAINER	1
10	VALVE CARTRIDGE	1
11	VALVE PLUG	1
12	VALVE SPRING	1
13	VALVE RETAINER	1
14	O-RING	1
15	SOFT SEAT	1
16	DIAPHRAGM ASSY.	1
17	SPRING, 0-30#	1
	SPRING, 0-60#	1
	SPRING, 0-120#	1
18	ADJUSTING SCREW	1
19	LOCK NUT	1
20	UPPER SPRING SEAT	1
21	WASHER	1
22*	WASHER	2
23*	PIPE PLUG	1

* Not Shown

NOTE: Taylor Valve reserves the right to change product designs and specifications without notice.

Taylor Valve Technology
Adaptive Industrial Solutions
sales@adaptiveind.com
(877) 818-5009

6/24/24