SERIAL / DIGITAL INTERFACE SUBMERSIBLE LEVEL TRANSMITTER



Model BR913
Serial/Digital Interface (SDI-12)
Submersible Level Transmitter

MODEL BR913

PRODUCT OVERVIEW:

Model BR913 from Blue Ribbon Corp is a high-accuracy submersible level transmitter. It features an asynchronous serial communication output (SDI12-v 1.3), typically used to monitor environmental data. This also allows for communication with compatible data loggers or data acquisition systems. The incorporation of a hydrophobic breather vent ensures extended trouble-free service within demanding applications. These features, combined with the low power requirements of the Model 913, make it particularly ideal for remote well monitoring applications.

FEATURES:

- SDI-12 Interface
- 0-30" WC to 0-700 FTWC (762 mm to 213.4 meters WC)
- Welded, leak-proof, 316L stainless steel construction
- Optional 0.685" (1.7 cm) diameter
- Up to ±0.05% FSO accuracy
- Optional Tefzel® jacketed cable

APPLICATIONS:

- Remote well monitoring (wet wells, ponds, rivers)
- Ground water monitoring
- Tank level measurements
- Water treatment
- Irrigation Systems

FIELD OPTIONS:

- Available in 0.875 or 0.685" (2.2 or 1.7 cm) diameter
- Hytrel or Tefzel® jacketed cable
- Titanium construction
- Temperature output

BR5SL-TX-006
REV-B

© 2016 Blue Ribbon Corp. **Adaptive Industrial Solutions**
sales@adaptiveind.com | (877) 818-5009

SERIAL/DIGITAL INTERFACE SUBMERSIBLE LEVEL TRANSMITTER

DIMENSIONAL DRAWING

All dimensions are in inches (mm)

STANDARD WIRING

WIRE	MODEL 913
RED	+EXC
BLK	-EXC
GRN	SDI-12 DATA
WHT	N/C
SHIELD	OPEN

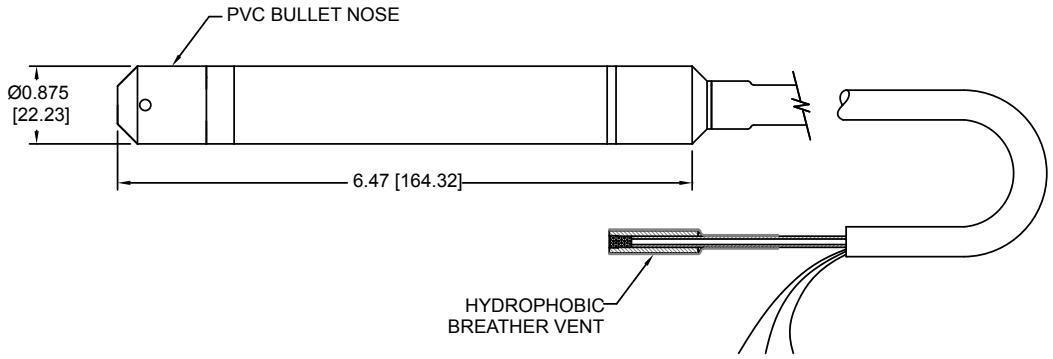

REFERENCE SPECIFICATIONS

ELECTRICAL

- **Output Signal:** SDI-12- standard version 1.3
- **Supply Voltage:** 6.0 to 36 Vdc
- **Circuit Protection:** Short circuit or reversed wired – Indefinite Input protection and EMC filtering
- **Response Time:** 1 sec.
- **Connection:** Hytrel jacketed, 4 conductor, 18 AWG with vent tube and hydrophobic filter, 8' long, optional lengths available

MATERIALS OF CONSTRUCTION

- **Wetted Parts:** 316L, Hytrel, PVC
- **Housing:** 316L SST (Optional Titanium)
- **Pressure Cavity:** 316L stainless steel (Optional Titanium)
- **Internal Fill:** Fomblin Oil

STATIC ACCURACY (BFSL): NON-LINEARITY @ +70 °F

- **Standard:** ±0.5% FSO
- **Improved:** ±0.20% FSO, ±0.1% FSO, ±0.05% FSO
- **Zero Balance and FSO:** ±1.0% FS

MECHANICAL

- **Process connection:** PVC bullet nose
- **External Pressure:** Case rated to 900 FTWC (275 Meters WC)
- **Proof Pressure:** 2X FSO
- **Burst Pressure:** 3X FSO
- **Weight:** <10 oz, 284 g
- **Diameter:** 0.875" (2.2 cm) standard; 0.685" (1.7 cm) optional

PRESSURE RANGES

- 0-30" WC to 0-700 feet WC (762 mm to 213.4 meters WC)

THERMAL SPECIFICATIONS

- **Compensated:** 0 °F to +140 °F (-7 °C to +60 °C)
- **Operating Temperature:** -40 °F to +185 °F (-40 °C to +85 °C)
- **Storage Ambient:** -40 °F to +195 °F (-40 °C to +90.6 °C)
- **Effect on Zero/Span:** <±2.0% FSO/100 °F
- **Temperature Resolution:** ±0.1 °C

All specifications are for reference purposes only. In the interests of continuous product improvement, all specifications are subject to change without notice. Please contact Blue Ribbon Corporation for assistance with your application.

© 2016 Blue Ribbon Corp.
Adaptive Industrial Solutions
sales@adaptiveind.com | (877) 818-5009