CLAMP-ON THERMOMETER



Model BRCT
Clamp-On Thermometer

MODEL BRCT

FEATURES:

- Clamp-on design with steel spring
- Dual Scale (°F & °C)
- Easy to install
- Fits pipe sizes to 4" (100mm)

SPECIFICATIONS:

- **Dial:** 2.5" (63mm) aluminum with black markings
- **Case:** Steel
- **Lens:** Plexiglass
- **Ring:** Steel, chrome plated
- **Sensing Element:** Bi-metallic coil
- **Pointer:** Aluminum, painted black
- **Over-Range Enclosure Rating:** 25% of Full-scale value
- **Temperature Range:** 32 °F to 250 °F (0 °C to 121 °C)
- **Ambient/Process Temperature:** -40 °F to 390 °F (-40 °C to 200 °C)
- **Accuracy:** ±3% of Full-scale
- **Enclosure Rating:** IP52

APPLICATIONS:

- To measure surface temperature on pipe.

Range	Code
32 °F to 250 °F (0 °C to 121 °C)	BRCT

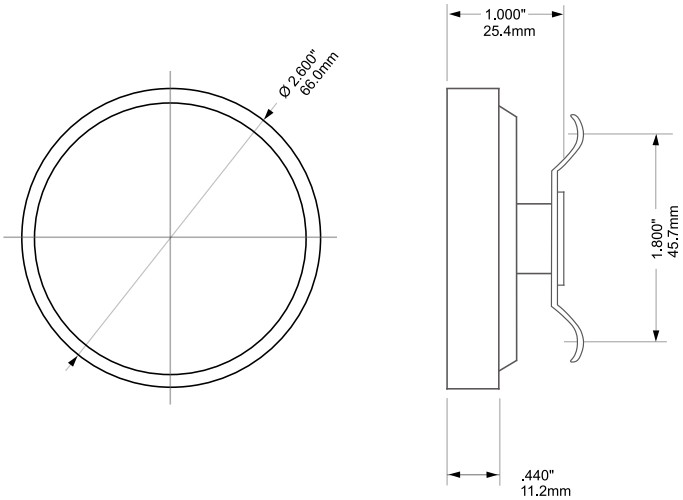

BR5SL-T-008
REV-C

© 2016 Blue Ribbon Corp.

Adaptive Industrial Solutions
sales@adaptiveind.com | (877) 818-5009