INDUSTRIAL THERMOMETER 9" SCALE ADJUSTABLE ANGLE TYPE

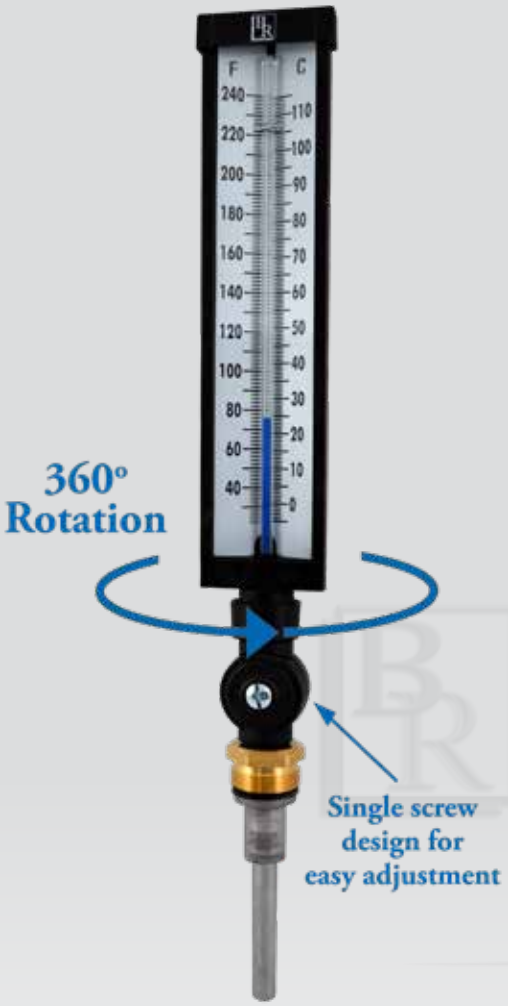

Model BR9A35
(Thermowell sold separately,
See Model BR9TW)

MODEL BR9A

FEATURES:

- Single screw design for easy adjustment and full 360° rotation
- Available in 3.5" and 6" stem lengths
- Blue spirit filled thermometer set inside V-shaped aluminum scale with high-contrast black on white numeric scale for easy reading
- NIST traceable calibration with guaranteed accuracy to ±1 scale division
- Black enameled die cast aluminum construction with glass front minimizing dirt and dust build up for ranges up to 400 °F (200 °C)
- Optional plastic face
- 1¼–18 UNEF swivel nut connection assembly with tapered bulb chamber for proper well seating
- Available in Straight Form and 90° Back Angle

SPECIFICATIONS:

- Dial: 9" (230mm) aluminum
- Lens: Glass
- Connection: 1¼–18 UNEF swivel nut
  3.5" or 6" stem length (see ordering guide)
- Scale: Aluminum painted white with black markings
- Bulb Chamber: Tapered cast aluminum with graphite fill
- Tube, Sensing Liquid: Glass, spirit organic fluid
- Adjustment: Fully adjustable
- Accuracy: ±1%
- Enclosure Rating: IP54

© 2015 Blue Ribbon Corp. **Adaptive Industrial Solutions**
sales@adaptiveind.com | (877) 818-5009

INDUSTRIAL THERMOMETER 9" SCALE ADJUSTABLE ANGLE TYPE

DIMENSIONAL DRAWING

All dimensions are in inches (mm)

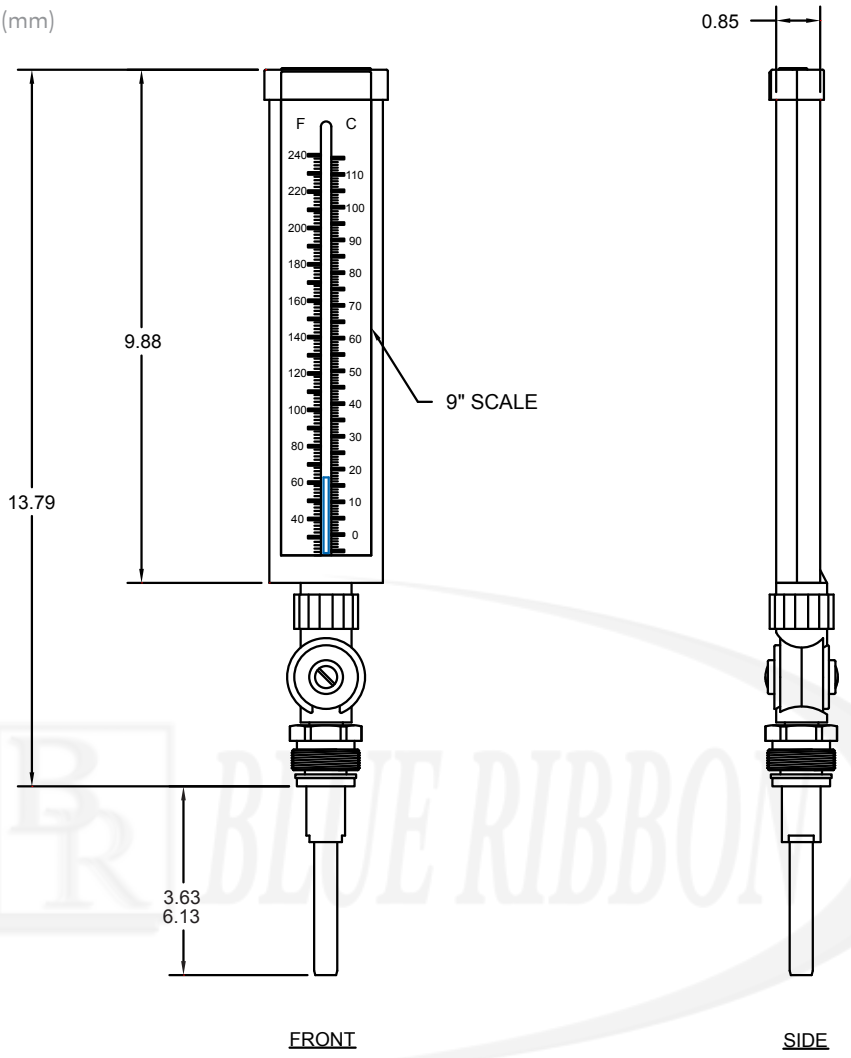

ORDERING GUIDE

Example: BR9A35-240

MODEL	STEM LENGTH	TEMP RANGE
BR9A	35 = 3.5″	110 = -40-110 °F/C
	6 = 6″	120 = 0-120 °F/C
		160 = 30-160 °F/C
		180 = 30-180 °F/C
		240 = 30-240 °F/C
		300 = 30-300 °F/C

All specifications are for reference purposes only. In the interests of continuous product improvement, all specifications are subject to change without notice. Please contact Blue Ribbon Corporation for assistance with your application.

© 2015 Blue Ribbon Corp.
Adaptive Industrial Solutions
sales@adaptiveind.com | (877) 818-5009