Thermowells

Standard and Custom-Drilled Bar-Stock Designs

Speed, Service, Solutions...
Beyond Measure®

THERMOWELLS



pyromation® inc.
beyond measure

Thermowells

Standard and Custom-Drilled Bar-Stock Designs

Speed, Service, Solutions...
Beyond Measure®

pyromation® inc.
beyond measure

pyromation inc.
beyond measure

Page

Table of Contents 1
Introduction . . . . . 2 & 3
Thermowell Design and Selection Criteria 4
Thermowell Materials 5
Standard-Duty, Threaded Thermowells . . . . . 6 & 7
Heavy-Duty, Threaded Thermowells . . . . . 8 & 9
Straight-Shank, Threaded Thermowells . . . . . 10 & 11
Limited-Space Thermowells . . . . . 12 & 13
Straight-Shank, Socket-Weld Thermowells . . . . . 14 & 15
Heavy-Duty, Socket-Weld Thermowells . . . . . 16 & 17
Reduced-Tip, Socket-Weld Thermowells . . . . . 18 & 19
Weld-In Thermowells . . . . . 20 & 21
Sanitary, Weld-In Thermowells . . . . . 22 & 23
Standard, Flanged Thermowells . . . . . 24 & 25
Heavy-Duty, Flanged Thermowells . . . . . 26 & 27
Reduced-Tip, Flanged Thermowells . . . . . 28 & 29
Heavy-Duty, Van Stone Thermowells . . . . . 30 & 31
Straight Van Stone Thermowells . . . . . 32 & 33
Reduced-Tip Van Stone Thermowells . . . . . 34 & 35
Sanitary-Connected Thermowells . . . . . 36 & 37
W81 Series Sanitary, Weld-In Thermowells . . . . . 38 & 39
Thermowell Options and Specifications 40
ANSI Flanged Thermowell Data Sheet 41
Maximum Allowable Working Pressure Tables . . . . . 42 & 43
Corrosive Service Guide . . . . . 44 & 45
Thermowell Design Evaluator 46
Sample Thermowell Design Evaluator Report 47

Introduction

When Temperature Is Critical, Think Pyromation

U.S. manufactured temperature sensors, thermowells, components, complete assemblies and support services - all under one roof.

Pyromation began operations in 1962 and is one of the leading producers of temperature sensors in the world. With applications in almost every industry and sales in over 45 countries, Pyromation has become an international business while maintaining close relationships with its customers.

As a vertically integrated manufacturer that produces thermowells and connection heads in addition to temperature sensors, we can quickly respond to your complete sensor needs while maintaining competitive costs and quality control. We have an onsite NVLAP-accredited Metrology Laboratory performing calibrations and Non-Destructive Testing (NDT) capabilities on location. These and other in-house operations allow us to deliver most orders within four business days, with same-day, 24-hour or 72-hour express shipments available on request.

Our experienced sales team is accessible, personable and ready to work with you on your specific applications. Try our online configurator at www.pyromation.com, or talk with a member of our sales team regarding custom designs. These are some of the sensor assemblies we make:

- Industrial Thermocouple Elements, Protection Tubes and Assemblies
- Waste Incineration Thermocouples
- Magnesium Oxide Insulated (MgO) Thermocouples
- Temperature Sensors for the Plastics, Rubber and Packaging Industries
- General Purpose RTDs
- CIP Sanitary-Connected, high-accuracy RTDs for Food, Dairy and Pharmaceutical applications
- Programmable Temperature Transmitters
- Insertion Probes
- Heat Tracing Sensors
- Tube Skin Thermocouples
- Aggregate Thermocouples
- Cerite® Assemblies
- Threaded, Socket-Weld, Weld-In, Flanged, Van Stone, and Sanitary Thermowells
- Connection Heads – including explosion proof types
- Temperature Sensor Accessories
- Complete Assemblies
- Custom Designs
- And much more

The combination of personalized service, quick delivery and a broad line of superior quality temperature sensing products provide the best solutions for all of your temperature measurement applications. In essence, Pyromation delivers speed, service, solutions…beyond measure®.

The Right Thermowell for Your Application

Can you risk using thermowells produced overseas or not specifically designed to last in your application? We design and produce superior quality thermowells right here in our Fort Wayne, Indiana plant, which means you get custom designs, technical support, precision machining, incredible strength and durability, a professional finish and the fastest turnaround time in the industry. Combined with our competitive pricing, application expertise and technical support, you won't find a better source for thermowell components or complete temperature sensor assemblies.

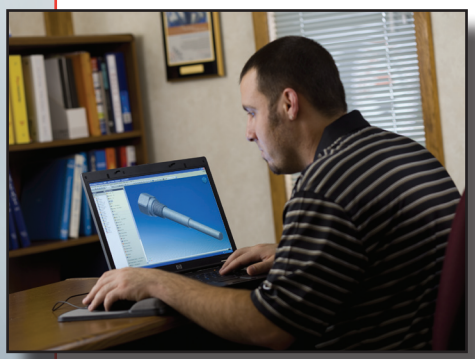

As a comprehensive manufacturer of temperature measurement assemblies and components, Pyromation offers a wide variety of drilled bar stock and flanged thermowells to protect temperature sensing instruments from the corrosive elements, high pressure and high velocities that can be present in many industrial process applications.

We're here to answer your questions. Our sales people average nearly 25 years of experience and have application expertise in almost every industry. They'll help you find the right thermowell for your specific application. If the thermowell you need is not shown in our catalog, Pyromation's sales and engineering staff will custom design the best thermowell to meet your needs while maintaining a competitive price.



Our drilled barstock thermowells are machined from NACE compliant materials, including 304 and 316 stainless steel, Hastelloy® C276, carbon steel, chrome molybdenum and others. After production, we polish our thermowells to a minimum surface finish of 32 µin R_a and mark them to ensure material traceability.

Both barstock and flanged thermowells are available in several different physical configurations, a variety of materials, choice of bore sizes, and various process connection types including threaded, socket-weld, weld-in, and flanged. Thermowells are available as separate components or as a part of complete temperature sensor assemblies.

Pyromation's thermowells have a proven track record in a wide range of applications and industries including:

- Food and Beverage
- Oil and Gas
- Pharmaceutical
- Chemical
- Dairy
- Pulp and Paper
- Wastewater
- Power Generation
- Petro-chemical



Certified, Approved, Registered, Accredited and Compliant

You can rely on Pyromation because we've done the background work and received the certifications to provide you with thermowells that meet the codes and standards required for your application.

Pyromation's thermowell design and inspection techniques are compliant with ASME B31.3 standard for process piping applications. The maximum allowable working pressure calculations have been verified by a third party ISO 9001:2000 certified Professional Engineer (PE). Standard thermowell designs comply with ASME PTC 19.3 and wake frequency calculations are available upon request, or you can submit your process calculations online via our Thermowell Design Evaluator at www.pyromation.com. Our flanged thermowells are manufactured from ASME B16.5 flanges and fabricated with ASME certified welders and welding processes.

Pyromation's products are UL, CSA and FM approved, including specific thermowell assemblies rated for hazardous locations. A Canadian Registration Number (CRN) is available on most designs. We also produce thermowells that meet 3A requirements for sanitary applications.

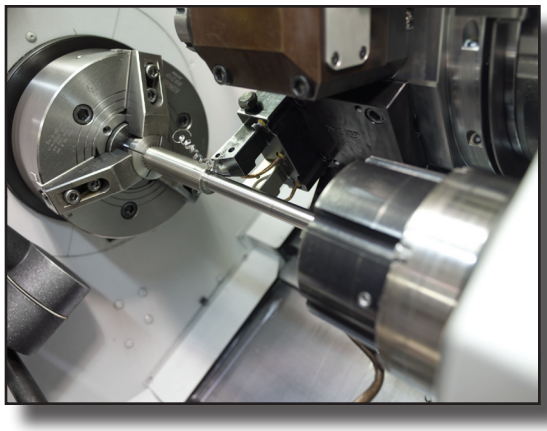

Non-Destructive Testing (NDT) and accompanying documentation is available upon request for any thermowell order.

Besides meeting rigorous industry standards, our thermowells are produced in Pyromation's ISO 9001 registered facility, ensuring consistency and the highest quality in everything we make.

These are just a few of the reasons the Pyromation thermowell product line is known to deliver Quality in Every Degree®.

Hastelloy® is a registered trademark of Haynes International

Thermowell Design and Selection Criteria

A thermowell is a pressure-tight receptacle that protects and extends the life of a temperature sensor in processing applications where the sensor is not mechanically or chemically compatible with the process environment. Installed directly into piping, vats or other parts of process systems, thermowells facilitate sensor replacement in high pressure pipelines and eliminate the need to interrupt the process flow or drain of the process system for sensor maintenance functions. The use of standardized thermowells permits simple relocation of sensors throughout a plant.

Strength versus accurate and fast temperature measurement is a balancing act. The factors which tend to produce high strength also tend to reduce the temperature sensor's accuracy and speed of response. A properly selected thermowell will balance these opposing factors to produce a design capable of functioning satisfactorily in the intended application. The listed factors are a general guide and are not all-inclusive. Refer to ASME Performance Test Code 19.3 for a more authoritative dissertation on proper thermowell selection.

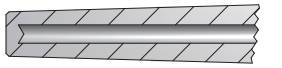

TAPERED STEM:
-BALANCE BETWEEN STRENGTH AND ACCURACY
-HEAVY DUTY APPLICATIONS
-HIGH RIGIDITY



STEPPED STEM:
-FASTER RESPONSE
-REDUCED STEM LOSS
-GOOD RIGIDIGY

STRAIGHT STEM:
-STANDARD CONSTRUCTION
-GOOD RIGIDITY

MATERIAL
SELECTION MUST PROVIDE:
-PROCESS TEMPERATURE RESISTANCE
-PROCESS FLUID CORROSION AND EROSION RESISTANCE
-MECHANICAL STRENGTH

WALL THICKNESS	
THIN	THICK
(BEST MEASUREMENT)	(BEST STRENGTH)
-REDUCES RESPONSE TIME -REDUCES STEM CONDUCTION LOSS	-HIGH STATIC PRESSURE -HIGH RIGIDITY & NATURAL FREQUENCY -INCREASED RESISTANCE TO BENDING & VIBRATIONAL STRESS -INCREASED CORROSION & EROSION LIFE

STEM GEOMETRY

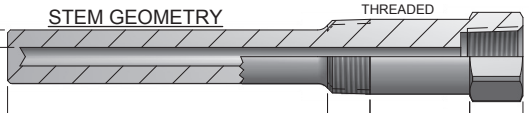

HEX OR WRENCH FLATS

IMMERSION LENGTH	
LONGER	SHORTER
(BEST MEASUREMENT)	(BEST STRENGTH)
-PLACES ACTIVE PORTION OF SENSOR DEEPER INTO PROCESS STREAM -REDUCES STEM CONDUCTION	-INCREASES RIGIDITY & NATURAL FREQUENCY - INCREASES RESISTANCES TO BENDING & VIBRATIONAL STRESS

PROCESS CONNECTION
-MUST MATCH MATING CONNECTION
-MAINTAIN PRESSURE-TIGHT RIGID CONNECTION
-MEET ANY APPLICABLE CODES

LAG EXTENSION
(OPTIONAL)
- MOVES SENSOR CONNECTION PAST INSULATING WALL IF REQUIRED

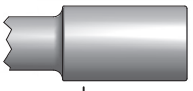

WELDED

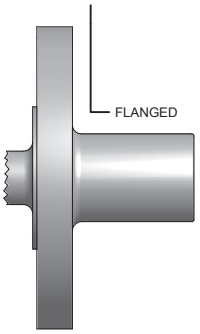

FLANGED

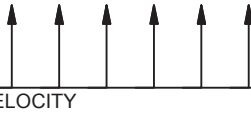

PROCESS FLUID VELOCITY	
FASTER (BEST MEASUREMENT)	SLOWER (BEST STRENGTH)
-INCREASES HEAT TRANSFER -REDUCES RESPONSE TIME	-REDUCES BENDING STRESS -REDUCES VIBRATIONAL FORCING FREQUENCY

Thermowell Materials

Code	Description	UNS Number	Trade Names	Code	Description	UNS Number	Trade Names
03	Alloy 600	N06600	Inconel®	35	321 SS	S32100	
04	310 SS	S31000		36	347 SS	S34700	
05	446 SS	S44600		37	Alloy 800	N08800	Incoloy®
06	C1018	G10180		38	Alloy 20	N08020	Carpenter®
07	Alloy 601	N06601	Inconel®	41	HR-160	N12160	Haynes®
08	316 SS/316 L	S31603		50	Zirconium	R60702	
09	304 SS/304 L	S30403		51	Alloy X		Hastelloy®
22	Brass			56	Teflon®		Teflon®
27	Alloy 400	N04400	Monel®	59	F22	K21590	
28	Alloy B-3	N10675	Hastelloy®	60	F11	K11572	
29	Alloy C-276	N10276	Hastelloy®	61	A105	K03504	
31	Nickel 200	N02200		91	F91	K91560	

*Consult factory for other materials.



Incoloy®, Monel®, and Inconel® are registered trademarks of Special Metals Corporation group of companies.
Haynes® and Hastelloy® are registered trademarks of Haynes International, Inc.
Carpenter® is a registered trademark of SPS Technologies.
Teflon® is a registered trademark of E.I. du Pont de Nemours and Company

Standard-Duty, Threaded Thermowells



Standard-Duty



Standard-Duty with Lag

Standard-Duty, Threaded Thermowells are available in a variety of materials, process connection sizes, lengths, and optional lagging extensions. Thermowell specifications should be determined based on process conditions, which include strength, temperature, pressure and corrosion resistance requirements. The stepped construction is used in standard duty applications and increases the speed of response while maintaining mechanical strength. They are designed with standard 0.260” bore diameters to accommodate sensing elements with a 0.252” maximum diameter. These wells are available as separate components or as part of complete sensor assemblies.

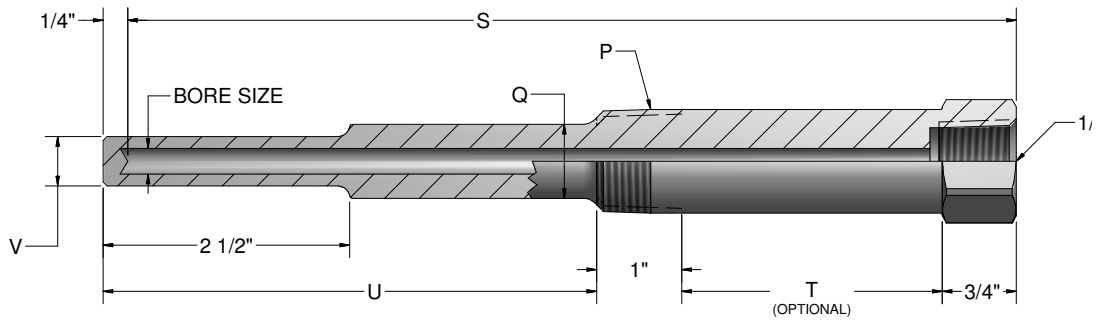

+ = Wells are made from round bar with milled wrench hex. 1 1/4" NPT and 1 1/2" NPT wells are supplied as round bar with milled wrench flats.

("U" length for non-lagging wells) = "S" -1 1/2"
("U" length for lagging wells) = "S" - 1 1/2" - "T"
(To solve for "T"), "T" = "S" - "U" -1 1/2" (When "U" and "S" are specified)

[1] For wells with 1/2" NPT; 1" process thread length and 3/4" hex length dimensions above are reversed.

Thermowell Dimensions

"P"	"Q"	"V"
1/2" NPT[1]	5/8" Dia.	1/2" Dia.
3/4" NPT	3/4" Dia.	1/2" Dia.
1" NPT	7/8" Dia.	1/2" Dia.
1 1/4" NPT	1 1/4" Dia.	7/8" Dia.
1 1/2" NPT	1 1/2" Dia.	7/8" Dia.

ORDER CODES

Example Order Number:

1-0	1-1	1-2	1-3	1-4	1-5	1-6
S	4	D	06	08	T2	C8S

1-0 Well Type

CODE	DESCRIPTION
S	Standard-duty threaded

1-1 Bore Size

CODE	DESCRIPTION
4	0.260" Dia. bore

1-2 Pipe Size "P"

CODE	DESCRIPTION
C	1/2" NPT
D	3/4" NPT
E	1" NPT
F	1 1/4" NPT
G	1 1/2" NPT

1-3 "S" Length

CODE	DESCRIPTION
XX	Specify length in inches using two digits plus fractional length

1-4 Material

CODE	DESCRIPTION
XX	Specify two digit material code as stated in the Thermowell Material Table located near the front of this catalog

1-5 Optional "T" Lag Dimension

CODE	DESCRIPTION
Leave blank if no lag is required	
T__	Specify "T" dimension in inches

1-6 Options

CODE	DESCRIPTION
C8	316 stainless steel well cap and chain
C22	Brass well cap and chain
S	Well stamped with customer specified part number

Heavy-Duty, Threaded Thermowells



Heavy-Duty



Heavy-Duty with Lag

Heavy-Duty, Threaded Thermowells are available in a variety of materials, process connection sizes, lengths and optional lagging extensions. Thermowell specifications should be determined based on process conditions which include strength, temperature, pressure and corrosion resistance requirements. They are designed with a standard 0.260” or 0.385” bore diameter to accommodate sensing elements with a 0.252” or 0.377” maximum diameter respectively. The tapered design is suited for heavy duty applications where greater rigidity is required for increased pressure and flow process conditions. These wells are available as separate components or as part of complete sensor assemblies.

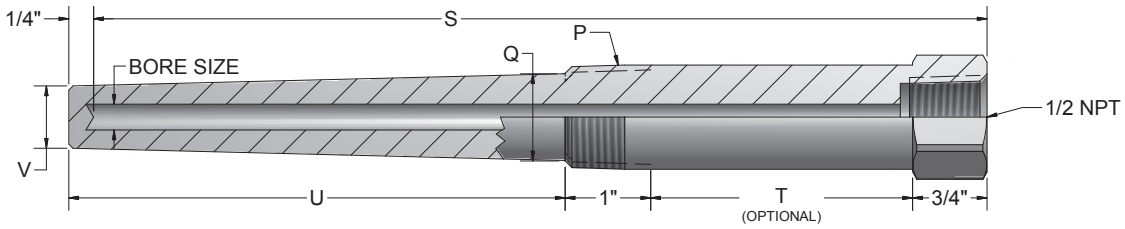

+ = Wells are made from round bar with milled wrench hex. 1 1/4" NPT and 1 1/2" NPT wells are supplied as round bar with milled wrench flats.

("U" length for non-lagging wells) = "S" -1 1/2"
("U" length for lagging wells) = "S" -1 1/2" - "T"
(To solve for "T"), "T" = "S" - "U" -1 1/2" (When "U" and "S" are specified)
Maximum tapered length is 16"

Thermowell Dimensions

"P"	"Q"	"V" (0.260")	"V" (0.385")
1/2" NPT	11/16" Dia.	5/8" Dia.	N/A
3/4" NPT	7/8" Dia.	5/8" Dia.	49/64" Dia.
1" NPT	1 1/16" Dia.	5/8" Dia.	49/64" Dia.
1 1/4" NPT	1 3/8" Dia.	7/8" Dia.	7/8" Dia.
1 1/2" NPT	1 5/8" Dia.	1" Dia.	1" Dia.

ORDER CODES

Example Order Number:

1-0	1-1	1-2	1-3	1-4	1-5	1-6
H	4	D	06	08	T2	C8S

1-0 Well Type

CODE	DESCRIPTION
H	Heavy-duty threaded

1-1 Bore Size

CODE	DESCRIPTION
4	0.260" Dia. bore
6	0.385" Dia. bore

1-2 Pipe Size "P"

CODE	DESCRIPTION
C	1/2" NPT
D	3/4" NPT
E	1" NPT
F	1 1/4" NPT
G	1 1/2" NPT

1-6 Options

CODE	DESCRIPTION
C8	316 stainless steel well cap and chain
C22	Brass well cap and chain
S	Well stamped with customer specified part number

1-5 Optional "T" Lag Dimension

CODE	DESCRIPTION
Leave blank if no lag is required	
T__	Specify "T" dimension in inches

1-4 Material

CODE	DESCRIPTION
XX	Specify two digit material code as stated in the Thermowell Material Table located near the front of this catalog

1-3 "S" Length

CODE	DESCRIPTION
XX	Specify length in inches using two digits plus fractional length

Straight-Shank, Threaded Thermowells



Straight-Shank



Straight-Shank with Lag

Straight-Shank, Threaded Thermowells are available in a variety of materials, process connection sizes, lengths, and optional lagging extensions. Thermowell specifications should be determined based on process conditions, which include strength, temperature, pressure and corrosion resistance requirements. They are designed with a standard 0.260” or 0.385” bore diameter to accommodate sensing elements with a 0.252” or 0.377” maximum diameter respectively. These wells are available as separate components or as part of complete sensor assemblies.

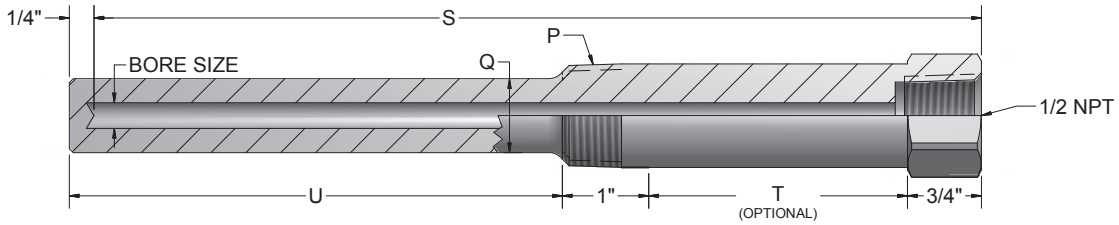

+ = Wells are made from round bar with milled wrench hex. 1 1/4" NPT and 1 1/2" NPT wells are supplied as round bar with milled wrench flats.

("U" length for non-lagging wells) = "S" -1 1/2"
("U" length for lagging wells) = "S" -1 1/2" - "T"
(To solve for "T"), "T" = "S" - "U" -1 1/2" (When "U" and "S" are specified)

Thermowell Dimensions

"P"	"Q"
1/2" NPT	5/8" Dia.
3/4" NPT	3/4" Dia.
1" NPT	7/8" Dia.
1 1/4" NPT	1 1/4" Dia.
1 1/2" NPT	1 1/2" Dia.

ORDER CODES

Example Order Number:

1-0	1-1	1-2	1-3	1-4	1-5	1-6
ST	4	D	09	08	T2	C8S

1-0 Well Type

CODE	DESCRIPTION
ST	Straight-shank threaded

1-1 Bore Size

CODE	DESCRIPTION
4	0.260" Dia. bore
6	0.385" Dia. bore

1-2 Pipe Size "P"

CODE	DESCRIPTION
C	1/2" NPT
D	3/4" NPT
E	1" NPT
F	1 1/4" NPT
G	1 1/2" NPT

1-6 Options

CODE	DESCRIPTION
C8	316 stainless steel well cap and chain
C22	Brass well cap and chain
S	Well stamped with customer specified part number

1-5 Optional "T" Lag Dimension

CODE	DESCRIPTION
Leave blank if no lag is required	
T__	Specify "T" dimension in inches

1-4 Material

CODE	DESCRIPTION
XX	Specify two digit material code as stated in the Thermowell Material Table located near the front of this catalog

1-3 "S" Length

CODE	DESCRIPTION
XX	Specify length in inches using two digits plus fractional length

Limited-Space Thermowells



Limited-Space Thermowells are available in a variety of materials and process connection sizes. Thermowell specifications should be determined based on process conditions, which include strength, temperature, pressure and corrosion resistance requirements. They are intended for use in piping systems where space is limited. They are designed with standard 0.260” bore diameter to accommodate sensing elements with a 0.252” maximum diameter. These wells are available as separate components or as part of complete sensor assemblies.

3/4” and 1” NPT

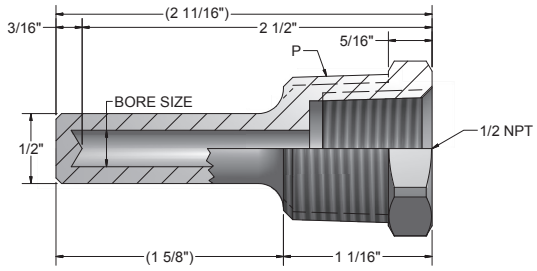

1/2” NPT

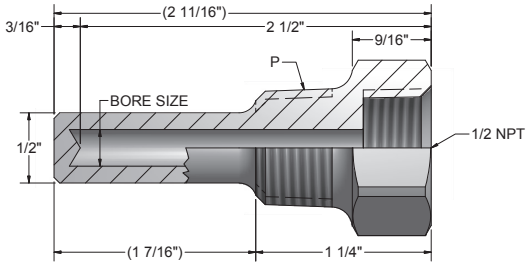

ORDER CODES

Example Order Number:

1-0	1-1	1-2		1-3	1-4
LS	**4**	**D**	**2.5**	**08**	**C8**

1-0 Well Type

CODE	DESCRIPTION
LS	Limited-space threaded

1-1 Bore Size

CODE	DESCRIPTION
4	0.260” Dia. bore

1-2 Pipe Size “P”

CODE	DESCRIPTION
C	1/2” NPT
D	3/4” NPT
E	1” NPT

1-4 Options

CODE	DESCRIPTION
C8	316 stainless steel well cap and chain
C22	Brass well cap and chain
S	Well stamped with customer specified part number

1-3 Material

CODE	DESCRIPTION
XX	Specify two digit material code as stated in the Thermowell Material Table located near the front of this catalog

Straight-Shank, Socket-Weld Thermowells



Straight-Shank, Socket-Weld



Straight-Shank, Socket-Weld with Lag

Straight-Shank, Socket-Weld Thermowells are available in a variety of materials, process connection sizes, lengths, and optional lagging extensions. Thermowell specifications should be determined based on process conditions, which include strength, temperature, pressure and corrosion resistance requirements. The Straight-Shank, Socket-Weld is designed to be used with a 3000 class weld-o-let, which allows the thermowell to be welded permanently into the process. They are designed with a standard 0.260" or 0.385" bore diameter to accommodate sensing elements with a 0.252" or 0.377" maximum diameter respectively. These wells are available as separate components or as part of complete sensor assemblies.

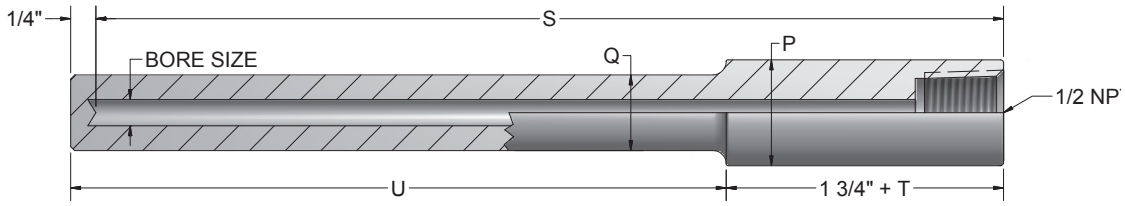

Thermowell Dimensions

"P" PIPE SIZE		"Q"
NOM.	DIA.	
3/4"	1.050"	3/4" Dia.
1"	1.315"	7/8" Dia.
1 1/4"	1.660"	1 1/4" Dia.
1 1/2"	1.900"	1 1/2" Dia.

("U" length for non-lagging wells) = "S" -1 1/2"
("U" length for lagging wells) = "S" -1 1/2" - "T"
(To solve for "T"), "T" = "S" - "U" -1 1/2" (When "U" and "S" are specified)

ORDER CODES

Example Order Number:

1-0	1-1	1-2	1-3	1-4	1-5	1-6
SW	4	D	09	08	T2	C8S

1-0 Well Type

CODE	DESCRIPTION
SW	Straight-shank, socket-weld

1-1 Bore Size

CODE	DESCRIPTION
4	0.260" Dia. bore
6	0.385" Dia. bore

1-2 Pipe Size "P"

CODE	DESCRIPTION
D	3/4" NPS
E	1" NPS
F	1 1/4" NPS
G	1 1/2" NPS

1-6 Options

CODE	DESCRIPTION
C8	316 stainless steel well cap and chain
C22	Brass well cap and chain
S	Well stamped with customer specified part number

1-5 Optional "T" Lag Dimension

CODE	DESCRIPTION
Leave blank if no lag is required	
T__	Specify "T" dimension in inches

1-4 Material

CODE	DESCRIPTION
XX	Specify two digit material code as stated in the Thermowell Material Table located near the front of this catalog

1-3 "S" Length

CODE	DESCRIPTION
XX	Specify length in inches using two digits plus fractional length

Heavy-Duty, Socket-Weld Thermowells



Heavy-Duty, Socket-Weld



Heavy-Duty, Socket-Weld with Lag

Heavy-Duty, Socket-Weld Thermowells are available in a variety of materials, process connection sizes, lengths and optional lagging extensions. Thermowell specifications should be determined based on process conditions, which include strength, temperature, pressure and corrosion resistance requirements. The Heavy-Duty Socket-Weld is designed to be used with a 3000 class weld-o-let, which allows the thermowell to be welded permanently into the process. They are designed with a standard 0.260” or 0.385” bore diameter to accommodate sensing elements with a 0.252” or 0.377 maximum diameter respectively. The tapered design is suited for heavy duty applications where greater rigidity is required due to process conditions. These wells are available as separate components or as part of complete sensor assemblies.

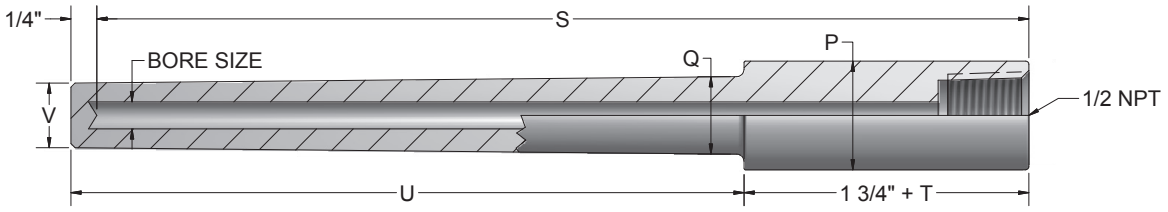

("U" length for non-lagging wells) = "S" -1 1/2"
("U" length for lagging wells) = "S" -1 1/2" - "T"
(To solve for "T"), "T" = "S" - "U" -1 1/2" (When "U" and "S" are specified)

Thermowell Dimensions

"P" PIPE SIZE		"Q"	"V" 0.260	"V" 0.385
NOM.	DIA.			
3/4"	1.050"	3/4" Dia.	5/8" Dia.	5/8" Dia.
1"	1.315"	7/8" Dia.	5/8" Dia.	49/64" Dia.
1 1/4"	1.660"	1 1/4" Dia.	7/8" Dia.	7/8" Dia.
1 1/2"	1.900"	1 1/2" Dia.	7/8" Dia.	7/8" Dia.

ORDER CODES

Example Order Number:

1-0	1-1	1-2	1-3	1-4	1-5	1-6
HW	4	D	09	08	T2	C8S

1-0 Well Type

CODE	DESCRIPTION
HW	Heavy-duty, socket-weld

1-1 Bore Size

CODE	DESCRIPTION
4	0.260" Dia. bore
6	0.385" Dia. bore

1-2 Pipe Size "P"

CODE	DESCRIPTION
D	3/4" NPS
E	1" NPS
F	1 1/4" NPS
G	1 1/2" NPS

1-3 "S" Length

CODE	DESCRIPTION
XX	Specify length in inches using two digits plus fractional length

1-4 Material

CODE	DESCRIPTION
XX	Specify two digit material code as stated in the Thermowell Material Table located near the front of this catalog

1-5 Optional "T" Lag Dimension

CODE	DESCRIPTION
Leave blank if no lag is required	
T__	Specify "T" dimension in inches

1-6 Options

CODE	DESCRIPTION
C8	316 stainless steel well cap and chain
C22	Brass well cap and chain
S	Well stamped with customer specified part number

Reduced-Tip, Socket-Weld Thermowells



Reduced-Tip, Socket-Weld



Reduced-Tip, Socket-Weld with Lag

Reduced-Tip, Socket-Weld Thermowells are available in a variety of materials, process connection sizes, lengths, and optional lagging extensions. Thermowell specifications should be determined based on process conditions, which include strength, temperature, pressure and corrosion resistance requirements. The Reduced-Tip, Socket-Weld is designed to be used with a class 3000 weld-o-let, which allows the thermowell to be welded permanently into the process. The stepped construction is used in standard duty applications and increases the speed of response while maintaining mechanical strength. They are designed with standard 0.260” bore diameters to accommodate sensing elements with a 0.252” maximum diameter. These wells are available as separate components or as part of complete sensor assemblies.

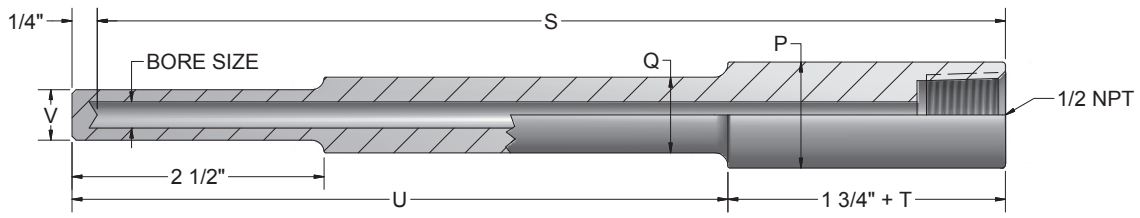

("U" length for non-lagging wells) = "S" -1 1/2"
("U" length for lagging wells) = "S" -1 1/2" - "T"
(To solve for "T"), "T" = "S" - "U" -1 1/2" (When "U" and "S" are specified)

Thermowell Dimensions

"P" PIPE SIZE		"Q"	"V"
NOM.	DIA.		
3/4"	1.050"	3/4" Dia.	1/2" Dia.
1"	1.315"	7/8" Dia.	1/2" Dia.
1 1/4"	1.660"	1 1/4" Dia.	7/8" Dia.
1 1/2"	1.900"	1 1/2" Dia.	7/8" Dia.

ORDER CODES

Example Order Number:

1-0	1-1	1-2	1-3	1-4	1-5	1-6
RW	4	D	09	08	T2	C8S

1-0 Well Type

CODE	DESCRIPTION
RW	Reduced-tip, socket-weld

1-1 Bore Size

CODE	DESCRIPTION
4	0.260" Dia. bore

1-2 Pipe Size "P"

CODE	DESCRIPTION
D	3/4" NPS
E	1" NPS
F	1 1/4" NPS
G	1 1/2" NPS

1-3 "S" Length

CODE	DESCRIPTION
XX	Specify length in inches using two digits plus fractional length

1-4 Material

CODE	DESCRIPTION
XX	Specify two digit material code as stated in the Thermowell Material Table located near the front of this catalog

1-5 Optional "T" Lag Dimension

CODE	DESCRIPTION
Leave blank if no lag is required	
T__	Specify "T" dimension in inches

1-6 Options

CODE	DESCRIPTION
C8	316 stainless steel well cap and chain
C22	Brass well cap and chain
S	Well stamped with customer specified part number

Weld-In Thermowells



Weld-In Thermowells are available in a variety of materials, process connection sizes, lengths and optional lagging extensions. Thermowell specifications should be based on process conditions, which include strength, temperature, pressure and corrosion resistance requirements. Weld-In thermowells are welded directly into the process apparatus. They are designed with a standard 0.260” or 0.385” bore diameter to accommodate sensing elements with a 0.252” or 0.377” maximum diameter respectively. The tapered design is suited for heavy duty applications where greater rigidity is required due to process conditions. These wells are available as separate components or as part of complete sensor assemblies.

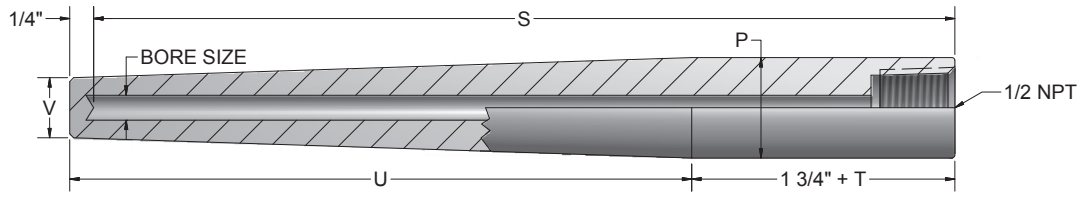

("U" length for non-lagging wells) = "S" -1 1/2"
("U" length for lagging wells) = "S" -1 1/2" - "T"
(To solve for "T"), "T" = "S" - "U" -1 1/2" (When "U" and "S" are specified)

Thermowell Dimensions

"P" PIPE SIZE		"V" (0.260")	"V" (0.385")
NOM.	DIA.		
3/4"	1.050"	5/8" Dia.	49/64" Dia.
1"	1.315"	49/64" Dia.	49/64" Dia.
1 1/4"	1.660"	1" Dia.	1" Dia.
1 1/2"	1.900"	1 1/8" Dia.	1 1/8" Dia.

ORDER CODES

Example Order Number:

1-0	1-1	1-2	1-3	1-4	1-5	1-6
WI	4	D	09	08	T2	C8S

1-0 Well Type

CODE	DESCRIPTION
WI	Weld-In

1-1 Bore Size

CODE	DESCRIPTION
4	0.260" Dia. bore
6	0.385" Dia. bore

1-2 Pipe Size "P"

CODE	DESCRIPTION
D	3/4" NPS
E	1" NPS
F	1 1/4" NPS
G	1 1/2" NPS

1-3 "S" Length

CODE	DESCRIPTION
XX	Specify length in inches using two digits plus fractional length

1-4 Material

CODE	DESCRIPTION
XX	Specify two digit material code as stated in the Thermowell Material Table located near the front of this catalog

1-5 "T" Lag Dimension

CODE	DESCRIPTION
Leave blank if no lag is required	
T__	Specify "T" dimension in inches

1-6 Options

CODE	DESCRIPTION
C8	316 stainless steel well cap and chain
C22	Brass well cap and chain
S	Well stamped with customer specified part number

Sanitary, Weld-In Thermowells



Sanitary, Weld-In Thermowells are offered in 304 and 316 stainless steel. They are available in a variety of lengths, process connection sizes, and optional lagging extensions. The thermowell is to be welded into a tank or vat with a full crevice-free fillet-weld to prevent corrosion, bacteria growth, and product contamination. Thermowells are supplied with a surface finish that meets or exceeds 32 µin R_a. Surface finishes of 15 µin R_a or better are available upon request. They are designed with a standard 0.260" or 0.385" bore diameter to accommodate sensing elements with a 0.252" or 0.377" maximum diameter respectively. These wells are available as separate components or as part of complete sensor assemblies.

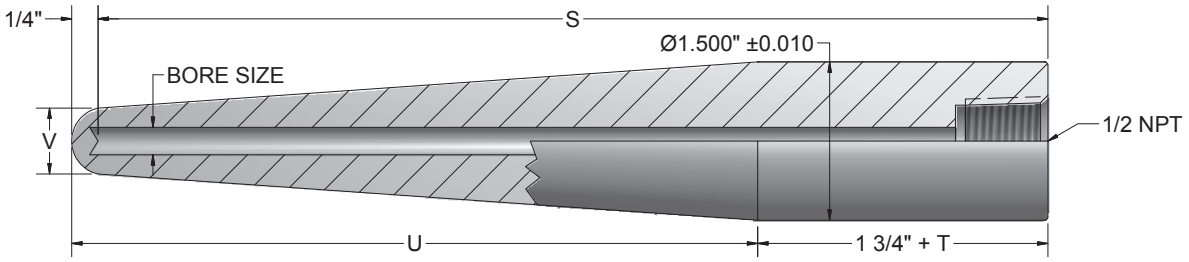

74-

("U" length for non-lagging wells) = "S" -1 1/2"
("U" length for lagging wells) = "S" -1 1/2" - "T"
(To solve for "T"), "T" = "S" - "U" -1 1/2" (When "U" and "S" are specified)

Thermowell Dimensions

BORE SIZE	"V"
0.260" Dia.	5/8" Dia.
0.385" Dia.	49/64" Dia.

ORDER CODES

Example Order Number:

1-0	1-1	1-2	1-3	1-4	1-5	1-6
WS	4	09	08	T2	C8S	

1-0 Well Type

CODE	DESCRIPTION
WS	Sanitary weld-in

1-1 Bore Size

CODE	DESCRIPTION
4	0.260" Dia. bore
6	0.385" Dia. bore

1-2 "S" Length

CODE	DESCRIPTION
XX	Specify length in inches using two digits plus fractional length

1-5 Options

CODE	DESCRIPTION
C8	316 stainless steel well cap and chain
C22	Brass well cap and chain
S	Well stamped with customer specified part number

1-4 Optional "T" Lag Dimension

CODE	DESCRIPTION
Leave blank if no lag is required	
T__	Specify "T" dimension in inches

1-3 Material

CODE	DESCRIPTION
08	316 stainless steel
09	304 stainless steel

Standard, Flanged Thermowells



Standard, Flanged Thermowells are available in a variety of materials, flange types, flange sizes, and pressure ratings. They are also available in various lengths and optional lagging extensions. Thermowell specifications should be determined based on process conditions, which include strength, temperature, pressure and corrosion resistance requirements. The standard, flanged thermowell is supplied with a straight shank and is designed with a 0.260” or 0.385” bore diameter to accommodate sensing elements with a 0.252” or 0.377” maximum diameter respectively. These wells are available as separate components or as part of complete sensor assemblies.

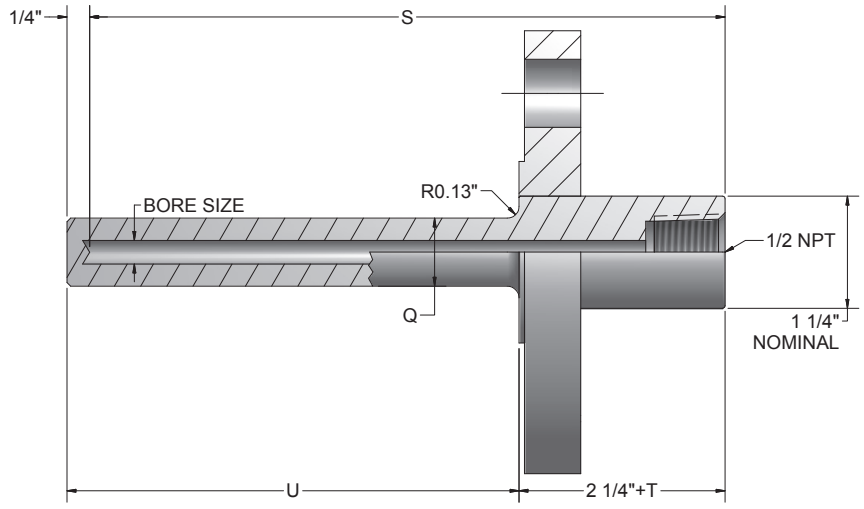

Thermowell Dimensions

BORE	"Q" Dim.
0.260	3/4"
0.385	7/8"

("U" length for non-lagging wells) = "S" - 2"
("U" length for lagging wells) = "S" - 2" - "T"
(To solve for "T"), "T" = "S" - "U" - 2" (When "U" and "S" are specified)

ORDER CODES

Example Order Number:

1-0	1-1	1-2	1-3	1-4	1-5	1-6	1-7	1-8
SF	4	15	R	1	09	08	T2	C8S

1-0 Well Type

CODE	DESCRIPTION
SF	Standard flanged

1-1 Bore Size

CODE	DESCRIPTION
4	0.260" Dia. bore
6	0.385" Dia. bore

1-2 Flange Size*

CODE	DESCRIPTION
10	1" (DN 25)
13	1 1/4" (DN 32)
15	1 1/2" (DN 40)
20	2" (DN 50)
30	3" (DN 80)

1-3 Flange Type

CODE	DESCRIPTION
F	Flat face
J	Ring joint
R	Raised face

1-4 Pressure Rating*

CODE	DESCRIPTION
1	150 Class
3	300 Class
6	600 Class
9	900 Class
15	1500 Class

1-5 "S" Length

CODE	DESCRIPTION
XX	Specify length in inches using two digits plus fractional length

1-6 Material

CODE	DESCRIPTION
XX	Specify two digit material code as stated in the Thermowell Material Table located near the front of this catalog

1-7 Optional "T" Lag Dimension

CODE	DESCRIPTION
Leave blank if no lag is required	
T__	Specify "T" dimension in inches using two digits plus any fractional length

1-8 Options

CODE	DESCRIPTION
C8	316 stainless steel well cap and chain
C22	Brass well cap and chain
F	Full penetration weld
S	Well stamped with customer specified part number

* Other flange sizes and pressure ratings available upon request.

Heavy-Duty, Flanged Thermowells



Heavy-Duty, Flanged Thermowells are available in a variety of materials, flange types, flange sizes, and pressure ratings. They are also available in various lengths and optional lagging extensions. Thermowell specifications should be determined based on process conditions, which include strength, temperature, pressure and corrosion resistance requirements. The heavy-duty, flanged thermowell is supplied with a 0.260” or 0.385” bore diameter to accommodate sensing elements with a 0.252” or 0.377” maximum diameter. The tapered design is suited for heavy-duty applications where greater rigidity is required for increased pressure and flow process conditions. These wells are available as separate components or as part of complete sensor assemblies.

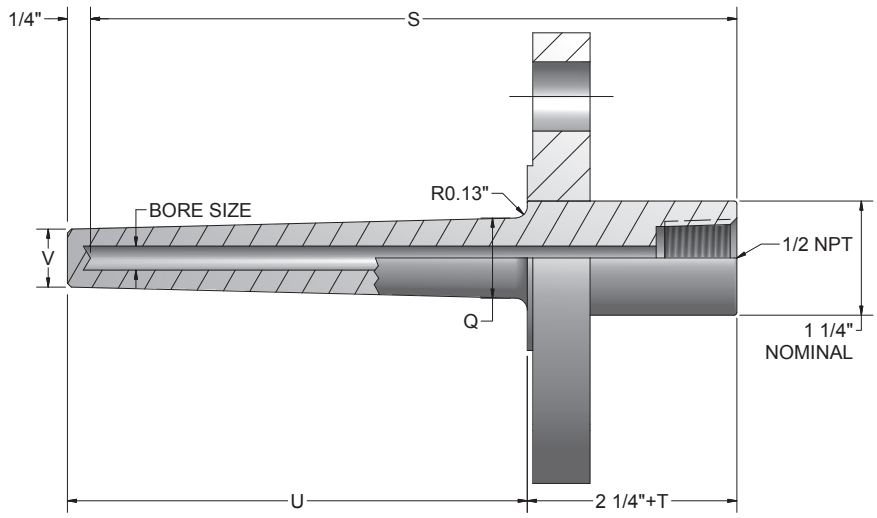

Maximum tapered length is 16"
("U" length for non-lagging wells) = "S" - 2"
("U" length for lagging wells) = "S" - 2" - "T"
(To solve for "T"), "T" = "S" - "U" - 2" (When "U" and "S" are specified)

Thermowell Dimensions

FLANGE	"Q" (0.260")	"V"(0.260")	"V"(0.385")
1"	7/8" Dia.	5/8" Dia.	49/64" Dia.
1 1/4" thru 3"	1 1/16" Dia.	5/8" Dia.	49/64" Dia.

ORDER CODES

Example Order Number:

1-0	1-1	1-2	1-3	1-4	1-5	1-6	1-7	1-8
HF	4	15	R	1	09	08	T2	C8S

1-0 Well Type

CODE	DESCRIPTION
HF	Heavy-duty, flanged

1-1 Bore Size

CODE	DESCRIPTION
4	0.260" Dia. bore
6	0.385" Dia. bore

1-2 Flange Size*

CODE	DESCRIPTION
10	1" (DN 25)
13	1 1/4" (DN 32)
15	1 1/2" (DN 40)
20	2" (DN 50)
30	3" (DN 80)

1-3 Flange Type

CODE	DESCRIPTION
F	Flat face
J	Ring joint
R	Raised face

1-4 Pressure Rating*

CODE	DESCRIPTION
1	150 Class
3	300 Class
6	600 Class
9	900 Class
15	1500 Class

1-5 "S" Length

CODE	DESCRIPTION
XX	Specify length in inches using two digits plus fractional length

1-6 Material

CODE	DESCRIPTION
XX	Specify two digit material code as stated in the Thermowell Material Table located near the front of this catalog

1-7 Optional "T" Lag Dimension

CODE	DESCRIPTION
Leave blank if no lag is required	
T__	Specify "T" dimension in inches

1-8 Options

CODE	DESCRIPTION
C8	316 stainless steel well cap and chain
C22	Brass well cap and chain
F	Full penetration weld
S	Well stamped with customer specified part number

* Other flange sizes and pressure ratings available upon request.

Reduced-Tip, Flanged Thermowells



Reduced-Tip, Flanged Thermowells are available in a variety of materials, flange types, flange sizes, and pressure ratings. They are also available in various lengths and optional lagging extensions. Thermowell specifications should be determined based on process conditions, which include strength, temperature, pressure and corrosion resistance requirements. The stepped construction is normally used in standard-duty applications, and increases the speed of response while maintaining mechanical strength. They are designed with standard 0.260” bore diameters to accommodate sensing elements with 0.252” maximum diameters. These wells are available as separate components or as part of complete sensor assemblies.

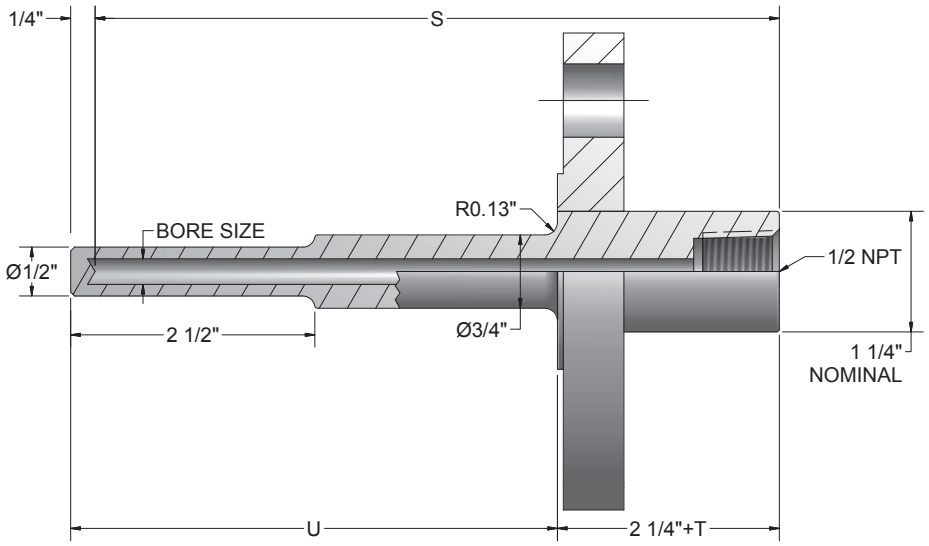

("U" length for non-lagging wells) = "S" - 2"
("U" length for lagging wells) = "S" - 2" - "T"
(To solve for "T"), "T" = "S" - "U" - 2" (When "U" and "S" are specified)

ORDER CODES

Example Order Number:

1-0	1-1	1-2	1-3	1-4	1-5	1-6	1-7	1-8
RF	4	15	R	1	09	08	T2	C8S

1-0 Well Type

CODE	DESCRIPTION
RF	Reduced-tip, flanged

1-1 Bore Size

CODE	DESCRIPTION
4	0.260" Dia. bore

1-2 Flange Size*

CODE	DESCRIPTION
10	1" (DN 25)
13	1 1/4" (DN 32)
15	1 1/2" (DN 40)
20	2" (DN 50)
30	3" (DN 80)

1-3 Flange Type

CODE	DESCRIPTION
F	Flat face
J	Ring joint
R	Raised face

1-4 Pressure Rating*

CODE	DESCRIPTION
1	150 Class
3	300 Class
6	600 Class
9	900 Class
15	1500 Class

1-5 "S" Length

CODE	DESCRIPTION
XX	Specify length in inches using two digits plus fractional length

1-6 Material

CODE	DESCRIPTION
XX	Specify two digit material code as stated in the Thermowell Material Table located near the front of this catalog

1-7 Optional "T" Lag Dimension

CODE	DESCRIPTION
Leave blank if no lag is required	
T__	Specify "T" dimension in inches

1-8 Options

CODE	DESCRIPTION
C8	316 stainless steel well cap and chain
C22	Brass well cap and chain
S	Well stamped with customer specified part number

* Other flange sizes and pressure ratings available upon request.

Heavy-Duty Van Stone Thermowells



Heavy-Duty Van Stone Thermowells are available in a variety of materials, flange sizes, and pressure ratings. They are also available in various lengths and optional lagging extensions. Thermowell specifications should be determined based on process conditions, which include strength, temperature, pressure and corrosion resistance requirements. The heavy-duty Van Stone thermowell is supplied with a 0.260” or 0.385” bore diameter to accommodate sensing elements with a 0.252” or 0.377” maximum diameter respectively. Van Stone thermowells are connected using a separate and reusable backing flange, eliminating the need for expensive flange materials. The tapered design is suited for heavy-duty applications where greater rigidity is required due to increased pressure and flow process conditions. These wells are available as separate components or as part of complete sensor assemblies.

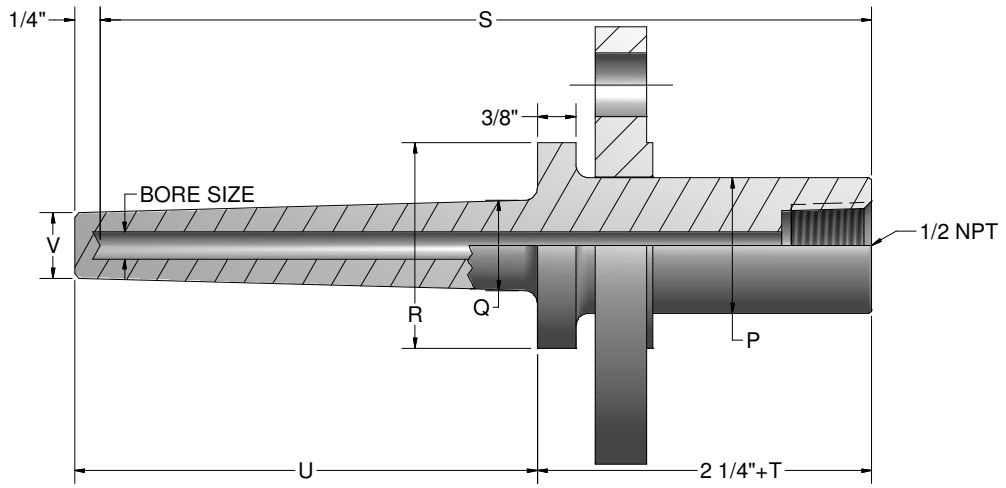

Maximum tapered length is 16"
("U" length for non-lagging wells) = "S" - 2"
("U" length for lagging wells) = "S" - 2" - "T"
(To solve for "T"), "T" = "S" - "U" - 2" (When "U" and "S" are specified)

Thermowell Dimensions

"P" PIPE SIZE		"R" DIA.	"Q" DIA.	"V" 0.260" DIA.	"V" 0.385" DIA.
NOM.	DIA.				
1"	1.315"	2"	7/8"	5/8"	49/64"
1 1/2"	1.900"	2 7/8"	1 1/16"	5/8"	49/64"

ORDER CODES

Example Order Number:

1-0	1-1	1-2	1-3	1-4	1-5	1-6	1-7	1-8
HF	4	15	V	1	09	08	T2	C8S

1-0 Well Type

CODE	DESCRIPTION
HF	Heavy-duty Van Stone

1-1 Bore Size

CODE	DESCRIPTION
4	0.260" Dia. bore
6	0.385" Dia. bore

1-2 Flange Size*

CODE	DESCRIPTION
10	1" (DN 25)
15	1 1/2" (DN 40)

1-3 Flange Type

CODE	DESCRIPTION
V	Van Stone (lap joint)

1-4 Pressure Rating*

CODE	DESCRIPTION
0	No backing flange
1	150 Class
3	300 Class
6	600 Class
9	900 Class
15	1500 Class
Carbon steel lap joint flange standard	

1-5 "S" Length

CODE	DESCRIPTION
XX	Specify length in inches using two digits plus fractional length

1-6 Material

CODE	DESCRIPTION
XX	Specify two digit material code as stated in the Thermowell Material Table located near the front of this catalog

1-7 "T" Lag Dimension

CODE	DESCRIPTION
Leave blank if no lag is required	
T__	Specify "T" dimension in inches using two digits plus any fractional length

1-8 Options

CODE	DESCRIPTION
C8	316 stainless steel well cap and chain
C22	Brass well cap and chain
F	Full penetration weld
S	Well stamped with customer specified part number

* Other flange sizes and pressure ratings available upon request.

Straight Van Stone Thermowells



Straight Van Stone Thermowells are available in a variety of materials, flange sizes, and pressure ratings. They are also available in various lengths and optional lagging extensions. Thermowell specifications should be determined based on process conditions, which include strength, temperature, pressure and corrosion resistance requirements. The Straight Van Stone thermowell is supplied with a 0.260” or 0.385” bore diameter to accommodate sensing elements with a 0.252” or 0.377” maximum diameter respectively. Van Stone thermowells are connected using a separate and reusable backing flange eliminating the need for expensive flange materials. These wells are available as separate components or as part of complete sensor assemblies.

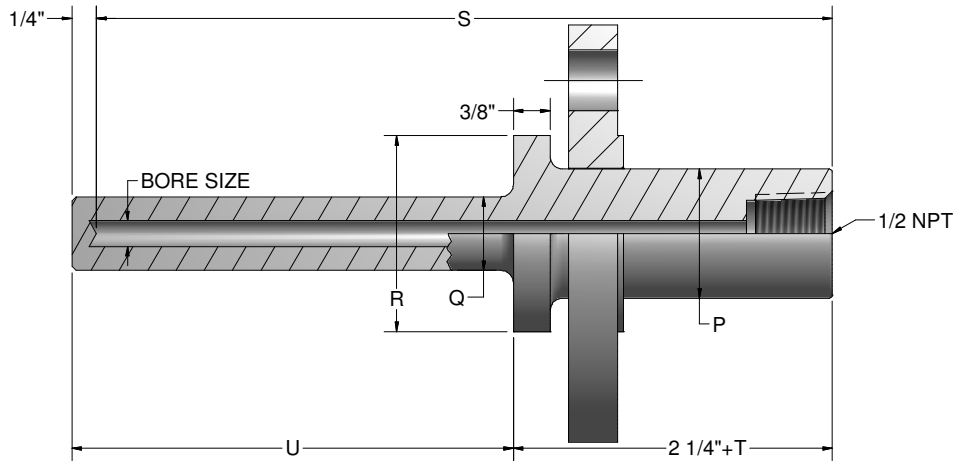

("U" length for non-lagging wells) = "S" - 2"
("U" length for lagging wells) = "S" - 2" - "T"
(To solve for "T"), "T" = "S" - "U" - 2" (When "U" and "S" are specified)

Thermowell Dimensions

"P" PIPE SIZE		"R" DIA.	"Q" 0.260" DIA.	"Q" 0.385" DIA.
NOM.	DIA.			
1"	1.315"	2"	3/4"	7/8"
1 1/2"	1.900"	2 7/8"	3/4"	7/8"

ORDER CODES

Example Order Number:

1-0	1-1	1-2	1-3	1-4	1-5	1-6	1-7	1-8
SF	4	15	V	1	09	08	T2	C8S

1-0 Well Type

CODE	DESCRIPTION
SF	Straight Van Stone

1-1 Bore Size

CODE	DESCRIPTION
4	0.260" Dia. bore
6	0.385" Dia. bore

1-2 Flange Size*

CODE	DESCRIPTION
10	1" (DN25)
15	1 1/2" (DN40)

1-3 Flange Type

CODE	DESCRIPTION
V	Van Stone (lap joint)

1-4 Pressure Rating*

CODE	DESCRIPTION
0	No backing flange
1	150 Class
3	300 Class
6	600 Class
9	900 Class
15	1500 Class
Carbon steel lap joint flange standard	

1-5 "S" Length

CODE	DESCRIPTION
XX	Specify length in inches using two digits plus fractional length

1-6 Material

CODE	DESCRIPTION
XX	Specify two digit material code as stated in the Thermowell Material Table located near the front of this catalog

1-7 Optional "T" Lag Dimension

CODE	DESCRIPTION
Leave blank if no lag is required	
T__	Specify "T" dimension in inches

1-8 Options

CODE	DESCRIPTION
C8	316 stainless steel well cap and chain
C22	Brass well cap and chain
S	Well stamped with customer specified part number

* Other flange sizes and pressure ratings available upon request.

Reduced-Tip Van Stone Thermowells



Reduced-Tip Van Stone Thermowells are available in a variety of materials, flange sizes, and pressure ratings. They are also offered in various lengths and optional lagging extensions. Thermowell specifications should be determined based on process conditions, which include strength, temperature, pressure and corrosion resistance requirements. The Reduced-Tip Van Stone thermowell is supplied with a 0.260” bore diameter to accommodate sensing elements with a 0.252” maximum diameter. The stepped construction is normally used in standard-duty applications and increases the speed of response while maintaining mechanical strength. Van Stone thermowells are connected using a separate and reusable backing flange, eliminating the need for expensive flange materials. These wells are available as separate components or as part of complete sensor assemblies.

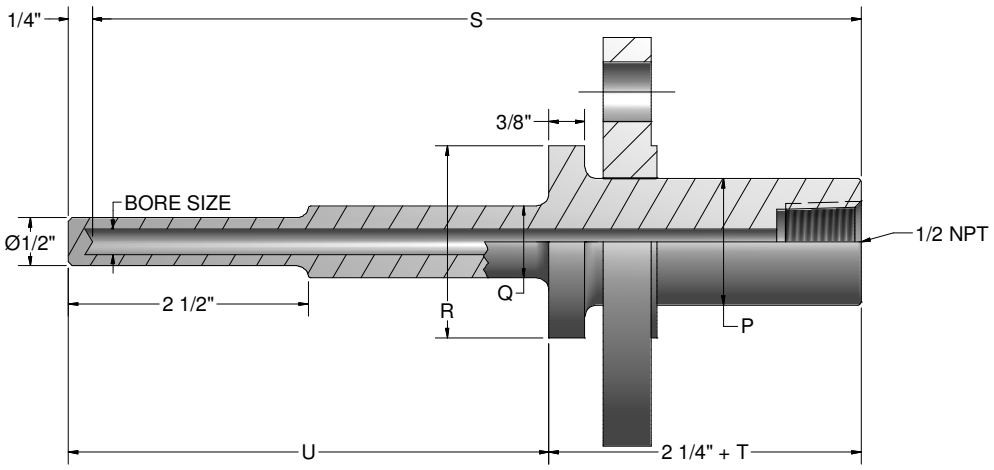

Thermowell Dimensions

"P" PIPE SIZE NOM.	"P" DIA.	"R" DIA.	"Q" DIA.
1"	1.315"	2"	3/4"
1 1/2"	1.900"	2 7/8"	7/8"

("U" length for non-lagging wells) = "S" - 2"
("U" length for lagging wells) = "S" - 2" - "T"
(To solve for "T"), "T" = "S" - "U" - 2" (When "U" and "S" are specified)

ORDER CODES

Example Order Number:

1-0	1-1	1-2	1-3	1-4	1-5	1-6	1-7	1-8
RF	4	15	V	1	09	08	T2	C8S

1-0 Well Type

CODE	DESCRIPTION
RF	Reduced-Tip Van Stone

1-1 Bore Size

CODE	DESCRIPTION
4	0.260" Dia. bore

1-2 Flange Size*

CODE	DESCRIPTION
10	1" (DN25)
15	1 1/2" (DN40)

1-3 Flange Type

CODE	DESCRIPTION
V	Van Stone (lap joint)

1-4 Pressure Rating*

CODE	DESCRIPTION
0	No backing flange
1	150 Class
3	300 Class
6	600 Class
9	900 Class
15	1500 Class
Carbon steel backing flange standard	

1-5 "S" Length

CODE	DESCRIPTION
XX	Specify length in inches using two digits plus fractional length

1-6 Material

CODE	DESCRIPTION
XX	Specify two digit material code as stated in the Thermowell Material Table located near the front of this catalog

1-7 Optional "T" Lag Dimension

CODE	DESCRIPTION
Leave blank if no lag is required	
T__	Specify "T" dimension in inches

1-8 Options

CODE	DESCRIPTION
C8	316 stainless steel well cap and chain
C22	Brass well cap and chain
S	Well stamped with customer specified part number

* Other flange sizes and pressure ratings available upon request.

Sanitary-Connected Thermowells



Straight-Stem, Sanitary-Connected



Reduced-Tip, Sanitary-Connected

Sanitary-Connected Thermowells are offered in 304 and 316 stainless steel. The DW and DR series are welded constructions, and they are available in a variety of lengths, cap styles, cap sizes, and optional lagging extensions. Thermowells are supplied with a surface finish that meets or exceeds 32 µin R_a. Surface finishes of 15 µin R_a or better are available upon request. They are designed with a standard 0.260" bore diameter to accommodate sensing elements with a 0.252" maximum diameter. These wells are available as separate components or as part of complete sensor assemblies.

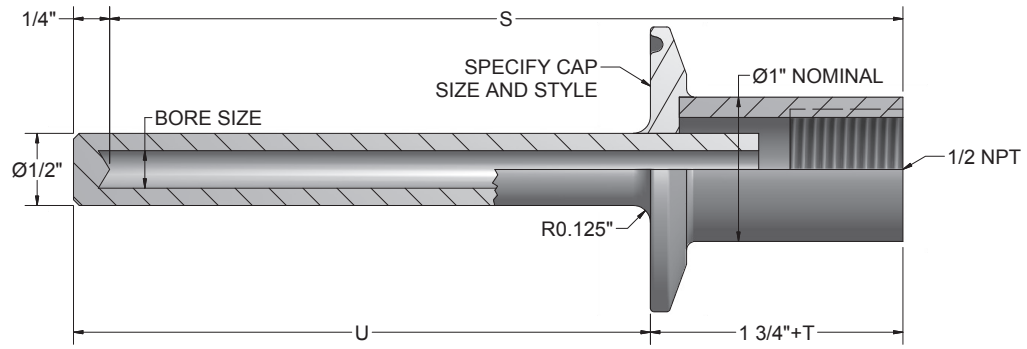

74-

("U" length for non-lagging wells) = "S" - 1 1/2"
("U" length for lagging wells) = "S" - 1 1/2" - "T"
(To solve for "T"), "T" = "S" - "U" - 1 1/ 2" (When "U" and "S" are specified)

ORDER CODES

Example Order Number:

1-0	1-1	1-2	1-3	1-4	1-5	1-6
DW	4	25	09	08	T2	C8S

1-0 Well Type

CODE	DESCRIPTION
DW	Sanitary well
DR	Reduced-Tip Sanitary well

1-1 Bore Size

CODE	DESCRIPTION
4	0.260" Dia. bore

1-2 Cap Size & Style

CODE	DESCRIPTION
15	1", 1 1/2" Triclamp® 16 AMP
25	2" Triclamp® 16 AMP
35	2 1/2" Triclamp® 16 AMP
45	3" Triclamp® 16 AMP
Other styles - sizes available. Consult factory.	

1-3 "S" Length

CODE	DESCRIPTION
XX	Specify length in inches using two digits plus fractional length

1-4 Material

CODE	DESCRIPTION
08	316 stainless steel
09	304 stainless steel

1-5 Optional "T" Lag Dimension

CODE	DESCRIPTION
Leave blank if no lag is required	
T__	Specify "T" dimension in inches

1-6 Options

CODE	DESCRIPTION
C8	316 stainless steel well cap and chain
S	Well stamped with customer specified part number

W81 Series Sanitary Weld-In Thermowells



Sanitary Weld-In Thermowells are offered in 304 and 316 stainless steel. The thermowell is designed to be welded into a tank or vat with a full crevice-free fillet-weld to prevent corrosion, bacteria growth, and product contamination. Thermowells are supplied with a surface finish that meets or exceeds 32 µin R_a. Surface finishes of 15 µin R_a or better are available upon request. They are designed with a standard 0.260" bore diameter to accommodate sensing elements with a 0.252" maximum diameter. These wells are available as separate components or as part of complete sensor assemblies.

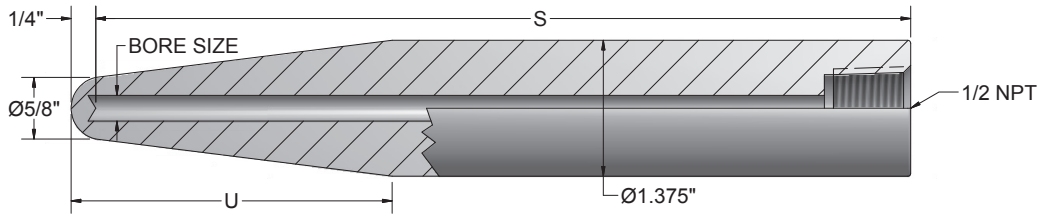

74-

ORDER CODES

Example Order Number:

1-0		1-1	1-2	1-3
W81	-	1	9	S

1-0 Well Type

CODE	DESCRIPTION
W81	Sanitary weld-in

1-1 Length

CODE	"S" LENGTH	"U" LENGTH
1	8 1/4"	3 1/4"
2	9 7/8"	3 1/4"
3	11 5/8"	5"
4	12 7/8"	3 3/4"

1-2 Material

CODE	DESCRIPTION
8	316 stainless steel
9	304 stainless steel

1-3 Options

CODE	DESCRIPTION
C8	316 stainless steel well cap and chain
S	Well stamped with customer specified part number

Thermowell Options and Specifications

The following options are available on Pyromation thermowells. Please contact our sales department for information and current pricing.

Documentation/Testing	
Certificate of Compliance	C of C
Hydrostatic Test (Internal or External)	ASTM E1003 Compliant
Liquid Dye Penetrant Test	ASTM E165 Compliant
Material Test Reports	MTR
NACE	NACE Certification available for applicable materials. (Barstock thermowells meet this specification. Flanged thermowells can be heat treated to comply.)
Positive Material Identification (PMI)	X-Ray Fluorescence Spectrometry
Surface Roughness Test	ASME B46.1
Wake Frequency Calculation	ASME PTC 19.3 TW
Weld X-Ray Inspection	Call for Pricing
Services	
Expedited Delivery	Call for Pricing
Oxygen cleaning	ASTM G93 Compliant (when specified)
Stamping	10 Characters Maximum
Full-Penetration Weld	Performed by welders certified to ASME Section IX, Boiler and Pressure Vessel Code
Components/Coatings	
Abrasive Coatings	Call for Pricing
Plug and Chain - Brass	Call for Pricing
Plug and Chain - Stainless Steel	Call for Pricing
Ring-Joint Flange	Call for Pricing
Tantalum Jacket	Call for Pricing
Teflon® Coatings (FEP)	Call for Pricing
Industry Specifications	
Canadian Registration Numbers (CRN)	ASME B31.3 Process Piping
Flanged Thermowells	ASME B16.5 prior to fabrication
Heat Treating	Stress relief, annealing, and custom heat treating available upon request.
Material	ASTM Compliance and other applicable National Standards
Pipe Threads	ASME B1.20.1
Sanitary Thermowells	3-A Sanitary Council Standard. Authorization Number: 487 32 µin R_a Food Grade Surface Finish
Manufacturing Tolerances and Maximums	
"S" Length Maximum	32" maximum for standard drilled thermowells. For over 32" or for multi-piece construction, consult factory.
Bore "Bottom" Shape	"W" (nominal)
Bore Concentricity	± 10% of minimum wall thickness
Bore Depth	±0.020" (through 32.00")
Bore Diameter	+0.005" / -0.003" (bore sizes 0.125" through 0.406" I.D.)
Insertion Length	Lengths up to 22.50" ± 0.0625". Lengths from 22.50" through 48" ±0.125". Lengths over 48" ±0.25".
Stem Outside Diameter	±0.010"
Tapered Allowance	Maximum tapered length is 16.00". "U" dimensions greater than 16.00" in length are manufactured with a straight O.D. beginning below the process connection radius and following throughout with only the last 16.00" of "U" dimension tapered to minor O.D.
Surface Finish	32 µin R_a standard
Internal Threads	1/2"-14 - NPT per ANSI B1.20.1 (1 to 3 turns deep per UL 866 and CSA C22.2 No. 30-M1986)
Marking	Standard marking includes material grade, material traceability codes, and CRN when applicable on drilled barstock and flanged thermowells

Teflon® is a registered trademark of E. I. du Pont de Nemours and Company.

ANSI Flanged Thermowell Data Sheet

Flanges comply with ASME B16.5 and are welded in accordance to the Boiler Code by ASME Section IX specifying certified welders using ASME Section II Compliant materials. Gaskets are not supplied with flanged thermowells and assemblies.

Nominal Pipe Size (inches)	Nominal Diameter DN	Flange Class	"O" Outside Diameter of Flange (inches)	"R" Outside Diameter Raised Face Large Male and Large Tongue (inches)	"W" Diameter of Bolt Circle (inches)	Number of Bolts	"t_f" Thickness of Flange Min. (inches)
1/2	15	150	3.50	1.38	2.38	4	0.38
3/4	20	150	3.88	1.69	2.75	4	0.44
1	25	150	4.25	2.00	3.12	4	0.50
1 1/4	32	150	4.62	2.50	3.50	4	0.56
1 1/2	40	150	5.00	2.88	3.88	4	0.62
2	50	150	6.00	3.62	4.75	4	0.69
2 1/2	65	150	7.00	4.12	5.50	4	0.81
3	80	150	7.50	5.00	6.00	4	0.88
3 1/2	90	150	8.50	5.50	7.00	8	0.88
4	100	150	9.00	6.19	7.50	8	0.88
1/2	15	300	3.75	1.38	2.62	4	0.50
3/4	20	300	4.62	1.69	3.25	4	0.56
1	25	300	4.88	2.00	3.50	4	0.62
1 1/4	32	300	5.25	2.50	3.88	4	0.69
1 1/2	40	300	6.12	2.88	4.50	4	0.75
2	50	300	6.50	3.62	5.00	8	0.81
2 1/2	65	300	7.50	4.12	5.88	8	0.94
3	80	300	8.25	5.00	6.62	8	1.06
3 1/2	90	300	9.00	5.50	7.25	8	1.12
4	100	300	10.00	6.19	7.88	8	1.19
1/2	15	600	3.75	1.38	2.62	4	0.56
3/4	20	600	4.62	1.69	3.25	4	0.62
1	25	600	4.88	2.00	3.50	4	0.69
1 1/4	32	600	5.25	2.50	3.88	4	0.81
1 1/2	40	600	6.12	2.88	4.50	4	0.88
2	50	600	6.50	3.62	5.00	8	1.00
2 1/2	65	600	7.50	4.12	5.88	8	1.12
3	80	600	8.25	5.00	6.62	8	1.25
3 1/2	90	600	9.00	5.50	7.25	8	1.38
4	100	600	10.75	6.19	8.50	8	1.50

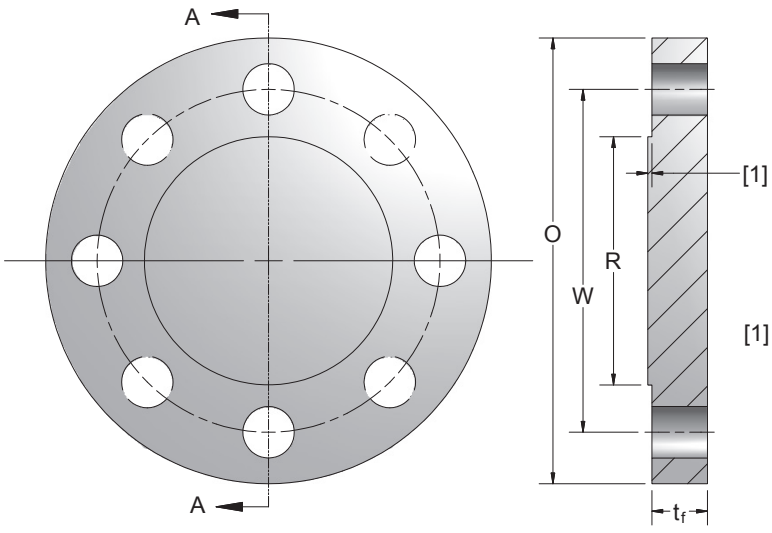

SECTION A-A

[1] HEIGHT OF RAISED FACE
0.06" FOR 150 & 300 CLASS
0.25" FOR ALL OTHER CLASSES

Maximum Allowable Working Pressure

Weld-In Thermowells

MATERIAL		ORDER CODE	0.260" BORE		0.385" BORE		TEMPERATURE RANGE			
			Wall = 0.158"/"V" = 5/8"		Wall = 0.165"/"V" = 49/64"		C		F	
ASTM SPECIFICATION	TYPE		MIN TEMP	MAX TEMP	MIN TEMP	MAX TEMP	MIN	MAX	MIN	MAX
A479 Gr. 304/304L	304/304L	09	7361 psi	3400 psi	6007 psi	2800 psi	-28 C	538 C	-20 F	1000 F
A479 Gr. 316/316L	316/316L	08	7234 psi	5200 psi	5900 psi	4200 psi	-28 C	538 C	-20 F	1000 F
A479 Gr. 347	347	36	7234 psi	5200 psi	5900 psi	4200 psi	-28 C	538 C	-20 F	1000 F
A105	A105	61	8175 psi	5062 psi	6753 psi	4259 psi	-28 C	482 C	-20 F	900 F
B164 Gr. N04400	Alloy 400	27	6178 psi	4970 psi	5103 psi	4105 psi	-28 C	482 C	-20 F	900 F
B574 Gr. N10276	Alloy C-276	29	9336 psi	5713 psi	7712 psi	4700 psi	-28 C	538 C	-20 F	1000 F
A182 Gr. F11	F11	60	8175 psi	5156 psi	6753 psi	4259 psi	-28 C	482 C	-20 F	900 F
A182 Gr. F22	F22	59	10266 psi	5156 psi	8374 psi	4259 psi	-28 C	482 C	-20 F	900 F
A182 Gr. F91	F91	91	13670 psi	5156 psi	11142 psi	4259 psi	-28 C	482 C	-20 F	900 F
B473 Gr. N08020	Alloy 20	38	8361 psi	6038 psi	6907 psi	4988 psi	-28 C	425 C	-20 F	800 F
B166 Gr. N06600	Alloy 600	03	6410 psi	1511 psi	5295 psi	1258 psi	-28 C	650 C	-20 F	1200 F
B408 Gr. N08800	Alloy 800	37	7153 psi	4923 psi	5909 psi	4067 psi	-28 C	593 C	-20 F	1100 F

Threaded Thermowells

MATERIAL		ORDER CODE	STRAIGHT				STEPPED		TEMPERATURE RANGE			
			0.260" BORE		0.385" BORE		0.260" BORE		C		F	
			Wall = 0.158"/"Q" = 5/8"		Wall = 0.165"/"V" = 49/64"		Wall = 0.101"/"V" = 1/2"					
ASTM SPECIFICATION	TYPE		MIN TEMP	MAX TEMP	MIN TEMP	MAX TEMP	MIN TEMP	MAX TEMP	MIN	MAX	MIN	MAX
A479 Gr. 304/304L	304/304L	09	7361 psi	3400 psi	6007 psi	2800 psi	5489 psi	2600 psi	-28 C	538 C	-20 F	1000 F
A479 Gr. 316/316L	316/316L	08	7234 psi	5200 psi	5900 psi	4200 psi	5404 psi	3800 psi	-28 C	538 C	-20 F	1000 F
A479 Gr. 347	347	36	7234 psi	5200 psi	5900 psi	4200 psi	5404 psi	3800 psi	-28 C	538 C	-20 F	1000 F
A105	A105	61	8175 psi	5062 psi	6753 psi	4259 psi	6238 psi	3934 psi	-28 C	482 C	-20 F	900 F
B164 Gr. N04400	Alloy 400	27	6178 psi	4970 psi	5103 psi	4105 psi	4713 psi	3792 psi	-28 C	482 C	-20 F	900 F
B574 Gr. N10276	Alloy C-276	29	9336 psi	5713 psi	7712 psi	4700 psi	7124 psi	4309 psi	-28 C	538 C	-20 F	1000 F
A182 Gr. F11	F11	60	8175 psi	5156 psi	6753 psi	4259 psi	6238 psi	3934 psi	-28 C	482 C	-20 F	900 F
A182 Gr. F22	F22	59	10266 psi	5156 psi	8374 psi	4259 psi	7671 psi	3934 psi	-28 C	482 C	-20 F	900 F
A182 Gr. F91	F91	91	13670 psi	5156 psi	11142 psi	4259 psi	10200 psi	3934 psi	-28 C	482 C	-20 F	900 F
B473 Gr. N08020	Alloy 20	38	8361 psi	6038 psi	6907 psi	4988 psi	6379 psi	4607 psi	-28 C	425 C	-20 F	800 F
B166 Gr. N06600	Alloy 600	03	6410 psi	1511 psi	5295 psi	1258 psi	4891 psi	1162 psi	-28 C	650 C	-20 F	1200 F
B408 Gr. N08800	Alloy 800	37	7153 psi	4923 psi	5909 psi	4067 psi	5458 psi	3757 psi	-28 C	593 C	-20 F	1100 F
MATERIAL		ORDER CODE	TAPERED				LIMITED SPACE		TEMPERATURE RANGE			
			Wall = 0.158"/"V" = 5/8"		Wall = 0.165"/"V" = 49/64"		Wall = 0.101"/"Q" = 1/2"		C		F	
ASTM SPECIFICATION	TYPE		MIN TEMP	MAX TEMP	MIN TEMP	MAX TEMP	MIN TEMP	MAX TEMP	MIN	MAX	MIN	MAX
A479 Gr. 304/304L	304/304L	09	7361 psi	3400 psi	6007 psi	2800 psi	5489 psi	2600 psi	-28 C	538 C	-20 F	1000 F
A479 Gr. 316/316L	316/316L	08	7234 psi	5200 psi	5900 psi	4200 psi	5404 psi	3800 psi	-28 C	538 C	-20 F	1000 F
A479 Gr. 347	347	36	7234 psi	5200 psi	5900 psi	4200 psi	5404 psi	3800 psi	-28 C	538 C	-20 F	1000 F
A105	A105	61	8175 psi	5062 psi	6753 psi	4259 psi	6238 psi	3934 psi	-28 C	482 C	-20 F	900 F
B164 Gr. N04400	Alloy 400	27	6178 psi	4970 psi	5103 psi	4105 psi	4713 psi	3792 psi	-28 C	482 C	-20 F	900 F
B574 Gr. N10276	Alloy C-276	29	9336 psi	5713 psi	7712 psi	4700 psi	7124 psi	4309 psi	-28 C	538 C	-20 F	1000 F
A182 Gr. F11	F11	60	8175 psi	5156 psi	6753 psi	4259 psi	6238 psi	3934 psi	-28 C	482 C	-20 F	900 F
A182 Gr. F22	F22	59	10266 psi	5156 psi	8374 psi	4259 psi	7671 psi	3934 psi	-28 C	482 C	-20 F	900 F
A182 Gr. F91	F91	91	13670 psi	5156 psi	11142 psi	4259 psi	10200 psi	3934 psi	-28 C	482 C	-20 F	900 F
B473 Gr. N08020	Alloy 20	38	8361 psi	6038 psi	6907 psi	4988 psi	6379 psi	4607 psi	-28 C	425 C	-20 F	800 F
B166 Gr. N06600	Alloy 600	03	6410 psi	1511 psi	5295 psi	1258 psi	4891 psi	1162 psi	-28 C	650 C	-20 F	1200 F
B408 Gr. N08800	Alloy 800	37	7153 psi	4923 psi	5909 psi	4067 psi	5458 psi	3757 psi	-28 C	593 C	-20 F	1100 F

These tables are for reference only. Other design factors should be taken into consideration in addition to temperature and pressure, such as vibration, corrosion, and installation method.

Maximum Allowable Working Pressure

Socket-Weld Thermowells

MATERIAL		ORDER CODE	STRAIGHT				STEPPED		TAPERED				TEMPERATURE RANGE			
			0.260" BORE		0.385" BORE		0.260" BORE		0.260" BORE		0.385" BORE					
			Wall = 0.158"/"Q" = 5/8"		Wall = 0.165"/"Q" = 49/64"		Wall = 0.101"/"V" = 1/2"		Wall = 0.158"/"V" = 5/8"		Wall = 0.165"/"V" = 49/64"		C		F	
ASTM SPECIFICATION	TYPE		MIN TEMP	MAX TEMP	MIN TEMP	MAX TEMP	MIN TEMP	MAX TEMP	MIN TEMP	MAX TEMP	MIN TEMP	MAX TEMP	MIN	MAX	MIN	MAX
A479 Gr. 304/304L	304/304L	09	7361 psi	3400 psi	6007 psi	2800 psi	5489 psi	2600 psi	7361 psi	3400 psi	6007 psi	2800 psi	-28 C	538C	-20 F	1000 F
A479 Gr. 316/316L	316/316L	08	7234 psi	5200 psi	5900 psi	4200 psi	5404 psi	3800 psi	7234 psi	5200 psi	5900 psi	4200 psi	-28 C	538 C	-20 F	1000 F
A479 Gr. 347	347	36	7234 psi	5200 psi	5900 psi	4200 psi	5404 psi	3800 psi	7234 psi	5200 psi	5900 psi	4200 psi	-28 C	538 C	-20 F	1000 F
A105	A105	61	8175 psi	5062 psi	6753 psi	4259 psi	6238 psi	3934 psi	8175 psi	5062 psi	6753 psi	4259 psi	-28 C	482 C	-20 F	900 F
B164 Gr. N04400	Alloy 400	27	6178 psi	4970 psi	5103 psi	4105 psi	4713 psi	3792 psi	6178 psi	4970 psi	5103 psi	4105 psi	-28 C	485 C	-20 F	900 F
B574 Gr. N10276	Alloy C-276	29	9336 psi	5713 psi	7712 psi	4700 psi	7124 psi	4309 psi	9336 psi	5713 psi	7712 psi	4700 psi	-28 C	538 C	-20 F	1000 F
A182 Gr. F11	F11	60	8175 psi	5156 psi	6753 psi	4259 psi	6238 psi	3934 psi	8175 psi	5156 psi	6753 psi	4259 psi	-28 C	482 C	-20 F	900 F
A182 Gr. F22	F22	59	10266 psi	5156 psi	8374 psi	4259 psi	7671 psi	3934 psi	10266 psi	5156 psi	8374 psi	4259 psi	-28 C	482 C	-20 F	900 F
A182 Gr. F91	F91	91	13670 psi	5156 psi	11142 psi	4259 psi	10200 psi	3934 psi	13670 psi	5156 psi	11142 psi	4259 psi	-28 C	482 C	-20 F	900 F
B473 Gr. N08020	Alloy 20	38	8361 psi	6038 psi	6907 psi	4988 psi	6379 psi	4607 psi	8361 psi	6038 psi	6907 psi	4988 psi	-28 C	425 C	-20 F	800 F
B166 Gr. N06600	Alloy 600	03	6410 psi	1511 psi	5295 psi	1258 psi	4891 psi	1162 psi	6410 psi	1511 psi	5295 psi	1258 psi	-28 C	650 C	-20 F	1200 F
B408 Gr. N08800	Alloy 800	37	7153 psi	4923 psi	5909 psi	4067 psi	5458 psi	3757 psi	7153 psi	4923 psi	5909 psi	4067 psi	-28 C	593 C	-20 F	1100 F

Flanged Thermowells

MATERIAL		ORDER CODE	CLASS 150		CLASS 300		CLASS 600		TEMPERATURE RANGE			
									C		F	
ASTM FLANGE SPECIFICATION	TYPE		MIN TEMP	MAX TEMP	MIN TEMP	MAX TEMP	MIN TEMP	MAX TEMP	MIN	MAX	MIN	MAX
A182 Gr. 304/304L	304/304L	09	275 psi	20 psi	720 psi	355 psi	1440 psi	710 psi	-28 C	538 C	-20 F	1000 F
A182 Gr. 316/316L	316/316L	08	275 psi	20 psi	720 psi	365 psi	1440 psi	725 psi	-28 C	538 C	-20 F	1000 F
A182 Gr. 347	347	36	275 psi	20 psi	720 psi	365 psi	1440 psi	725 psi	-28 C	538 C	-20 F	1000 F
A105	A105	61	285 psi	50 psi	740 psi	230 psi	1480 psi	460 psi	-28 C	482 C	-20 F	900 F
B564 Gr. N04400	Alloy 400	27	230 psi	50 psi	600 psi	275 psi	1200 psi	550 psi	-28 C	482 C	-20 F	900 F
B462 Gr. N10276	Alloy C-276	29	290 psi	20 psi	750 psi	365 psi	1500 psi	725 psi	-28 C	538 C	-20 F	1000 F
B462 Gr. N08020	Alloy 20	38	290 psi	80 psi	750 psi	510 psi	1500 psi	1015 psi	-28 C	425 C	-20 F	800 F
B564 Gr. N06600	Alloy 600	03	290 psi	20 psi[1]	750 psi	70 psi	1500 psi	135 psi	-28 C	650 C	-20 F	1200 F
B564 Gr. N08800	Alloy 800	37	275 psi	20 psi[1]	720 psi	325 psi	1440 psi	645 psi	-28 C	593 C	-20 F	1100 F

MATERIAL		ORDER CODE	CLASS 900[2]		CLASS 1500		CLASS 2500		TEMPERATURE RANGE			
									C		F	
ASTM FLANGE SPECIFICATION	TYPE		MIN TEMP	MAX TEMP	MIN TEMP	MAX TEMP	MIN TEMP	MAX TEMP	MIN	MAX	MIN	MAX
A182 Gr. 304/304L	304/304L	09	2160 psi	1065 psi	3600 psi	1770 psi	6000 psi	2845 psi	-28 C	538 C	-20 F	1000 F
A182 Gr. 316/316L	316/316L	08	2160 psi	1090 psi	3600 psi	1820 psi	5900 psi	3030 psi	-28 C	538 C	-20 F	1000 F
A182 Gr. 347	347	36	2160 psi	1090 psi	3600 psi	1820 psi	5900 psi	3030 psi	-28 C	538 C	-20 F	1000 F
A105	A105	61	2220 psi	690 psi	3705 psi	1150 psi	6170 psi	1915 psi	-28 C	482 C	-20 F	900 F
B564 Gr. N04400	Alloy 400	27	1800 psi	825 psi	3000 psi	1370 psi	5000 psi	2285 psi	-28 C	482 C	-20 F	900 F
B462 Gr. N10276	Alloy C-276	29	2250 psi	1090 psi	3750 psi	1820 psi	6250 psi	3030 psi	-28 C	538 C	-20 F	1000 F
B462 Gr. N08020	Alloy 20	38	2250 psi	1525 psi	3750 psi	2540 psi	6250 psi	4230 psi	-28 C	425 C	-20 F	800 F
B564 Gr. N06600	Alloy 600	03	2250 psi	205 psi	3750 psi	345 psi	5295 psi	570 psi	-28 C	650 C	-20 F	1200 F
B564 Gr. N08800	Alloy 800	37	2160 psi	965 psi	3600 psi	1610 psi	5900 psi	2685 psi	-28 C	593 C	-20 F	1100 F

[1] Class 150 flanges are only rated to 538 °C [1,000 °F].
[2] For NPS less than 3" a Class 1500 flange will be provided. The Class 900 flange and Class 1500 flange are dimensionally the same for this size range. For NPS 3" and 4" Class 900 or Class 1500 must be specified.

These tables are for reference only. Other design factors should be taken into consideration in addition to temperature and pressure, such as vibration, corrosion, and installation method.

Corrosive Service Guide

Corrosive Service Guide to Materials for Sheaths and Thermowells
Refer to A.S.M.E. Boiler Code, Section VIII for allowable stress levels
(Teflon®-coated thermowells and/or Teflon® sheaths may be substituted for all corrosive agents listed)

CORROSIVE AGENT	TEMP. °C	TEMP. °F	CONC. %	RECOM. MATERIAL	CORROSIVE AGENT	TEMP. °C	TEMP. °F	CONC. %	RECOM. MATERIAL
Acetic Acid (Glacial)	199	[390]	ALL	316 SS	Chlorine (Gas)	93	[200]	ALL	Monel®
Acetic Acid	143	[290]	80%	Hast. C		199	[390]	ALL	316 SS[1]
	199	[390]	50%	316 SS	Chlorine (Gas - Moist)	66	[150]	ALL	Hast C
	143	[290]	80%	Carp. 20[1]	Chloroacetic Acid	182	[360]	ALL	Hast. B
Acetic Anhydride	132	[270]	ALL	Hast. C	Chloroform	93	[200]	ALL	Nickel
	199	[390]	ALL	316 SS[1]		93	[200]	ALL	Carp. 20[1]
Acetone	199	[390]	ALL	316 SS	Chromic Acid	93	[200]	50%	Titanium
Acetylene	199	[390]	ALL	304 SS		93	[200]	50%	Hast. C[1]
Alcohol, Ethyl	93	[200]	ALL	Hast. C	Citric Acid	127	[260]	ALL	Hast. C
	199	[390]	ALL	316 SS[1]		93	[200]	ALL	Carp. 20[1]
Aluminum Chloride (Aqueous)	143	[290]	ALL	Hast. B	Copper Chloride	88	[190]	ALL	Titanium
	143	[290]	ALL	Nickel[1]		88	[190]	ALL	Hast. C[1]
Aluminum Nitrate (Saturated)	93	[200]	ALL	446 SS	Copper Nitrate	149	[300]	ALL	304 SS
	88	[190]	ALL	316 SS[1]	Copper Sulfate	93	[200]	ALL	Hast. C
Aluminum Sulfate (Saturated)	93	[200]	ALL	Titanium		199	[390]	ALL	316 SS[1]
	93	[200]	ALL	316 SS[1]	Corn Oil	238	[460]	ALL	TFE
Ammonia (Anhydrous)	293	[560]	ALL	316 SS		193	[380]	ALL	FEP
Ammonia (Gas)	93	[200]	ALL	304 SS		171	[340]	ALL	316 SS[1]
Ammonium Chloride	88	[190]	ALL	Titanium	Crude Oil	93	[200]	ALL	304 SS
	293	[560]	ALL	Nickel[1]	Cyanogen Gas	238	[460]	ALL	TFE
	71	[160]	50%	Nickel		193	[380]	ALL	FEP
Ammonium Hydroxide	27	[80]	ALL	Steel		171	[340]	ALL	316 SS[1]
	82	[180]	ALL	Steel[1]	Ether	88	[190]	ALL	304 SS
Ammonium Nitrate	93	[200]	ALL	Carp. 20	Ethyl Acetate	93	[200]	ALL	Titanium
Ammonium Sulfate	93	[200]	SAT.	Hast. B		199	[390]	ALL	316 SS[1]
	143	[290]	SAT.	304 SS[1]	Ethyl Chloride (Dry)	293	[560]	ALL	316 SS
	93	[200]	10 - 40%	Titanium	Ethylene Glycol	93	[200]	ALL	Carp. 20
	199	[390]	10 - 40%	316 SS[1]		93	[200]	ALL	304 SS[1]
Amyl Acetate	143	[290]	ALL	304 SS	Ethylene Oxide	21	[70]	ALL	Hast. C
Aniline	254	[490]	ALL	304 SS		199	[390]	ALL	316 SS[1]
Barium Chloride (Saturated)	93	[200]	ALL	Hast. C	Fatty Acids	199	[390]	ALL	316 SS
	293	[560]	ALL	Inconel®[1]	Ferric Chloride	143	[290]	ALL	Titanium
Barium Hydroxide (Saturated)	104	[220]	50%	Carp. 20		27	[80]	ALL	Hast. C[1]
	199	[390]	ALL	316 SS[1]	Ferric Sulfate	49	[120]	ALL	Carp. 20
Beer	88	[190]		304 SS		88	[190]	10%	316 SS
Benzene (Benzol)	104	[220]	ALL	Carp. 20	Ferrous Sulfate	27	[80]		Titanium
	104	[220]	ALL	304 SS[1]		93	[200]	ALL	304 SS[1]
Benzoic Acid	199	[390]	ALL	Titanium	Formaldehyde	49	[120]	ALL	304 SS
	199	[390]	ALL	304 SS[1]		49-293	[120-560]	50%	304 SS[1]
Black Liquor	238	[460]	ALL	TFE	Formic Acid (Anhydrous)	93	[200]	50%	Carp. 20
	193	[380]	ALL	FEP	Freon (F-11)	204	[400]	ALL	Monel®
	93	[200]	ALL	Carp. 20[1]		204	[400]	ALL	316 SS[1]
Bleach (Active Chlorine)	60	[140]	12.5%	Hast. C	Furfural	199	[390]	ALL	Nickel
Borax	199	[390]	ALL	316 SS		199	[390]	ALL	304 SS[1]
Boric Acid	293	[560]	ALL	Hast. C	Gallic Acid	238	[460]	ALL	TFE
	93	[200]	ALL	Nickel[1]		193	[380]	ALL	FEP
Brine Acid	60	[140]	ALL	Hast. C		199	[390]	ALL	316 SS[1]
	27	[80]	ALL	Brass[1]	Gasoline (Unleaded)	154	[310]	ALL	Hast. C
Bromine (Liquid)	293	[560]	ALL	Tantalum		16	[60]		446 SS
	93	[200]	ALL	Aluminum[1]		171	[340]		Steel[1]
Butane	171	[340]	ALL	Steel		238	[460]		TFE
Butyl Acetate	93	[200]	ALL	Titanium	Gasoline (Refined)	193	[380]		FEP
	188	[370]	ALL	316 SS[1]		88	[190]		Steel[1]
Butyl Alcohol	199	[390]	ALL	316 SS		27	[80]	ALL	Nickel
Butyric Acid	143	[290]	ALL	Carp. 20	Glucose	193	[380]	ALL	316 SS[1]
	199	[390]	ALL	316 SS[1]		27	[80]	ALL	Hast. B
Calcium Bisulfite	93	[200]	ALL	TFE	Glue	60	[140]	ALL	Steel[1]
	193	[380]	ALL	FEP		127	[260]	ALL	304 SS
	171	[340]	ALL	316 SS[1]	Glycerine	88	[190]	50%	Titanium
Calcium Chlorate	238	[460]	ALL	TFE	Hydrobromic Acid	121	[250]	50%	Hast. B[1]
	193	[380]	ALL	FEP		60	[140]	38%	Hast. B
	93	[200]	ALL	316 SS[1]	Hydrochloric Acid	238	[460]	ALL	TFE
Calcium Chloride (Saturated)	171	[340]	ALL	Hast. C	Hydrocyanic Acid	193	[380]	ALL	FEP
	93	[200]	ALL	Carp. 20[1]		171	[340]	ALL	316 SS[1]
Calcium Hydroxide	93	[200]	50%	Hast. C		238	[460]	ALL	TFE
	88	[190]	SAT.	304 SS[1]	Hydroflouric Acid	193	[380]	ALL	FEP
Carbonic Acid	293	[560]	ALL	Carp. 20		93	[200]	ALL	Hast. C[1]
	171	[340]	ALL	316 SS[1]		293	[560]	ALL	Carp. 20
Carbon Dioxide (Dry)	427	[800]	ALL	Brass	Hydrogen Chloride (Gas, Dry)	38	[100]	ALL	304 SS
Carbonated Beverages	100	[212]	ALL	304 SS	Hydrogen Flouride (Dry)	199	[390]	ALL	304 SS[1]
Carbon Disulfide	93	[200]	ALL	Titanium		88	[190]	90%	Hast. C
	199	[390]	ALL	316 SS[1]	Hydrogen Peroxide	71	[160]	ALL	316 SS
Carbon Tetrachloride	93	[200]	ALL	304 SS	Hydrogen Sulfide (Dry)	293	[560]	ALL	316 SS

All materials listed are rated < 2 Mils penetration/year except as noted: [1] = < 20 Mils penetration/year

Teflon® is a registered trademark of E.I. du Pont de Nemours & Co.
Monel® and Inconel® are registered trademarks of Special Metals Corporation.

Corrosive Service Guide to Materials for Sheaths and Thermowells
Refer to A.S.M.E. Boiler Code, Section VIII for allowable stress levels
(Teflon® coated thermowells and/or Teflon® sheaths may be substituted for all corrosive agents listed)

CORROSIVE AGENT	TEMP. °C	TEMP. °F	CONC. %	RECOM. MATERIAL
Iodine	83	[190]	ALL	Hast. C
	21	[70]	ALL	Nickel
Kerosene	238	[460]	ALL	TFE
	193	[380]	ALL	FEP
	171	[340]		Steel[1]
Ketones	32	[90]	ALL	Hast. C
	127	[260]	ALL	316 SS[1]
Lactic Acid	154	[310]	ALL	Titanium
	116	[240]	ALL	Hast. B[1]
Lime (Sulfur)	238	[460]	ALL	TFE
	193	[380]	ALL	FEP
	154	[310]	ALL	316 SS[1]
Linseed Oil	60	[140]	ALL	Carp. 20
	27	[80]	ALL	Steel[1]
Magnesium Chloride	143	[290]	ALL	Nickel
	88	[190]	50%	Carp. 20[1]
Magnesium Hydroxide	93	[200]	ALL	304 SS
Magnesium Sulfate	93	[200]	60%	Nickel
	171	[340]	ALL	316 SS[1]
Mercuric Chloride	143	[290]	ALL	Tantalum
	77	[170]	10%	Hast. C[1]
Mercury	293	[560]	ALL	304 SS
Methyl Chloride (Dry)	171	[340]	ALL	316 SS
Methylene Chloride	93	[200]	ALL	Carp. 20
Milk	93	[200]		304 SS
Naphtha	16	[60]	ALL	446 SS
	116	[240]	ALL	304 SS[1]
Natural Gas	238	[460]		TFE
	193	[380]		FEP
	43	[110]		Steel[1]
Nickel Chloride	93	[200]	80%	Hast. C
Nickel Sulfate	82	[180]	10%	Tantalum
	93	[200]	ALL	304 SS[1]
Nitric Acid	21	[70]	ALL	304 SS
	93	[200]	40%	304 SS
Nitrobenzene	143	[290]	ALL	Carp. 20
	171	[340]	ALL	316 SS[1]
Oleic Acid	138	[280]	ALL	316 SS
Oleum	49	[120]	40%	Hast. C
	116	[240]	ALL	316 SS[1]
Oxalic Acid	93	[200]	ALL	Tantalum
	93	[200]	ALL	Carp. 20[1]
Oxygen	271	[520]	ALL	Tantalum
	16	[60]	ALL	446 SS
	171	[340]	ALL	316 SS[1]
Palmitic Acid	238	[460]	ALL	TFE
	193	[380]	ALL	FEP
	199	[390]	ALL	304 SS[1]
Phenol (Carbolic Acid)	293	[560]	ALL	316 SS
Phosphoric Acid	93	[200]	50-85%	Hast. C
Phosphoric	43	[110]	50-85%	Carp. 20
	171	[340]	ALL	316 SS
Phosphoric Solutions	27	[80]	ALL	Titanium
Picric Acid	21	[70]	ALL	Aluminum
	199	[390]	ALL	316 SS[1]
Potassium Bromide	93	[200]	30%	Titanium
	93	[200]	30%	446 SS
Potassium Carbonate	93	[200]	50%	304 SS
Potassium Chlorate	171	[340]	30%	316 SS
Potassium Hydroxide	93	[200]	50%	Nickel
Potassium Nitrate	171	[340]	80%	Aluminum
	277	[530]	80%	446 SS[1]
Potassium Permanganate	21	[70]	20%	Hast C.
	171	[340]	20%	316 SS[1]
Potassium Sulfate	171	[340]	10%	316 SS
Propane	60	[140]	ALL	446 SS
	27	[80]	ALL	Brass
Pyrogallic Acid	27	[80]	ALL	Copper
	171	[340]	ALL	316 SS[1]
Salicylic Acid	116	[240]	ALL	Hast. C
	171	[340]	ALL	316 SS[1]
Sea Water (Stagnant)				Monel®
Sea Water (Cavitation)				316 SS
Soap Solutions	16	[60]	ALL	446 SS
	54	[130]	ALL	Nickel[1]
Sodium Bicarbonate	171	[340]	20%	316 SS
Sodium Bisulfite	71	[160]	10%	316 SS
	93	[200]	10 - 40%	Carp. 20
Sodium Carbonate	93	[200]	30%	Carp. 20
	293	[560]	10-100%	Hast. B[1]
Sodium Chloride	27	[80]	30%	Nickel
Sodium Flouride	71	[160]	ALL	Monel®
	77	[170]	ALL	Carp. 20[1]
Sodium Hydroxide	104	[220]	ALL	Monel®
	71	[160]	ALL	316 SS[1]
Sodium Nitrate	171	[340]	60%	316 SS
Sodium Nitrite	93	[200]	Saturated	Titanium
	93	[200]	40%	304 SS[1]
Sodium Peroxide	16	[60]	10%	446 SS
	171	[340]	10%	316 SS[1]
Sodium Phosphate Acid	93	[200]	ALL	Titanium
	93	[200]	ALL	304 SS[1]
Sodium Silicate	27	[80]	ALL	446 SS[1]
	166	[330]	ALL	316 SS[1]
Sodium Sulfate	199	[390]	ALL	316 SS
Sodium Sulfide	238	[460]	50%	TFE
	193	[380]	50%	FEP
	93	[200]	50%	316 SS[1]
Sodium Sulfite	93	[200]	10%	304 SS
Sodium Thiosulfate	16	[60]	25%	446 SS
	116	[240]	ALL	316 SS[1]
Steam (Low Pressure)				Inconel
				304 SS[1]
(Medium Pressure)				Nickel
				304 SS[1]
(High Pressure)				316 SS[1]
Sulfur	293	[560]	ALL	304 SS
	871	[1600]	ALL	Alloy 556
Sulfur Chloride (Dry)	32	[90]	ALL	Tantalum
	293	[560]	ALL	Nickel[1]
Sulfur Dioxide (Dry)	49	[120]	ALL	Steel
	293	[560]	ALL	316 SS[1]
Sulfur Trioxide (Dry)	238	[460]	ALL	TFE
	193	[380]	ALL	FEP
	293	[560]	ALL	304 SS[1]
Sulfuric Acid	38	[100]	100%	Carp. 20
	121	[250]	60%	Hast. B
Sulfurous Acid	71	[160]	ALL	Titanium
	177	[350]	ALL	Carp. 20[1]
Tannic Acid	93	[200]	10 - 20%	Titanium
	93	[200]	ALL	304 SS[1]
Tartaric Acid	199	[390]	ALL	304 SS
Titanium Tetrachloride	27	[80]	ALL	Carp. 20
	138	[280]	ALL	Titanium
Toluene (Toluol)	171	[340]	ALL	Steel
	93	[200]	ALL	304 SS
Trichloroacetic Acid	238	[460]	ALL	TFE
	193	[380]	ALL	FEP
	93	[200]	ALL	Hast. C[1]
Trichloroethylene	71	[160]	ALL	Inconel®
Turpentine	88	[190]	ALL	304 SS
Whiskey and Wine			ALL	304 SS
Xylene (Xylol)	88	[190]	ALL	446 SS
Zinc Chloride	82	[180]	to 70%	Titanium
	293	[560]	ALL	Hast. B[1]
Zinc Sulfate	93	[200]	SAT.	316 SS

Reprinted with permission: Scheitzer/Corrosion Resistance Tables 4th Edition, Revised and Expanded. ISBN 0-8247-9590-3, Marcel Dekker, Inc., N.Y. 1995

All materials listed are rated < 2 Mils penetration/year except as noted: [1] = < 20 Mils penetration/year

Teflon® is a registered trademark of E.I. du Pont de Nemours and Company.
Monel® and Inconel® are registered trademarks of Special Metals Corporation.

Thermowell Design Evaluator

Based on calculations in accordance with ASME PTC 19.3 TW

ASME PTC 19.3 TW, the U.S. standard for evaluating the mechanical design of a thermowell used in a broad range of applications, was updated in 2010 to include a greater number of thermowell and process variables. Sometimes referred to as "Wake Frequency Calculation", the revision incorporates new elements for evaluating thermowell constructions that will reduce the chance of vibration and stress damage to the vessel, as well as avoid vibration damage to the temperature sensor it protects.

Please input data regarding your thermowell dimensions, thermowell properties and material/media/process properties in the designated spaces below. We will review the data, process the calculations and contact you with the results. Feel free to contact one of our Product Engineers to go through the process calculations.

Unit of Measure:		
Mounting Type:		
Shank Profile:		
Material:		
Process Connection:		
Unsupported Length (L):		in
Bore Diameter (d):		in
Root Diameter (A):		in
Tip Diameter (B):		in
Minimum Tip Thickness (t):		in
Fillet Radius at Support Plane (b):		in
Fillet Radius at Base of Step (b_s):		in
Reduced-Diameter Shank Length (L_s):		in
Damping Factor (ζ):		
Shielded Length of T-Well (L_o):		in
Max. Fluid Velocity (V):		ft/s
Fluid Density (ρ)		lb/ft^3
Max. Operating Temperature (T):		F
Max. Operating Pressure (P):		psig
Dynamic Viscosity (μ):		cP (1 centipoise = mPa*s)
Tag/Reference #:		

1. **Input your data online**
2. **We review and process the calculations**
3. **We will contact you with results**
4. **(*Optional*) Contact one of our Product Engineers to go through process calculation questions**

Find this page at: www.Pyromation.com/TechInfo/WakeFreq.aspx

Pyromation makes no claims regarding performance or safety based on the calculations provided. The results communicated are based on the ASME PTC 19.3 TW design standard for reliable service of tapererd, straight and stepped-shank thermowells in a broad range of applicatiosn. The user assumes full responsbility for installation, application and operation of the product.

Typical Thermowell Design Evaluator Report

THIS IS A RESPONSE EXAMPLE ONLY - DO NOT USE DATA FOR ANY OTHER PURPOSE

pyromation inc
beyond measure

5211 Industrial Road, Fort Wayne, IN 46825

Straight or Tapered Thermowell
Wake Frequency Evaluation Results

per PTC 19.3-TW 2010

Date:	8/3/2011
Customer Name:	Dave Myers
Company/Org. Name:	Pyromation, Inc
E-mail Address:	dmyers@pyromation.com
Tag Number:	TW-100

OUTPUTS

Frequency Condition	PASS
Frequency Ratio	**0.073**
Steady State Stress Limit	PASS
Dynamic Stress Limit	PASS
Pressure Limit	PASS

INPUTS

Mounting Type: Threaded
Material type: 316SS

Dimensions:

Length	L=	6.000	in	0.152 m
Root diameter	A=	1.063	in	0.027 m
Tip diameter	B=	0.625	in	0.016 m
Bore diameter	d=	0.260	in	0.007 m
Tip thickness	*t*=	0.188	in	0.005 m
Fillet radius at base	*b*=	0.178	in	0.005 m
Damping Factor	ζ=	0.0005		
Shielded length	L_0=	0.000	in	0.000 m
Sensor density	ρ_s=	2700	kg/m^3	

T-Well Material Properties

Allowable stress	*S*=	18000	psi	1.24E+08 Pa
Fatigue limit	S_f=	5400	psi	3.72E+07 Pa
Modulus at temperature	*E*=	25900000	lbf/in^2	1.79E+11 Pa
Density of t-well material	ρ_m=	0.290	lbf/in^3	8026.9 kg/m^3

Fluid Properties:

Fluid velocity	*V*=	15.50	ft/s	4.72 m/s
Fluid density	ρ=	4.300	lb/ft^3	68.9 kg/m^3
Fluid temperature	*T*=	450.0	℉	232.2 ℃
Gauge pressure	*P*=	150.0	psig	1034214.0 Pa
Viscosity	μ=	0.019	cp	

Summary/ Suggestions:

*Pyromation makes no claims regarding performance or safety based on the calculations provided. The results communicated are based on the ASME PTC 19.3 TW-2010 design standard for reliable service of tapered, straight and stepped-shank thermowells in a broad range of applications. The user assumes full responsibility for installation, application and operation of the product.

Complete Manufacturer Capabilities & Services
















pyromation inc.
beyond measure

// SPEED, SERVICE, SOLUTIONS... BEYOND MEASURE®

Operating since 1962, Pyromation is the premier temperature sensor manufacturer in North America. From RTDs and thermocouples to thermowells, connection heads, accessories and complete assemblies, Pyromation can make the right temperature sensor for your process and deliver it faster than anyone in the industry. A broad product line, industry experience, friendly customer service and quick delivery make Pyromation the best choice for your temperature measurement applications. For more information, please call us or visit www.pyromation.com.

pyromation® inc.
beyond measure

Adaptive Industrial Solutions
sales@adaptiveind.com | (877) 818-5009

TW-1014

Thermowells

Standard and Custom-Drilled Bar-Stock Designs

Speed, Service, Solutions... Beyond Measure®

pyromation® inc.
beyond measure