MUD GAUGE DIAPHRAGM TYPE



BRMG
Mud Gauge Diaphragm Type

BRMG

FEATURES:

- Pressure range from 5K PSI to 15K PSI (345 to 1,034 BAR)
- Socket and case welded for high vibration and corrosive service
- Fixed pointer and movable dial
- 4″ glycerine filled dial
- Weather proof/anti-corrosive gun metal casting
- Easy-to-read analog display

APPLICATIONS:

- Mud pump pressure
- Stand pipe pressure
- Oil and gas well head pressures

SPECIFICATIONS:

- **Bourdon tube**: 316 stainless steel
- **Movement**: 304 stainless steel
- **Diaphragm**: 316L stainless steel
- **Casing**: Anti-corrosion treated carbon steel
- **Process Connection**: Bottom mount 2″ NPT
- **Accuracy**: 3-2-3% (ASME B40.1 Grade B)
- **Static Accuracy**: 2.5% FSO
- **Pressure Ranges**: 0 to 10K PSI thru 0 to 15K PSI (690 thru 1,034 BAR)
- **Dial**: 4″ Glycerine filled plexiglass
- **Neoprene rubber pad** for mud protection

BR5SL-G-015
REV-B

© 2015 Blue Ribbon Corp. **Adaptive Industrial Solutions**
sales@adaptiveind.com | (877) 818-5009

MUD GAUGE DIAPHRAGM TYPE

DIMENSIONAL DRAWING

All dimensions are in inches (mm)

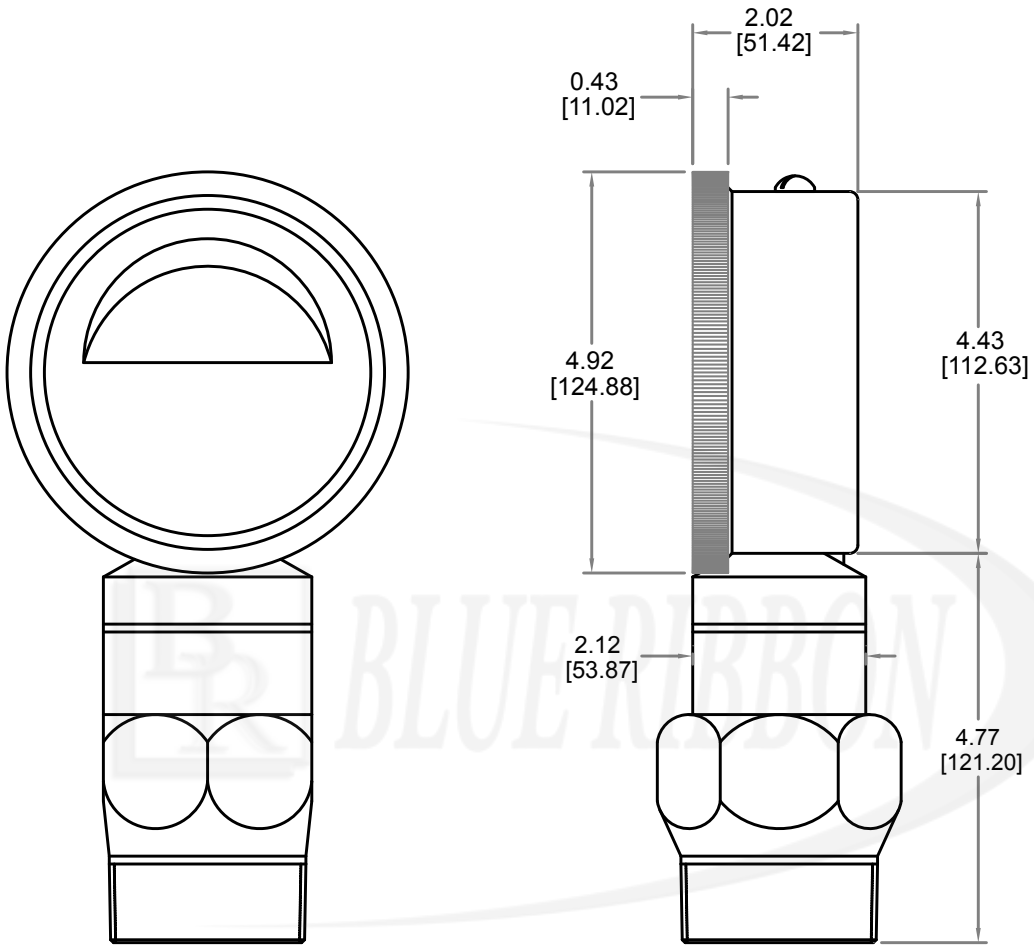

All specifications are for reference purposes only. In the interests of continuous product improvement, all specifications are subject to change without notice. Please contact Blue Ribbon Corporation for assistance with your application.

© 2015 Blue Ribbon Corp. **Adaptive Industrial Solutions**
sales@adaptiveind.com | (877) 818-5009