# DUAL CHAMBER LEVEL SYSTEM

### Multiple Chamber Configurations
- Standard and Custom Chamber Styles
- Left or Right Hand Mounted Secondary Chambers
- 2, 3, or Multiple Process Connections
- Optional Tuning Fork Branches

### Secondary Chamber Sizes for Application Compatibility
- Schedule 10 Standard: 1½, 2, 2½, 3 and 4 inch Sizes
- Schedule 10, 40, or 80
- Welded or Seamless

### Assortment of Chamber Materials
- Teflon “S” Coated Chambers for Slip Resistance
- 304SS, 316SS, Hastelloy C-276, Alloy 20, and other Non-magnetic Metals

### Chamber Styles for Process Connections
- Top-Bottom, Side-Side, Side-Bottom, and Top-Side
- Custom for Every Installation

### Connection Sizes and Ratings
- Carbon Steel Flanges on Stainless Steel Chambers
- 1/2 inch Threaded Half Couplings to 3 inch 2500 lb flanges and more
- ANSI, DIN, and Other Flanges
- Designed for Specified Connections

### Highly Visible Indicators
- Fluorescent and High Temperature Shuttle Indicators
- Yellow/Black or Red/White Magnetic Bargraphs
- Standard and Wide Bargraphs

### Custom Rulers
- Running Inches
- English Units (Foot and Inch)
- Metric Units (Meter and Centimeter)
- Negative to Positive Values
- Percent, Volume, or Other Custom Units

### Custom Lengths
- Center to Center Lengths up to 40 Feet
- Full Measurement Range
- Completely Customized Systems

### Accessories
- Magnetostrictive Transmitters
- Magnetically Actuated Point Level Switches
- High Temperature Insulation Blankets
- Cryogenic Insulation
- Vent, Drain, and Isolation Valves
- Electric Heat Tracing
- Steam Tracing



### Multiple Redundant Technologies
- Guided Wave Radar
- Capacitance Level Transmitter
- Tuning Fork Level Switch
- JLT- 6000 Direct Insertion Magnetostrictive Level Transmitter
  - Accuracy 0.01% Full Scale, LCD Display, 4-20mA with HART
  - Field-Replaceable Electronics Module, Sensor Wire Assembly
  - No Need to Consider Dielectric Constant
- Other Measurement Level Technologies

Compact Close Coupled Chambers



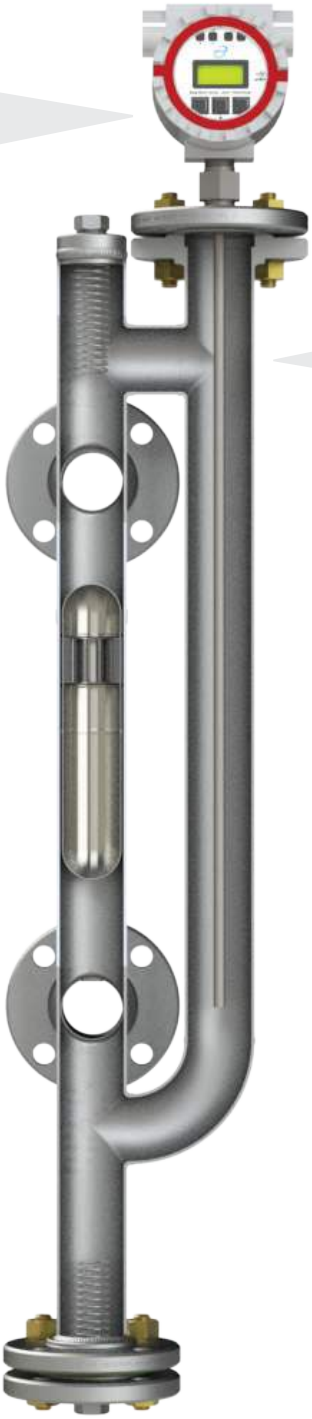

Extruded Outlet Connection

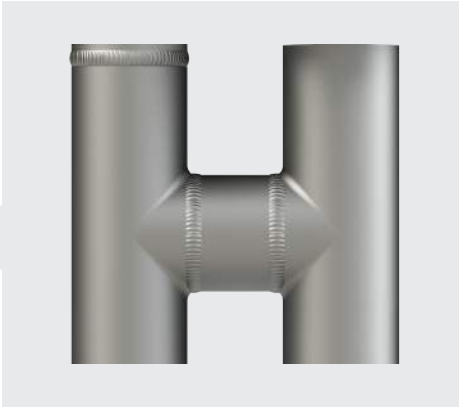

Dual Chamber Compact Footprint



### Advantages of Dual Chambers

- Cuts out need for coaxial probes
- A single probe can be easily removed from the chamber for maintenance and cleaning
- Putting a Guided Wave Radar and a float in a single chamber requires larger pipe and flange sizes and a baffled plate between the float and the GWR coaxial probe

### Disadvantages of a Single Chamber System

- A magnetic field orientation not optimal for instrument installation
- Radar interference due to the baffled plate
- Float obstruction due to an extra wall in the chamber
- Mandatory use of coaxial probe shields which are susceptible to blockage and fouling leading to incorrect measurements
- Increased cost and weight of the system
- Remote mounting of GWR electronics when top connections to the system are necessary

### Compact Dual Chamber System

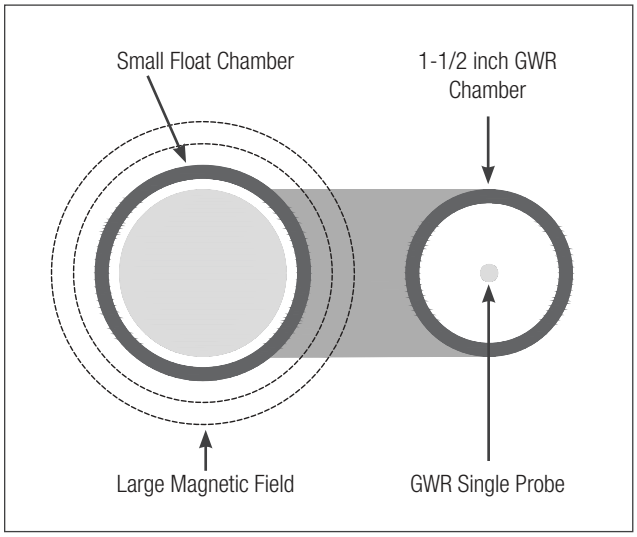


### Oversized Single Chamber System

