DUAL INPUT PUMP CONTROLLER

MODEL BD306



Models BD306
Pump Controller

OVERVIEW:

The Model BD306 Dual Input Pump Controller from Blue Ribbon Corporation offers high-reliability monitoring and control when used with the Birdcage® submersible level transmitter. Unit features dual input process control with Math Functions, Programmable Display & Function Keys, RS-242, RS-485 and Modbus® RTU Serial Communication Protocol, making it suitable for use in a variety of industrial applications.

FEATURES:

- Dual Input Process Controller with Math Functions
- 0-20 mA, 4-20 mA, 0-5 V, 1-5 V, and ±10V Inputs
- Large Dual-Line 6-Digit Display, 0.60" & 0.46"
- NEMA 4X, IP65 Front
- Universal 85-265 VAC, or12/24 VDC Input Power
- Programmable Display & Function Keys
- 32-Point, Square Root, or Exponential Linearization
- Multi-Pump Alternation Control
- USB, RS-232, RS-485 and Modbus® RTU Serial Communication Protocol
- Free BULLDOG Pro Software for Operation, Monitoring, and Programming
- Standard1/8 DIN (45mm x 92mm)

FIELD OPTIONS:

- 4 Relays + Isolated 4-20 mA Output
- External 4-Relay & Digital I/O Expansion Modules
- Sunlight Readable Display Models

BR5SL-PC-004
REV-A

© 2015 Blue Ribbon Corp.
Adaptive Industrial Solutions
sales@adaptiveind.com | (877) 818-5009

DIMENSIONAL DRAWING

All dimensions are in inches (mm)

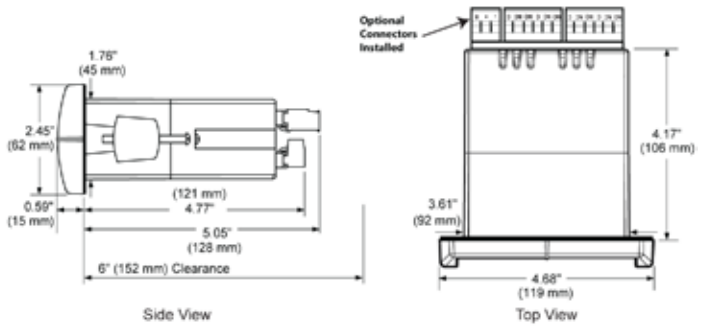

Notes:
1. Panel cutout required: 1.772" x 3.622" (45 mm x 92 mm)
2. Panel thickness: 0.040 - 0.250" (1.0 mm - 6.4 mm)
3. Mounting brackets lock in place for easy mounting
4. Clearance: Allow 6" (152 mm) behind the panel

CONNECTION DIAGRAM:

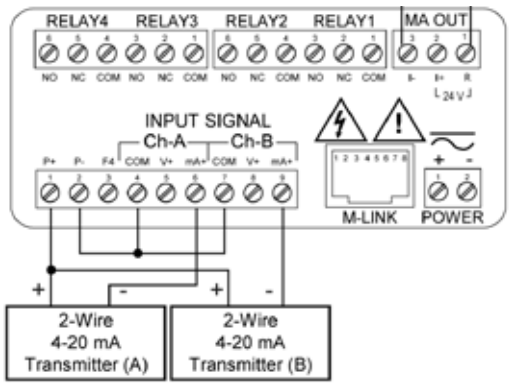

NEMA 4X FIELD ENCLOSURES:

Thermoplastic NEMA 4X enclosures are constructed for indoor or outdoor use.



BD281

ACCESSORIES:

MODEL	DESCRIPTION
BDDRMK	DIN RAIL MOUNTING KIT FOR TWO EXPANSION MODULES
BDXM	4-RELAY EXPANSION MODULE
BDIO	4 DIGITAL INPUTS & 4 DIGITAL OUTPUTS MODULE
BDCCC	METER COPY CABLE
BDUSBSA	USB SERIAL ADAPTER
BD281	1/8 DIN ENCLOSURE

All specifications are for reference purposes only. In the interests of continuous product improvement, all specifications are subject to change without notice. Please contact Blue Ribbon Corporation for assistance with your application.

© 2015 Blue Ribbon Corp.
Adaptive Industrial Solutions
sales@adaptiveind.com | (877) 818-5009