Intelligent Silo and Tank Level Transmitter



20 SERIES

- Ranges from 16 inH_2O to 58 psig (1,600 inH_2O)
- Hart® protocol output available
- 316 Stainless Steel wetted parts
- Strong flush diaphragm with minimal fill volume
- Can be cleaned-in-place (CIP) or steamed-in-place (SIP)
- Meets the requirements of 3-A

HART COMMUNICATION PROTOCOL

APPLICATIONS

- Food & beverage
- Dairy
- Chemical processing
- Pharmaceutical

FEATURES & BENEFITS

- All Stainless Steel housing
- Easy programming and range adjustment without test pressure via on-board display
- Accuracy 0.1% of adjusted span
- 10:1 turn down
- Active temperature compensation
- Hart® protocol optional
- 360° rotatable display

SPECIFICATIONS

Output signals	4 mA to 20 mA 2-wire, 4 mA to 20 mA 2-wire and Hart® signal
Pressure ranges	16 inH_2O to 58 psig (1,600 inH_2O)
Accuracy	0.1% of adjusted span
Stability	<0.1%/year
Adjustment	By 3 push buttons on display or optional Hart® signal
Response time	<150 ms
Service life	>10 years
Temperature ranges	-4 °F to 212 °F (-20 °C to 100 °C); 293 °F (145 °C) for 45 min.
Power requirement*	12 Vdc to 36 Vdc
Measuring element	316 Stainless Steel (Hastelloy C, Tantalum or Goldplated optional)
Connection	316 Stainless Steel
Housing material	304 Stainless Steel
Environmental rating	IP66 (IP68 optional)
Electrical protection	IP66 (NEMA 4X), IP68 (NEMA 6) optional
Weight	Approximately 3.3 lb. (Depending on process connection)

* Unregulated

⚠ **WARNING:** This product can expose you to chemicals including Lead and Nickel, which are known to the State of California to cause cancer and birth defects or other reproductive harm. For more information go to www.P65Warnings.ca.gov

ORDERING INFORMATION				
SERIES	**204**			
PROCESS CONNECTIONS	**90**	E&H Universal adapter short version	**95**	King Gage Standard - 6"
	91	E&H Universal adapter long version	**96**	King Gage Long - 8"
	92	Anderson Negele Type SL Short	**97**	Rosemount Tank Spud - 2"
	93	Anderson Negele Type SL Long - 6"	**98**	Rosemount Tank Spud - 6"
	94	King Gage Short	**99**	Tank Mate Medium - 6"
PRESSURE RANGES (Adjustable)*	**16/160 inH$_2$O**	16 inH$_2$O to 160 inH$_2$O (0.6 psig to 6 psig)	**6/58 psig**	6 psig to 58 psig (160 inH$_2$O to 1,600 inH$_2$O)
	47/470 inH$_2$O	47 inH$_2$O to to 470 inH$_2$O (1.7 psig to 17 psig)		
ACCURACIES	**1**	0.1% of adjusted span		
OUTPUT SIGNALS	**1**	4 mA to 20 mA, 2-wire	**43**	4 mA to 20 mA, 2-wire and Hart® signal
ELECTRICAL CONNECTIONS	**25**	M12 x 1 (4-pin)	**71**	PG9 Cable Gland
	28	1/2" NPT Female		
OPTIONS	**TC**	Transparent Cover (for display)		

Please consult your local NOSHOK Distributor or NOSHOK, Inc. for availability and delivery information.

*Other ranges available, consult factory

EXAMPLE

204 – 90 – 16/160 inH2O – 1 – 43 – 71 – TC

Series ..... 20 Series
Process connection ..... E&H Universal adapter short version
Pressure range ..... 16 inH$_2$O to 160 inH$_2$O
Accuracy ..... 0.1% of span
Output signal ..... 4 mA to 20 mA, 2-wire and Hart® signal
Electrical connection ..... PG9 Cable Gland
Option ..... Transparent Cover

M12 x 1 (4-PIN) WIRING

1	Brown	V+
2	White	V-
3	Blue	Not used
4	Black	Not used

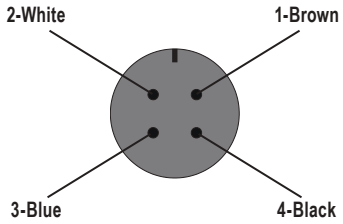

Dimensions

204-91 (E&H Universal adapter)

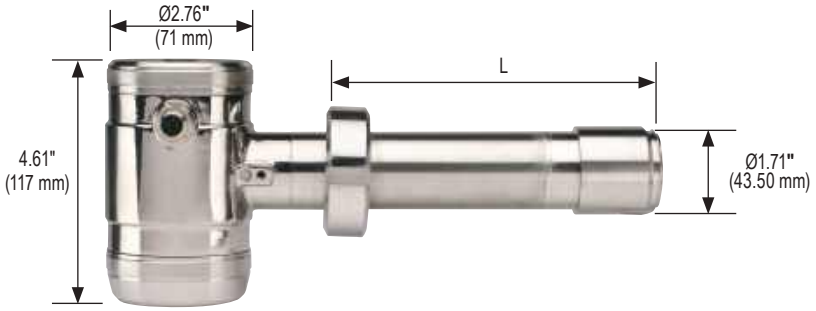

	L
Short	2.16" (54.86 mm)
Long	5.93" (150.50 mm)

204-93 (Anderson Negele Type SL)



	L
Short	2.05" (52.0 mm)
Long	6.36" (161.50 mm)

204-95 (King Gage)

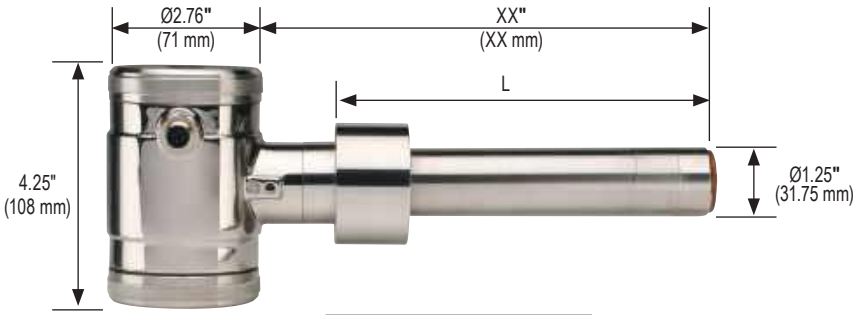

	L
Short	2.19" (55.63 mm)
Standard	6.62" (168.15 mm)
Long	8.81" (223.77 mm)

204-98 (Rosemount Tank Spud)

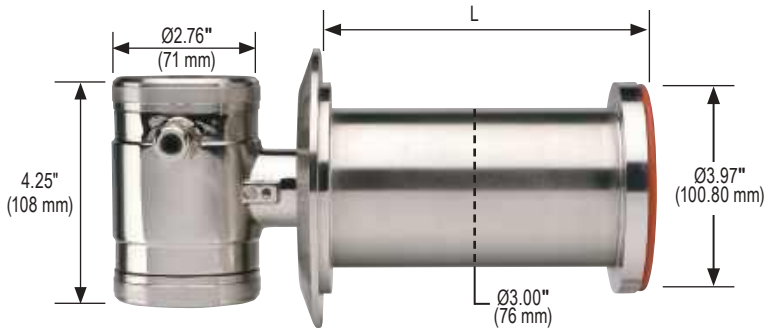

	L
Short	2.11" (53.58 mm)
Long	6.11" (155.19 mm)

204-99 (Tank Mate)

