Installation and Operating Instructions

Spring-Loaded MgO Thermocouple/ Thermowell Assemblies with Connection Heads (GP04, XP04, XP06)

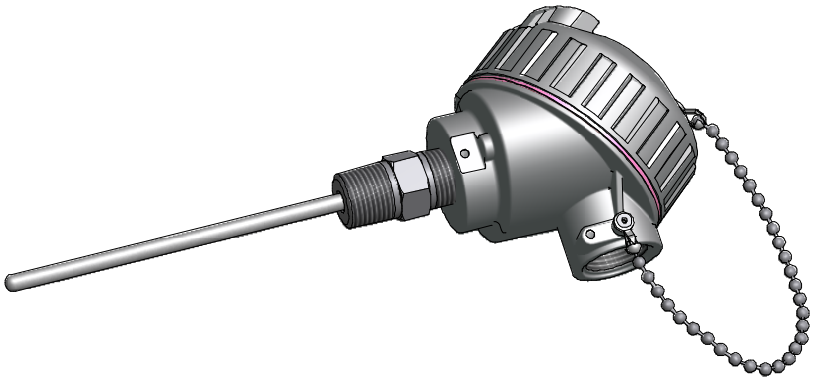

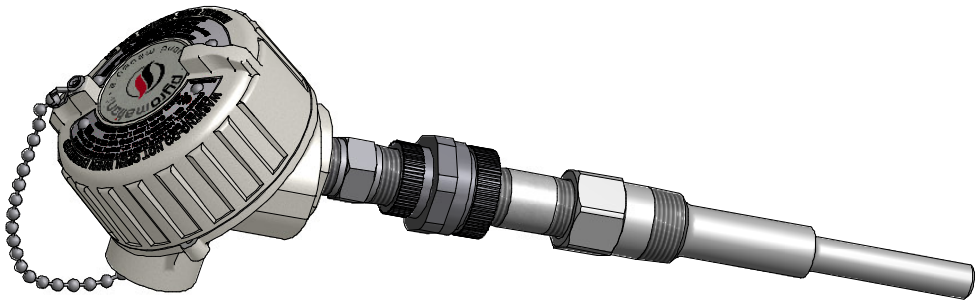

Speed, Service, Solutions... Beyond Measure®

pyromation® inc. beyond measure

IOIGP04
08/14

Choosing the right temperature sensor for each application is critical, but selection of the correct sensor does not guarantee flawless function and reliable results if the unit(s) is not installed and operated properly. The following instructions will help ensure that the sensor(s) perform as expected.

Notice: The information provided in this document constitutes recommended procedures based on experience with stated equipment and materials in specific conditions. This information does not guarantee satisfactory results. These installation and operating instructions are recommendations only, and Pyromation assumes no liability for any resulting outcomes. Pyromation sales and engineering personnel are available to assist in determining the best sensor assemblies for each application, however, the user is obligated to ultimately verify the suitability of Pyromation's products and the use of these procedures for each purpose.

Pyromation cannot be held responsible for damages caused by non-compliance with the recommended instructions or the improper use of the devices described within this document.

Safety Warning: The devices and procedures referenced in this document incorporate the use of electricity at potentially lethal levels. Care should be taken to protect all personnel involved with installation and operation of the devices mentioned in this document. Follow all safety instructions and heed all warnings.

Symbols:

-  **Danger-Electric Hazard** – risk to health/life
-  **Warning** – Dangerous situation presents risk of injury/death
-  **Caution** – Possible dangerous situation presents risk of minor injury.

© 2014 Pyromation, Inc.

Phone (260) 484-2580 • FAX (260) 482-6805 or (800) 837-6805 • www.pyromation.com

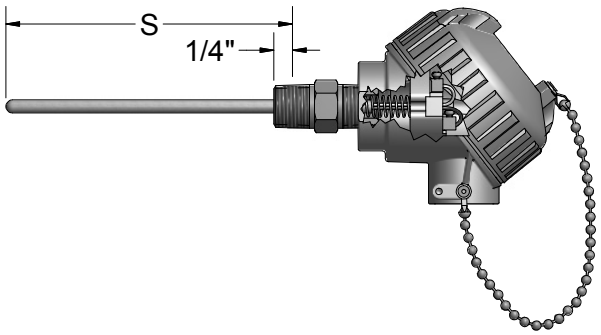

Device(s) and System: The Pyromation Spring-Loaded MgO Thermocouple assemblies covered in this document (series GP04, XP04 and XP06) are sensors built to measure temperature in a variety of process applications. The XP04 and XP06 series assemblies are FM and CSA approved for use in hazardous locations within the U.S. and Canada. The sensor assemblies should be handled with care to avoid causing any damage that might impair their ability to function properly. These sensors are designed with a probe that is spring-loaded, allowing for ¼" to ½" compression when inserted into a pressurized protective vessel called a thermowell. Thermowell construction is related to the desired immersion length as well as temperature, pressure, chemical/physical composition and flow speed of the medium being measured.

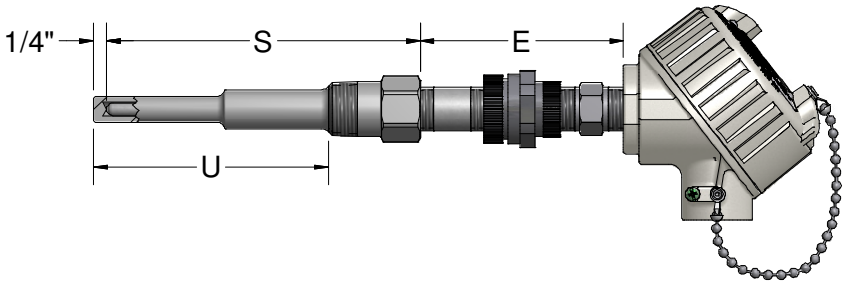

Personnel/Qualifications: The commissioning, installation and maintenance of devices described in this document must be handled by personnel authorized by the plant operator/organization. These personnel must read and understand the product specs and installation/maintenance instructions prior to taking any action. Installers and users must observe the applicable regulations/codes required by their particular industry and country with regard to installation, function tests, repairs and maintenance of electrical devices.

© 2014 Pyromation, Inc.

Phone (260) 484-2580 • FAX (260) 482-6805 or (800) 837-6805 • www.pyromation.com

Installation Instructions:

Consult plant schematics to understand the temperature measurement system's connection to the facility and total overall operation.

Make sure that the ambient temperature range in the area of the application is appropriate for the sensor being installed – which are the limits related to the sensor wire termination and associated enclosure.

Disconnect, isolate or cut power from the area where targeted installation is to take place.

Ensure that process piping or container is clear of material at the area of installation and that no pressure is present.

Check to make sure the sensor assembly(s) have suffered no damage in shipment and are complete.

Check to make sure the probe of the MgO spring-loaded thermocouple will compress ¼" – ½" to ensure contact with the bottom of the thermowell.

Locate the port in the wall of the process pipe, tank, furnace or container in which the thermowell/assembly should be installed.

There are generally four types of thermowell connections:

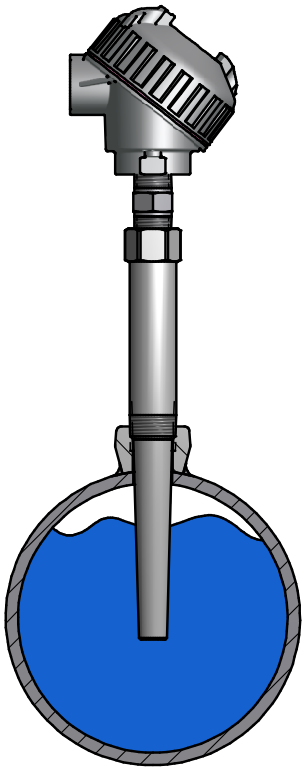

Threaded Connection

- Check to make sure the sensor assembly's threads match the threads of the process fitting (e.g. ½", ¾", NPT thread, straight thread, metric thread) and that the thermowell material matches the process piping/container material (to avoid galvanic reactions between dissimilar materials, which can lead to accelerated corrosion).
- Make sure the process fitting meets the maximum specified process pressure requirements.
- Seal the extension nipples with TFE tape.
- If the conduit port of the connection head of the sensor assembly must match up to rigid conduit pipe, make sure the unit has a union fitting, which will allow for adjustments (not necessary if using flexible conduit).
- When installing a threaded thermowell sensor assembly, connect the unit to the process fitting. Tighten to fitting using recommended torque (e.g. 54 ft-lbs for ½" NPT; 78 ft.-lbs. for ¾" NPT or 1.5 – 3.0 turns past finger tight).

© 2014 Pyromation, Inc.

Phone (260) 484-2580 • FAX (260) 482-6805 or (800) 837-6805 • www.pyromation.com

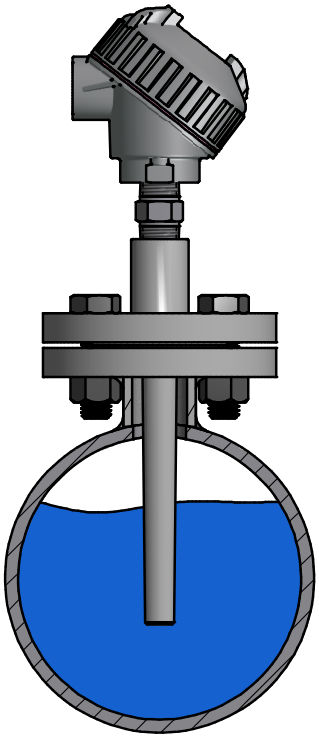

Flanged Connection

- Make sure the process fitting meets the maximum specified process pressure requirements.
- If the conduit port of the connection head of the sensor assembly must match up to rigid conduit pipe, make sure the unit has a union fitting, which will allow for adjustments (not necessary if using flexible conduit).
- When installing a flanged thermowell sensor assembly, slip the thermowell part of the unit into the affixed flange port, align holes and tighten bolts. Make sure applicable gasket or O-ring is installed where required.

Welded Connection

- Check to make sure the thermowell material matches the process piping/container material (to avoid galvanic reactions between dissimilar materials, which can lead to accelerated corrosion).
- Remove the sensor assembly from the thermowell.
- Weld the thermowell into place and allow to cool.
- Seal the sensor assembly extension nipples with TFE tape.
- Re-insert the sensor assembly into the thermowell. Slip the probe inside the vessel, ensuring that the tip of the spring-loaded assembly touches the inside base when the unit has been threaded together.
- If the conduit port of the connection head of the sensor assembly must match up to rigid conduit pipe, make sure the unit has a union fitting, which will allow for adjustments (not necessary if using flexible conduit).

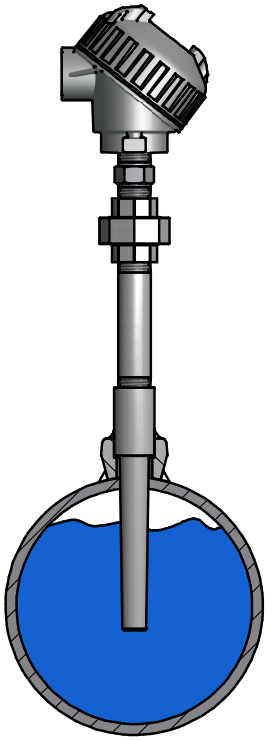

© 2014 Pyromation, Inc.

Phone (260) 484-2580 • FAX (260) 482-6805 or (800) 837-6805 • www.pyromation.com

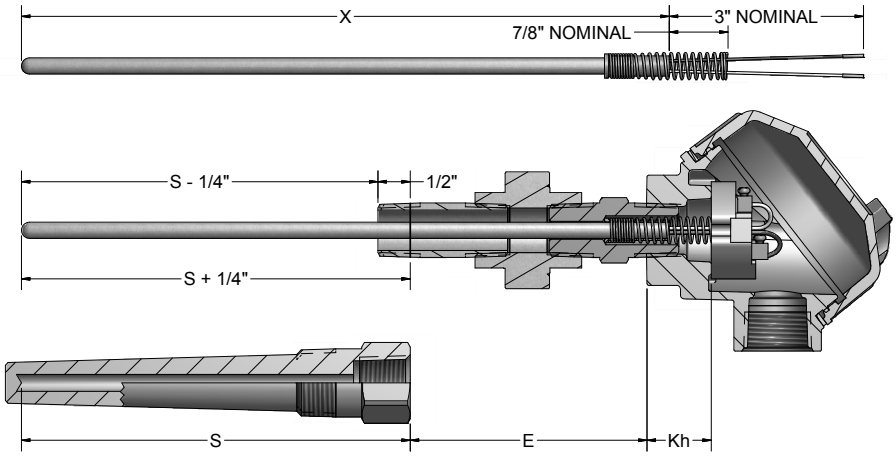

Sensor Assembly inserted into existing thermowell

- Check to make sure the sensor assembly's threads match the threads of the process fitting (e.g. ½", ¾", NPT thread, straight thread, metric thread).
- Make sure the process fitting meets the maximum specified process pressure requirements.
- Seal the extension nipples with TFE tape.
- If the conduit port of the connection head of the sensor assembly must match up to rigid conduit pipe, make sure the unit has a union fitting, which will allow for adjustments (not necessary if using flexible conduit).
- If a thermowell is already installed, slip the probe inside the vessel, ensuring that the tip of the spring-loaded assembly touches the inside base when the unit has been threaded together.

Once the sensor is secure in the process fitting and the connection head or transmitter housing is in the desired position, the conduit or flex cable can be connected to the conduit opening in the enclosure.

Remove the connection head cap, transmitter backplate or faceplate to gain access to the wire connection terminals. The sensor wires should already be securely connected to the terminals:

If the sensor assembly is wired with a terminal block in the connection head, it is necessary to pull thermocouple extension wire through (must be the same calibration as the thermocouple) the conduit or flex cable into the enclosure and connect to the designated terminals (see wiring diagram).

If the sensor assembly is wired with a temperature transmitter in a connection head or other housing, it is necessary to pull the two copper wires through the conduit or flex cable into the enclosure and connect to the designated terminals (see wiring diagram).

© 2014 Pyromation, Inc.

Phone (260) 484-2580 • FAX (260) 482-6805 or (800) 837-6805 • www.pyromation.com

Thermocouple Wiring Diagram

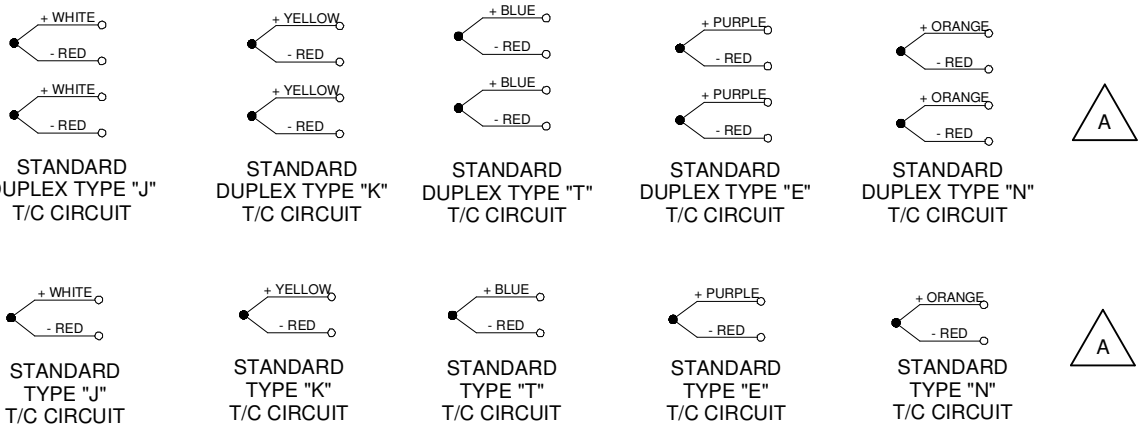

The installer will need to strip back part the insulation on the wire when connecting to either block or transmitter terminals. Generally, 1.5 to 2.0 inches should be removed from the outer jacket and .25 inch removed from the individual conductors. When stripping the wire, be careful not to cut into the conductors. Cuts in the conductors can produce stress points that are prone to breakage, which could interrupt the signal communication.

A green colored ground screw is located on the connection head and should be connected to the bare wire if grounding is required by applicable electrical codes.

When wiring connection has been completed, be sure the plate or cap is secured to prevent moisture, dust or other elements from entering the enclosure.

Restore power and verify that the sensor is functioning properly.

Repeat steps for each sensor installation.

Questions? Contact the local distributor or representative with any questions, or get in touch with Pyromation if no local service is available. Company contact information is shown at the bottom of each document page or on the company Web site – www.pyromation.com.

© 2014 Pyromation, Inc.

Phone (260) 484-2580 • FAX (260) 482-6805 or (800) 837-6805 • www.pyromation.com

// SPEED, SERVICE, SOLUTIONS... BEYOND MEASURE®

Operating since 1962, Pyromation is the premier temperature sensor manufacturer in North America. From RTDs and thermocouples to thermowells, connection heads, accessories, and complete assemblies, Pyromation can make the right temperature sensor for your process and deliver it faster than anyone in the industry. A broad product line, industry experience, friendly customer service, and quick delivery make Pyromation the best choice for your temperature measurement applications. For more information, please call us or visit www.pyromation.com.

pyromation® inc.
beyond measure

5211 Industrial Road // Fort Wayne, IN 46825, USA
260.484.2580 // www.pyromation.com