Performance Series pH/ORP Sensors

Industrial Process Control & Monitoring

- **Patented Axial Ion Path® Reference**
- **Specialized pH Glass Formulations and ORP Electrodes**
- **Proprietary Low-Noise, High Temperature Signal Cable**
- **Sensors are Compatible with Most Major Manufacturer's Analyzers**
- **Industrial Mounting Options**
- **Industry Leading Pressure and Temperature Ratings**
- **NEW O-ring and Seal Options: Viton® Extreme™, EPDM & FFKM**

Axial Ion Path® Reference
- Patented design increases sensor life, accuracy and reliability
- High resistance to poison: Reduced calibration offset error
- Large surface area reference junction eliminates plugging issues
- Eliminates error due to fluctuating pressure
- No exotic gel or polymer electrolyte which may be incompatible with the process

Specialized Electrode Glass Formulations & Styles
- High accuracy and lifespan in strong acids and bases
- Coating resistant glass electrode reduces fouling
- Silica resistant option to eliminate bonding to glass
- Ruggedized hemispherical and flat glass options resist breaking

Proprietary Sensor Signal Cable
- Designed to eliminate measurement fluctuation due to noise
- Chemical and UV resistant
- Highest temperature rating (130°C)

Compatibility with Most Major Vendor's Electronics
- Proven with major vendors of pH analyzers (Rosemount, ABB, Foxboro, E&H, Mettler Toledo, GLI/Hach, Knick)
- Get higher accuracy and longer life in your application by upgrading the sensor

Industrial Mounting Options
- Mounting fittings for sample line installations
- Submersible cleaners and scrubbers
- Ball Valve "Hot Tap" retraction solutions
- Variety of materials for corrosive applications

Highest Pressure & Temperature Ratings
- In-line sensor installation to 2,500 PSIG (172 BAR)
- Quick Change "Nut Lock" to 300 PSIG (20 BAR)
- Retractable "Hot Tap" to 300 PSIG (20 BAR)
- Process temperature to 266°F (130°C)

Performance Series pH/ORP Sensors

Performance Series

The Barben Analytical Performance Series products are 3rd generation combination pH/ORP electrodes targeted at harsh, industrial measurement applications. High pressures, strong chemicals, and elevated temperatures typically shorten the lifespan of conventional double-junction pH probes. In these applications the Performance Series sensor offers extended sensor lifespan, as well as decreased drift, and longer calibration intervals.

Each sensor is manufactured with our patented Axial Ion Path® reference technology, proprietary Low-Noise & High-Temp Signal Cable along with proprietary ruggedized, high temp and coat resistant glass formulations.

A wide selection of sensor body styles and process fittings in a variety of corrosion resistant materials allow direct replacement of short-lived OEM pH/ORP sensors. Barben Performance Series sensors are compatible with all major manufacturers of pH analyzers and transmitters. Upgrade your analytical measurement without the hassle and expense of replacing costly field instruments.

Typical Process Applications

Many industrial processes shorten pH/ORP sensor lifespan. Barben Performance Series sensors excel in applications that may have the following characteristics:

- **H_2S (Sulfides)[1]**
- **High Ion-Strength Solutions**
- **Ammonia**
- **Heavy Metals [Ag, Pb, Hg][2]**
- **Strong Caustics**
- **Strong Acids**
- **High Cyclic Pressures**
- **High Temperature**
- **Proteins[1]**
- **Organics**
- **Mercaptans[1]**
- **Cyanides[1]**
- **Iodides[1]**
- **Bromines**

NOTES

1. *Chemicals that react with Ag^+ (Silver) and restrict traditional reference junction designs*
2. *Heavy metals which react with Cl^- (Chloride) and reduce the voltage potential of the sensor.*

Standard Sensor Technology

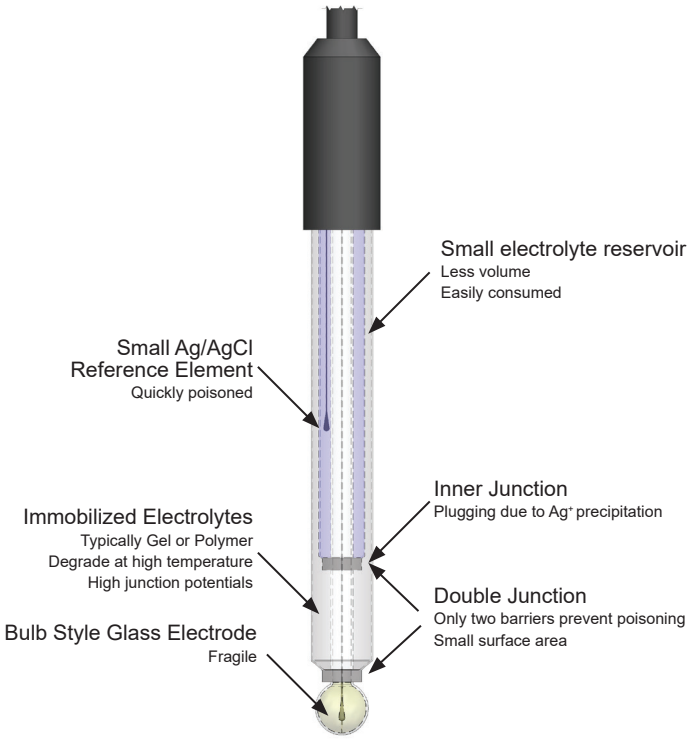

Figure 1

Barben Performance Series Sensor

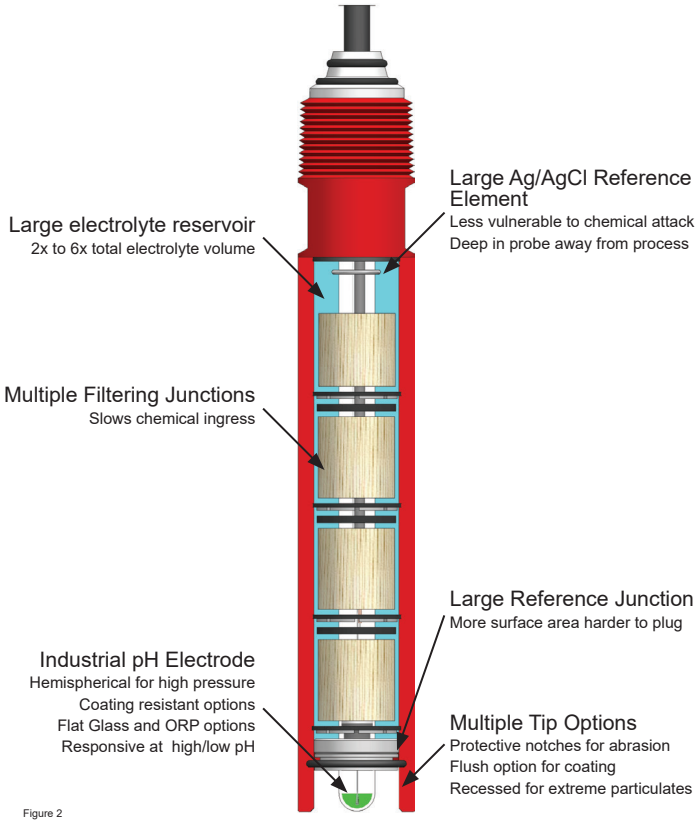

Figure 2

Industry Leading Reference Technology Axial Ion Path®

In 90% of industrial applications the reference cell is the cause of sensor failure. The typical industry standard "double junction" pH sensor (fig. 1) uses reference technology designed to minimize mixing of internal electrolyte and process liquid. This simplistic design is achieved by dividing the reference cell into two chambers, each protected with a porous junction. Once process liquid penetrates each junction, poisoning of the sensor may occur or the measurement signal may be impeded by plugging of the porous junction.

The Barben sensor (fig. 2) has a unique, patented reference cell design which combats these common problems.

Performance Series sensor's reference technology utilizes multiple innovations within the reference cell to greatly extend sensor life.

- Multiple annular wood filtering junctions
- Axial Ion Path® Communication Disks
- Large volume of electrolyte
- Large surface area Ag/AgCl reference element
- Teflon junction

Each sensor uses multiple "solid-state" annular wood filtering junctions. Wood's natural cellular makeup greatly slows the ingress of process liquid into the sensor. Each wood filtering junction chamber is separated by patented Axial Ion Path® communication disks. The communication disk seals each chamber while providing multiple electrolyte paths thus ensuring a reliable measurement signal.

Barben Performance Series sensors contain a much higher volume of KCl electrolyte than typically found in double junction sensors. More electrolyte provides on-going insurance against the leaching effects of fluctuating process pressure and temperature.

An oversized Ag/AgCl reference element is located near the rear of the sensor. This innovation serves two purposes. Distancing the reference element far from the sensor tip keeps it away from process chemicals. Over time, if chemicals such as sulfides were to penetrate within the sensor, then the large reference element is capable of withstanding long-term poisoning while maintaining a stable measurement.

As a final preventative measure, a porous Teflon insert placed at the tip of the sensor provides a large surface area to prevent plugging. Teflon also serves as a great initial barrier to chemical attack. All of these features combine to make the Performance Series sensors the best choice for industrial measurement applications.

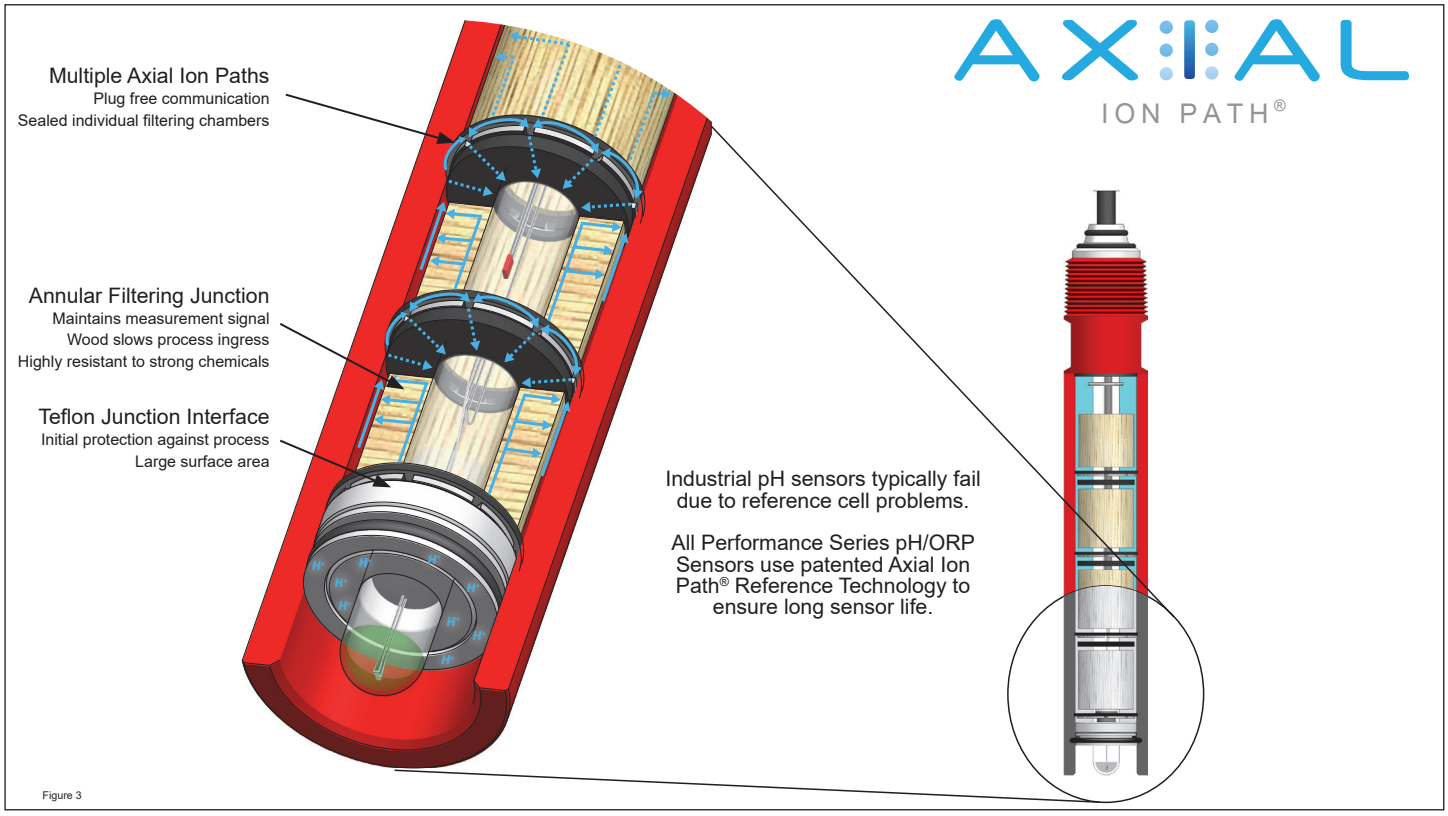

Figure 3

Performance Series pH/ORP Sensors

Low Noise, High Temperature Cable

Since Performance Series sensors are often mounted directly into the process, all products are manufactured with proprietary low-noise, high temperature cable. Competitive designs may use low-temperature cable to reduce signal noise (thus de-rating the sensor). Alternately, when high temperature cable is improperly specified, triboelectric noise can cause signal error. Barben Analytical has developed a proprietary cable that can withstand 130°C (266°F) process temperatures while providing stable pH measurement.

Specialized Glass Formulations and Configurations

Barben glass pH measurement electrodes are designed with unique formulations to prevent coating and scaling. Additional coating resistant options further improve lifespan in strong caustic (NaOH) and silica applications. These specialty glass formulations are manufactured to precision impedance ranges to ensure the best balance between high strength signal, speed of response, structural integrity under high pressure, long life in high temperatures and extreme acid and caustic pH conditions. Unique billet style ORP electrodes completely eliminate glass from the process thus further eliminating potential breakage.

Industrial Grade Mounting Options and Accessories

Barben Analytical provides a comprehensive offering of accessories to ensure convenient, safe and economical installation into your applications. In-line, submersible and hot tap (retractable through a isolation ball valve) are all standard options. In-line sensors with quick change “Nut Lock” adapters, rated to 300 psig, allow for easy access for calibration or maintenance in an isolated sample stream. In-line high pressure housings allow for operations up to 2,500 psig. Hot-Tap or Ball-valve retraction systems, rated to 300 psig allow for direct use into process without the need for sample or bypass lines. We offer hardware in 316 Stainless, Titanium and Hastelloy C-276, sensor bodies in Kynar and PEEK and seals in Viton® Extreme™, EPDM, and FFKM (Kalrez) to meet the specific demands of your process.

Interconnection with Existing pH and ORP Analyzers

Performance Series sensors are compatible with all major manufacturer’s pH analyzers with voltage input. Temperature compensation options for PT100, PT1000, 3kΩ (Balco), and 8550Ω (Honeywell) ensure full compatibility with existing analyzers. Now you can upgrade your process without replacing your field instrument. Wiring diagrams for many analyzers can be found at BarbenAnalytical.com.

Sensor Selection: Mounting

The first consideration when selecting a pH sensor is how will it be mounted into the process. Examples of various process mounting configurations are provided below.

In-line Sensor Mounting: In-line installations are common on sample streams off the main process. Isolation valves should be upstream / downstream of sensor for removal.

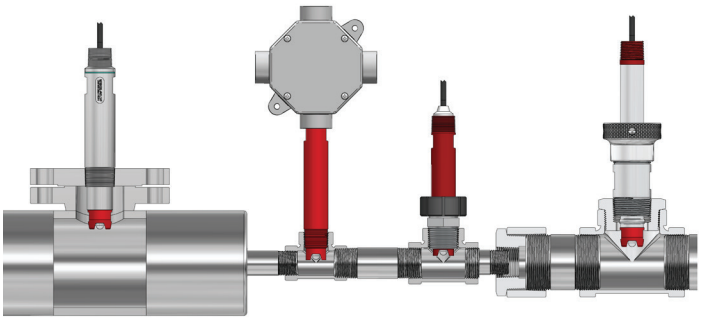

Hot Tap Sensor Mounting: Hot Tap refers to the ability to remove the sensor from the process while under pressure. A ball valve is used to isolate the sensor for removal.

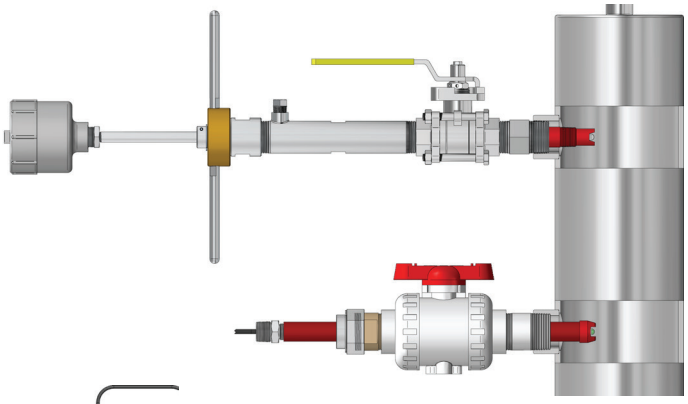

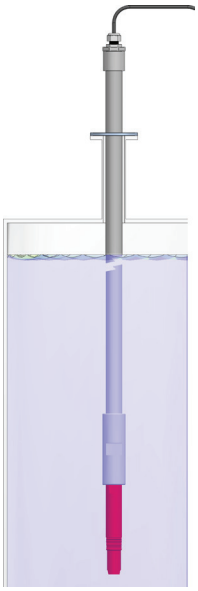

Submersible Sensor Mounting: Submersible mounting installations are required when the measurement is needed directly into a tank, reactor vessel or open channel. Typically the sensor must be mounted on a “dip tube” which is the hardware to submerge the sensor in the application.

Sensor Selection: Installation

Mounting Orientation

Sensor mounting for optimum performance should be considered prior to installation. The illustration below shows examples of vertical and horizontal installations.

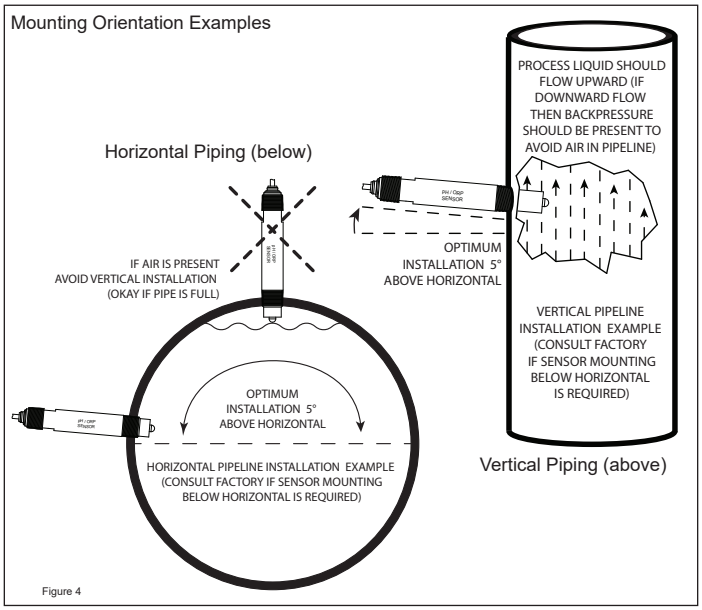

Isolation

pH / ORP sensors require periodic removal for cleaning, calibration, and eventual sensor replacement. Consideration in the piping design should be given as to how to isolate the sensor from the process.

Hot tap retractable sensors are popular since they can be extracted from the flowing process, isolated with a ball valve, and then removed. If a non-retractable sensor is installed then isolation valves need to be installed upstream and downstream.

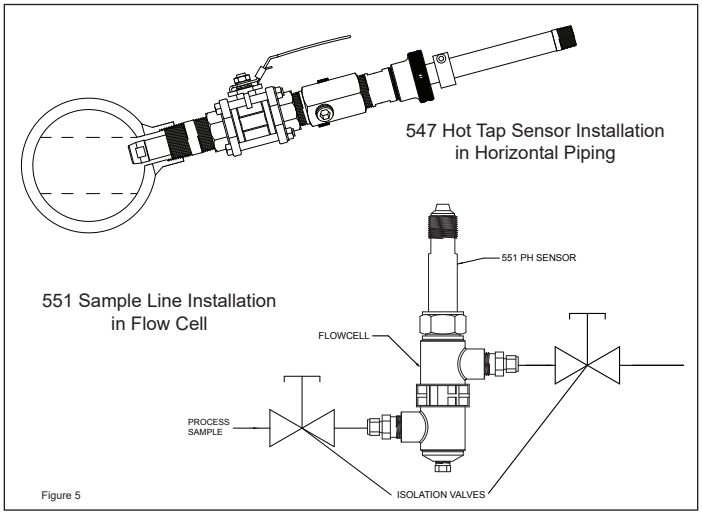

Insertion Depth

The depth that pH / ORP sensor protrudes into the pipeline can greatly affect the measurement. Applications where the sensor tip is recessed can lead to coating and slow response. In high particulate applications abrasion of the electrode can be a concern.

A typical installation goal is to get the sensor tip at least 1/4" (6mm) into the stream. At this depth coating issues lessen and response improves due to flow velocity. 546, 551 and 547 sensors offer a variety of insertion depths. Here are some guidelines.

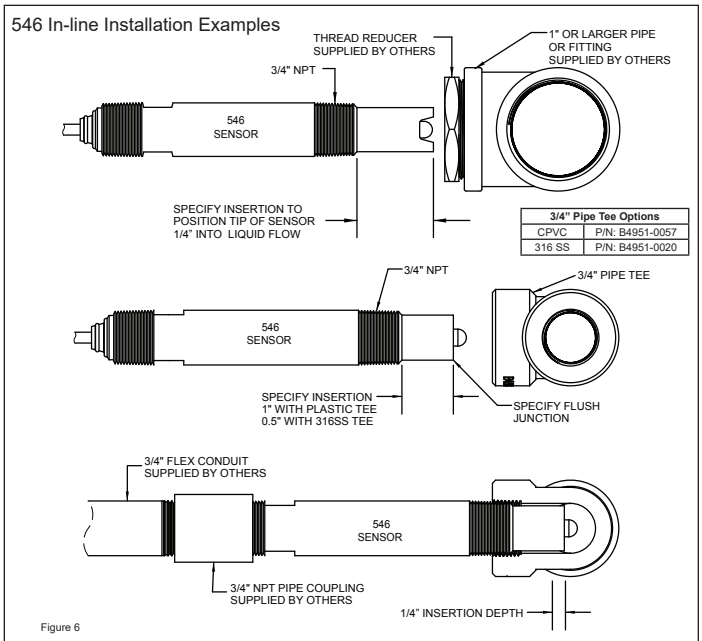

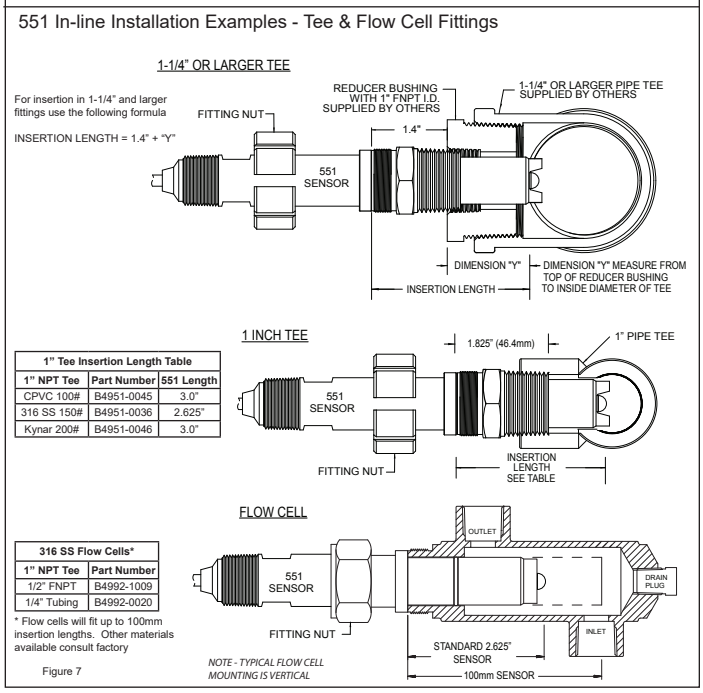

1" Tee Insertion Length Table		
1" NPT Tee	Part Number	551 Length
CPVC 100#	B4951-0045	3.0"
316 SS 150#	B4951-0036	2.625"
Kynar 200#	B4951-0046	3.0"

316 SS Flow Cells*	
1" NPT Tee	Part Number
1/2" FNPT	B4992-1009
1/4" Tubing	B4992-0020

* Flow cells will fit up to 100mm insertion lengths. Other materials available consult factory

Performance Series
pH/ORP Sensors

547 In-line Sizing Example

Insertion Depth = (A) - (B) - (C)

The insertion depth should exceed any mounting hardware (flange, standoff or thread-o-let) plus the pipe wall thickness by at least 1/4" (6mm) to get the tip of the sensor into the process.

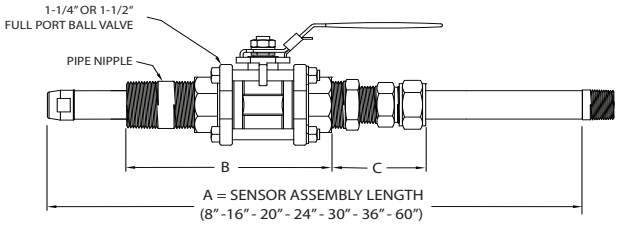

Figure 8

Valve & Nipple	"B" Dim.	Compression Fitting	"C" Dim.
1-1/4" SS Valve	6.5"	Wrench Tight	3.0"
		Hand Tight	3.5"
1-1/2" SS Valve	7.1"	Wrench Tight	3.0"
		Hand Tight	4.5"
1-1/4" Kynar Valve	8.0"	Wrench Tight	3.0"
		Hand Tight	3.5"
1-1/2" Kynar Valve	8.6"	Wrench Tight	3.0"
		Hand Tight	4.5"

Sensor Selection: Electrode Options

Code	Glass Type	Suggested Applications	Recommended Measurement Range	Recommended Temp Range	Maximum Temp Range
R CR	Industrial High Temp (Hemi) Industrial High Temp Coat Resist (Hemi)	Best choice for hi/low pH & high pressure. Coat resistant excels in NaOH. Hemispherical glass.	0 to 14 pH	15 to 100°C 59 to 212°F	15 to 130°C 59 to 266°F
FG CF	Flat Industrial Glass Flat Industrial Glass Coat Resist	Best choice for in-line slurries. Consult if rapid pressure changes are present.	0 to 14 pH	20 to 85°C 68 to 185°F	20 to 130°C 68 to 266°F
PX	Redox (ORP)	Flat Platinum (Pt) Billet. Non-glass. Easy to clean.	0 to ±1500mV	0 to 130°C 32 to 266°F	0 to 130°C 32 to 266°F
E CE	General Purpose General Purpose Coating Resist	Light to medium duty pH electrode for low temperature applications. Not for high pH.	2 to 11 pH	-10 to 40°C 14 to 104°F	-20 to 50°C -4 to 122°F
FA	Antimony (Sb) Non-glass Electrode	Antimony (metal) pH electrode for abrasives or HF acid or low temperature applications.	3 to 11 pH	-20 to 80°C -4 to 176°F	-20 to 80°C -4 to 176°F
FR	Fluoride / HF Acid (Hemi)	Resistant to etching by HF and other strong acids. Hemispherical pH glass.	1 to 14 pH	15 to 100°C 59 to 212°F	15 to 130°C 59 to 266°F
HR	Silica Resistant High Temp (Hemi)	Best choice for extreme pH where silica may coat traditional electrodes. Hemispherical glass.	1 to 14 pH	15 to 100°C 59 to 212°F	15 to 130°C 59 to 266°F
FH	Silica Resistant Flat Glass	Best choice for slurries and heavy fouling where silica may coat traditional glass electrodes.	1 to 14 pH	15 to 85°C 59 to 185°F	15 to 130°C 59 to 266°F

= Most common electrodes

= Special Application (Consult with factory)

Sensor Selection: Additional Options

Temperature Compensation

- PT100 RTD
- PT1000 RTD
- 3.01K Ohm RTD Balco
- 8550 Ohm (Honeywell / Leeds & Northrup)

Sensor Body Material

- Kynar PVDF: *Red, White, or Blue based on model*
- PEEK: *Beige*

Sensor O-Ring Material

- Viton® Extreme™ ETP-600S
- EPDM
- FFKM (perfluoro-elastomer: i.e. Kalrez)

Sensor Tip Examples

Notched Tip Flat Glass

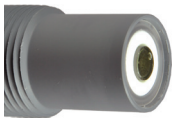

Flush Tip Flat Glass

Flush Tip Redox (ORP)

Notched Tip Hemispherical Glass

Flush Tip Hemispherical Glass

When selecting the sensor tip consider the process. Notches protect against breakage from heavy particulates. Flush tips are effective for soft coatings. For extreme abrasion a recessed tip can be offered *(not shown)*.

Figure 9

Sensor Wiring Termination Examples

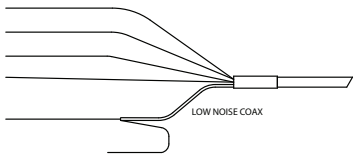

Tinned Leads: This option is commonly specified when the sensor is directly wired to the analyzer

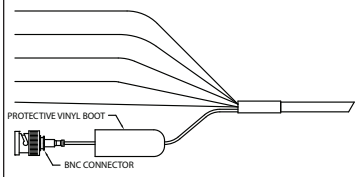

BNC Connector: BNC's offer a low impedance connector to the coaxial wire carrying the pH signal. It is often used when the sensor will connect to an extension cable.

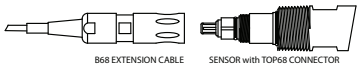

TOP68: The industry standard TOP68 connector provides a quick disconnect option at the sensor.

Figure 10

Model 546

Threaded In-line, Submersible, High Pressure Hot Tap

The versatile Model 546 is suitable for in-line sample stream applications using the 3/4 inch NPT process connection. A similar 3/4 inch NPT connection on the rear of the sensor is used to mount the sensor in submersible and high pressure hot tap installations. With tip lengths from 0.5 to 5.0 inches the 546 sensor can fit through extended pipe nipples and flanges to reach into the process and provide optimum pH/ORP measurement.

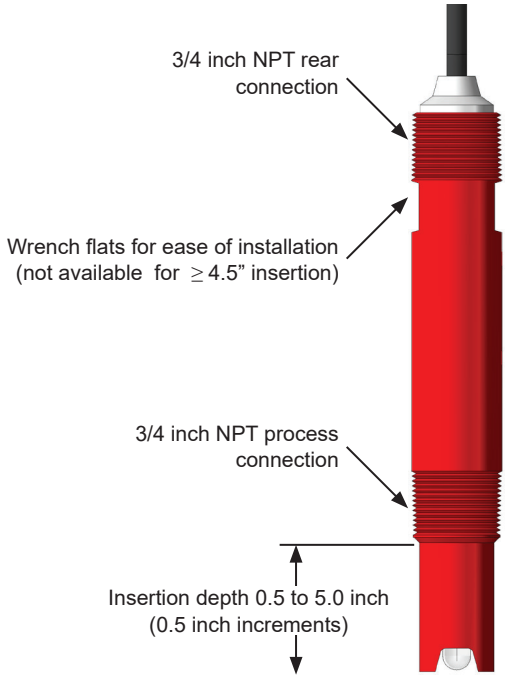

Pressure / Temperature Ratings

Sensor Material	Installation Type	
	3/4" In-line or Submersible*	High Pressure Hot Tap
Kynar *(red / blue**)*	150 PSIG @ 158°F (70°C) 40 PSIG @ 266°F (130°C)	300 PSIG @ 176°F (80°C) 40 PSIG @ 266°F (130°C)
PEEK *(tan)*	150 PSIG @ 158°F (70°C) 40 PSIG @ 266°F (130°C)	300 PSIG @ 176°F (80°C) 40 PSIG @ 266°F (130°C)

* When using jet cleaner please consult accessories documentation for pressure ratings
** Blue Kynar (used with solution ground) not recommended in high pressure hot tap applications.

546 Examples

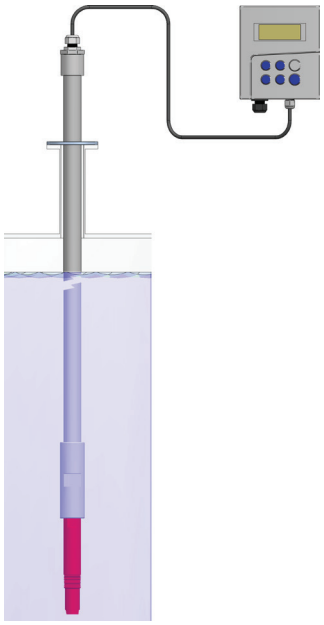

546 Submersible with Dip Tube and Analyzer

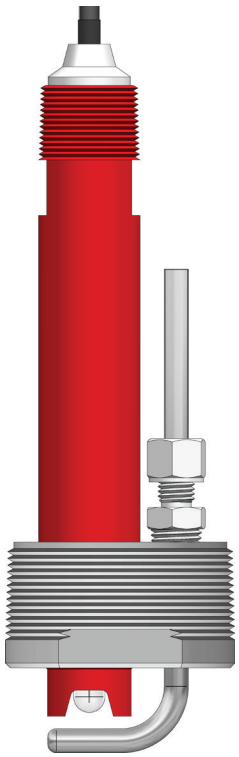

546 Submersible with Jet Cleaner (1.5 inch tip required)

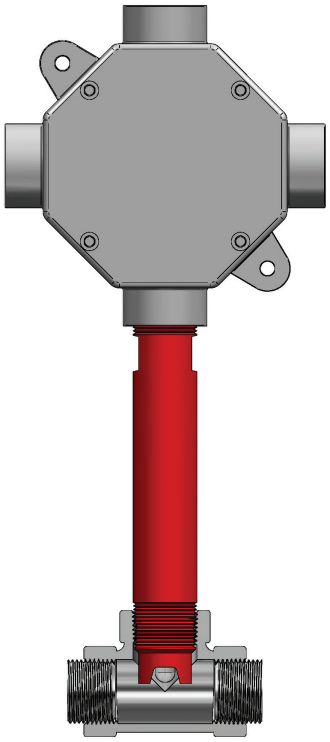

546 in-line 3/4 inch pipe tee with optional junction box

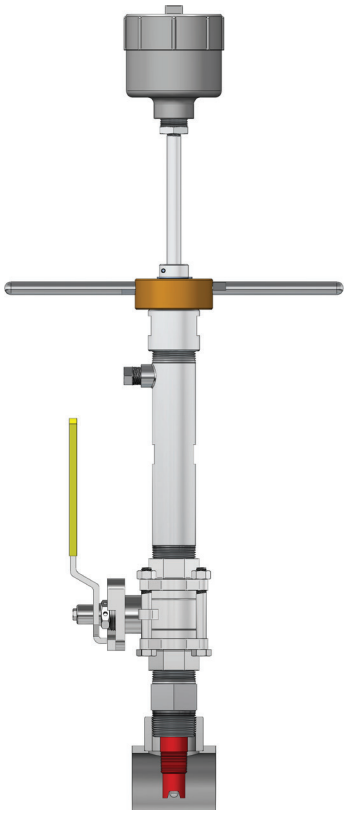

546 High Pressure Hot Tap (0.5 inch tip recommended)

Figure 11

Performance Series
pH/ORP Sensors

546 In-line / Submersible / High Pressure Hot Tap 3/4 inch NPT pH / ORP Sensors

Material	Axial Ion Path	Body	Electrode	Tip	TC	Body Options	Insertion Depth	Cable	Reference Wire	Terminations	
Body Material											
B	PVDF Kynar										
K	PEEK (not available with Solution Ground)										
	O-Ring Seal Material										
	V	Viton® Extreme™ ETP-600S									
	E	EPDM									
	K	FFKM (perfluoro-elastomer)									
		Body Style									
		546	3/4" MNPT Thread Inline/Submerged, Kynar/PEEK High Pressure for valve insertertion available to 300PSIG (Drawings: 2P0001 Cartridge; 2P0007 Installation Examples; 2P0034 Flow Installations)								
			Measuring Electrode								
			R	Ruggedized, Hemi-glass (0 - 14 pH) 15 to 130°C (59 to 266°F)							
			E	Low Temp Hemi-glass (2 - 11 pH) -20 to 50°C (-4 to 122°F)							
			CE	Coating Resistant, Low Temp Hemi-glass (2 - 11 pH) -20 to 50°C (-4 to 122°F)							
			CF	Coating Resistant, Ruggedized, Flat-glass (0 - 14 pH) 20 to 130°C (68 to 266°F)							
			CR	Coating Resistant, Ruggedized, Hemi-glass (0 - 14 pH) 15 to 130°C (59 to 266°F)							
			FA	Antimony Measuring Electrode for Hydrofluoric Acid Applications (3 - 8 pH) -20 to 80°C (-4 to 176°F)							
			FG	Ruggedized, Flat-glass (0 - 14 pH) 20 to 130°C (68 to 266°F)							
			FR	Hydroflouric Acid Resistant, Ruggedized, Hemi-glass (1 - 14 pH) 15 to 130°C (59 to 266°F)							
			FH	Silica Resistant Coating, Ruggedized, Flat-glass (1 - 14 pH) 20 to 130°C (68 to 266°F)							
			HR	Silica Resistant Coating, Ruggedized, Hemi-glass (1 - 14 pH) 15 to 130°C (59 to 266°F)							
			PX	Platinum ORP, Flat Solid Billet (0 to +/-1500 mV) 0 to 130°C (32 to 266°F)							
				Tip Configuration with Teflon Liquid Junction							
				FT	Flush no tip protection						
				GT	Flush no tip protection, with Solution Ground (Not for High Pressure)						
				DT	Dual Notch						
				LT	Dual Notch with Solution Ground (Not for High Pressure)						
					Temperature Compensation (TC)						
					N	None					
					B	Balco 3.01K Ohm (2 Wire)					
					C	PT100 RTD (3 Wire)					
					H	Honeywell 8550 ohm (2 Wire)					
					K	PT1000 RTD (3 Wire)					
						Body Options					
						S	Standard Body 546				
						C	High pressure certification, **Kynar/PEEK only**				
							Insertion Depth from small end of front pipe thread to front of body				
							0.5	0.5"			
							1.0	1.0"			
							1.5	1.5"			
							2.0	2.0" (Kynar only)			
							2.5	2.5" (Kynar only)			
							3.0	3.0" (Kynar only)			
							3.5	3.5" (Kynar only)			
							4.0	4.0" (Kynar only)			
							4.5	4.5" (Kynar only, No Wrench Flats)			
							5.0	5.0" (Kynar only, No Wrench Flats)			
								Cable Configuration - High Temperature, Low Noise TPE Jacket			
								JB	Junction Box Preinstalled (for use with B39 Extension cable when complete assembly is specified)		
								T	8" Pigtail - for use with junction box		
								T3	8" Pigtail for High Pressure Hot Tap		
								PH	TOP68 Quick Disconnect Plug Head **(PT100 Temp Compensation Only)**		
								1 to 5	1' to 5' - Standard		
								6 to 15	6' to 15'		
								16 to 30	16' to 30'		
								31 to 100	**Longer lengths available. Consult factory for installation, application and leadtime. For lengths >30 feet, please consider Junction Box, Extension Cable and possible pre-amp.**		
									Reference Wire		
									C	Reference wire on coax shield **(Common with BNC leads used with B39 Ext Cables)**	
									E	Reference on separate wire **(Best choice for direct wiring to analyzers)**	
										Lead Terminations	
										BT	BNC (with tinned wires if sensor has temp comp)
										BL	BNC (with #6 spade lug wires if sensor has temp comp)
										B2	BNC (with Molex for temp comp; use with B39 Ext Cables)
										TT	All tinned lead wires
										LL	All #6 spade lug wires
										PT	TOP68 Quick Disconnect Plug Tail on cable
										PP	All wire ferrules
Mtl	AIP	Body	Elec	Tip	TC	Opt	Depth	Cable	Ref	Term	
B	**V**	**546**	**R**	**DT**	**C**	**S**	**0.5**	**15**	**E**	**TT**	**Typical Sensor Configuration**

Model 551
Quick Change In-line

In some in-line applications sensor removal for routine cleaning or calibration becomes difficult due to conduit or cabling. The 551 Quick Change Sensor offers a unique method to extract the sensor through a “Nut Lock” Adapter system. The Nut Lock Adapter threads directly into 1 inch NPT process connections. Sensor length options up to 12 inches allows the sensor to fit through flanges and stand-off piping. The 551 sensor also includes a 3/4 inch rear connection for use in submersible applications.

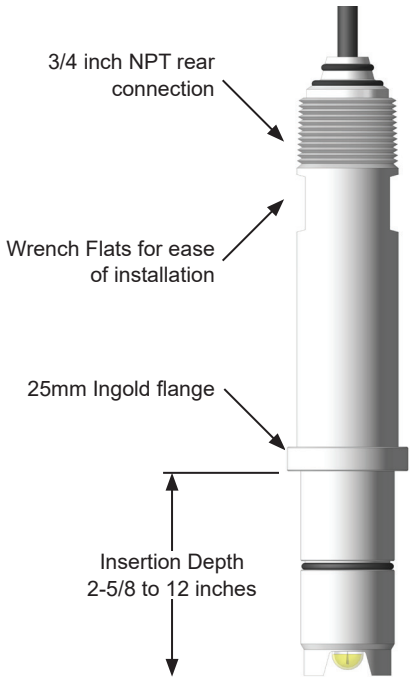

Pressure / Temperature Ratings

Sensor Material	Quick Change Nut Lock Adapter Style		
	Threaded plastic or metal body with hand nut	Threaded metal body with metal hex nut	Plastic body with metal hex nut (flanged or threaded mounting)
Kynar *(White)*	150 PSIG @ 158°F (70°C) 40 PSIG @ 266°F (130°C)	300 PSIG @ 176°F (80°C) 40 PSIG @ 266°F (130°C)	150 PSIG @ 73°F (25°C) 25 PSIG @ 266°F (130°C)
PEEK *(tan)*	150 PSIG @ 158°F (70°C) 40 PSIG @ 266°F (130°C)	300 PSIG @ 176°F (80°C) 40 PSIG @ 266°F (130°C)	150 PSIG @ 73°F (25°C) 25 PSIG @ 266°F (100°C)

551 Examples

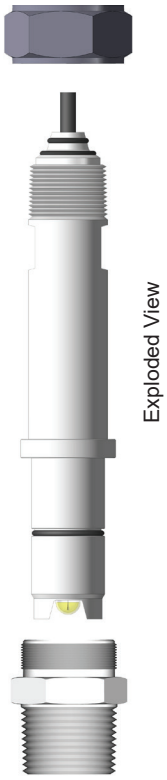

551 with Nut Lock Adapter

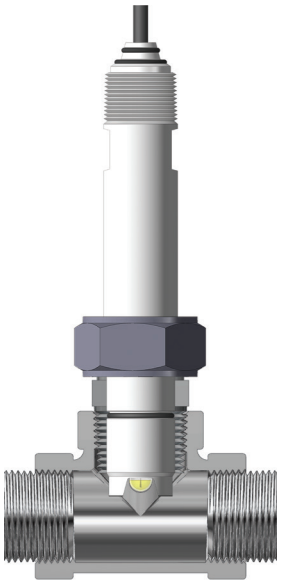

551 with Nut Lock Adapter mounted in 1 inch pipe tee (Tee P/N B4951-0036)

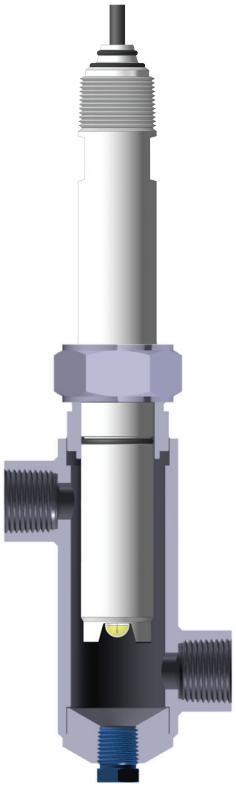

551 mounted in flow cell (Flow cell P/N B4992-1009)

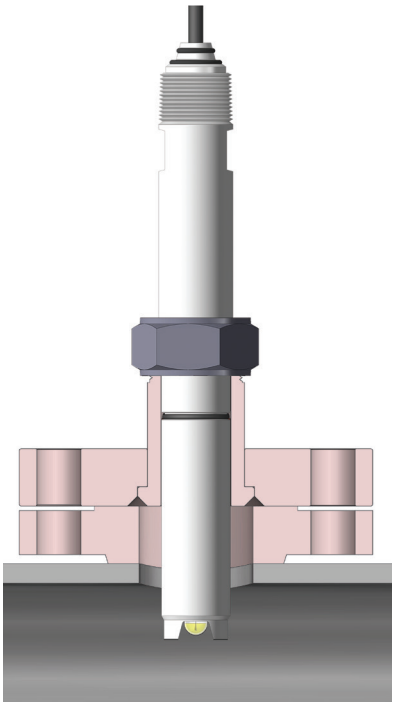

551 with Flanged Nut Lock Adapter (P/N B4951-0066)

Figure 12

Performance Series
pH/ORP Sensors

551 Quick Change In-line / Submersible pH / ORP Sensors

Material	Axial Ion Path	Body	Electrode	Tip	TC	Body Options	Insertion Depth	Cable	Reference Wire	Terminations	
Body Material											
B	PVDF Kynar PVDF Kynar										
K	PEEK (not available with Solution Ground, only 100 mm and 4.0 " insertion depth depth)										
	O-Ring Seal Material										
	V	Viton® Extreme™ ETP-600S									
	E	EPDM									
	K	FFKM (perfluoro-elastomer)									
		Body Configuration									
		551	Quick-Change Inline, Kynar available High Pressure to 300PSIG								
			Measuring Electrode								
			R	Ruggedized, Hemi-glass (0 - 14 pH) 15 to 130°C (59 to 266°F)							
			E	Low Temp Hemi-glass (2 - 11 pH) -20 to 50°C (-4 to 122°F)							
			CE	Coating Resistant, Low Temp Hemi-glass (2 - 11 pH) -20 to 50°C (-4 to 122°F)							
			CF	Coating Resistant, Ruggedized, Flat-glass (0 - 14 pH) 20 to 130°C (68 to 266°F)							
			CR	Coating Resistant, Ruggedized, Hemi-glass (0 - 14 pH) 15 to 130°C (59 to 266°F)							
			FA	Antimony Measuring Electrode for Hydrofluoric Acid Applications (3 - 8 pH) -20 to 80°C (-4 to 176°F)							
			FG	Ruggedized, Flat-glass (0 - 14 pH) 20 to 130°C (68 to 266°F)							
			FR	Hydroflouric Acid Resistant, Ruggedized, Hemi-glass (1 - 14 pH) 15 to 130°C (59 to 266°F)							
			FH	Silica Resistant Coating, Ruggedized, Flat-glass (1 - 14 pH) 20 to 130°C (68 to 266°F)							
			HR	Silica Resistant Coating, Ruggedized, Hemi-glass (1 - 14 pH) 15 to 130°C (59 to 266°F)							
			PX	Platinum ORP, Flat Solid Billet (0 to +/-1500 mV) 0 to 130°C (32 to 266°F)							
				Tip Configuration with Teflon Liquid Junction							
				FT	Flush with no tip protection						
				GT	Flush with no tip protection with Solution Ground **(150 PSIG max. standard insertion depth only)**						
				DT	Dual Notch						
				LT	Dual Notch with Solution Ground **(150 PSIG max. standard insertion depth only)**						
					Temperature Compensation (TC)						
					N	None					
					B	Balco 3.01K Ohm (2 Wire)					
					C	PT100 RTD (3 Wire)					
					H	Honeywell 8550 ohm (2 Wire)					
					K	PT1000 RTD (3 Wire)					
						Body Options					
						S	Standard Body 551				
						C	High pressure certification **(Kynar only)**				
						A	1" MNPT Nut-Lock Adapter - SS316 wetted body & hex nut 300 PSIG Max. (B4954-0022)				
						B	1" MNPT Nut-Lock Adapter - Kynar wetted body with SS316 hex nut 150 PSIG Max. (B4953-0015)				
						D	1" MNPT Nut-Lock Adapter - Titanium Gr. 2 wetted body & SS316 hex nut 300 PSIG Max. (B4954-0036)				
							Insertion Depth from Rib to Front of Body (Not available with solution ground except with "N", PEEK Available for 100mm)				
							N	Standard (2.625" from rib) (only one with solution ground)			
							3.0	3.0"			
							3.5	3.5"			
							4.0	4.0" **(actual insertion depth 3.94")**			
							4.5	4.5"			
							5.0	5.0"			
							5.5	5.5"			
							6.0	6.0"			
							6.5	6.5"			
							7.0	7.0"			
							7.5	7.5"			
							8.0	8.0"			
							8.5	8.5"			
							9.0	9.0"			
							9.5	9.5"			
							10.0	10.0"			
							100	100mm (only available insertion depth for PEEK)			
							150	150mm			
							200	200mm			
								Cable Configuration - High Temperature, Low Noise TPE Jacket			
								JB	Junction Box Preinstalled (for use with B39 Extension cable when complete assembly is specified)		
								T	8" Pigtail - for use with junction box		
								PH	TOP68 Quick Disconnect Plug Head **(PT100 Temp Compensation Only)**		
								1 to 5	1' to 5' - Standard		
								6 to 15	6' to 15'		
								16 to 30	16' to 30'		
								31 to 100	**Longer lengths available. Consult factory for installation, application and leadtime. For lengths >30 feet, please consider Junction Box, Extension Cable and possible pre-amp.**		
									Reference Wire		
									C	Reference wire on coax shield **(Common with BNC leads used with B39 Ext Cables)**	
									E	Reference on separate wire **(Best choice for direct wiring to analyzers)**	
										Lead Terminations	
										BT	BNC (with tinned wires if sensor has temp comp)
										BL	BNC (with #6 spade lug wires if sensor has temp comp)
										B2	BNC (with Molex for temp comp; use with B39 Ext Cables)
										TT	All tinned lead wires
										LL	All #6 spade lug wires
										PT	TOP68 Quick Disconnect Plug Tail on cable
										PP	All wire ferrules
Mtl	AIP	Body	Elec	Tip	TC	Opt	Depth	Cable	Ref	Term	
B	**V**	**551**	**R**	**DT**	**C**	**S**	**N**	**15**	**E**	**TT**	**Typical Sensor Configuration**

Model 547

In-line, High Pressure In-line, Hot Tap Retractable

The Model 547 is a replaceable, cartridge style sensor. It is designed to fit into a variety of sensor holders for direct insertion into the process. When used with a metallic sheath the 547 sensor can provide variable insertion depth for hot tap ball valve installations as well as the ability to withstand pressures up to 2500 PSIG with Barben's high pressure housing assembly.

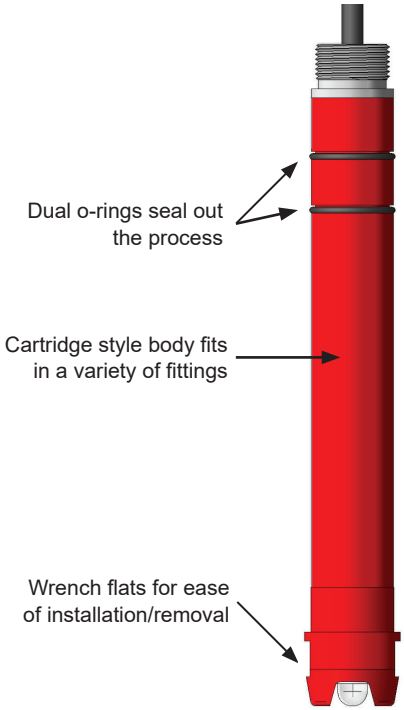

Pressure / Temperature Ratings

Sensor Material	Installation Type	
	Threaded In-line High Pressure	Retractable
Kynar *(red / blue*)*	2500 PSIG @ 122°F (50°C) 50 PSIG @ 266°F (130°C)	150 PSIG @ 158°F (70°C) 40 PSIG @ 266°F (130°C)
PEEK *(tan)*	2500 PSIG @ 122°F (50°C) 50 PSIG @ 266°F (130°C)	150 PSIG @ 158°F (70°C) 40 PSIG @ 266°F (130°C)

* Blue Kynar rated to 150PSIG @ 158°F (70°C) in threaded in-line high pressure applications.

547 Examples

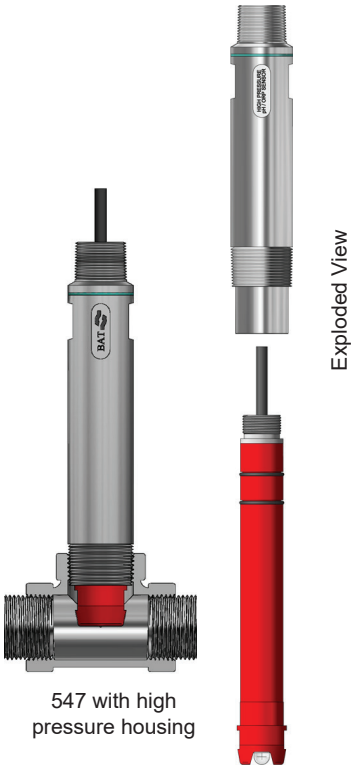

547 with high pressure housing

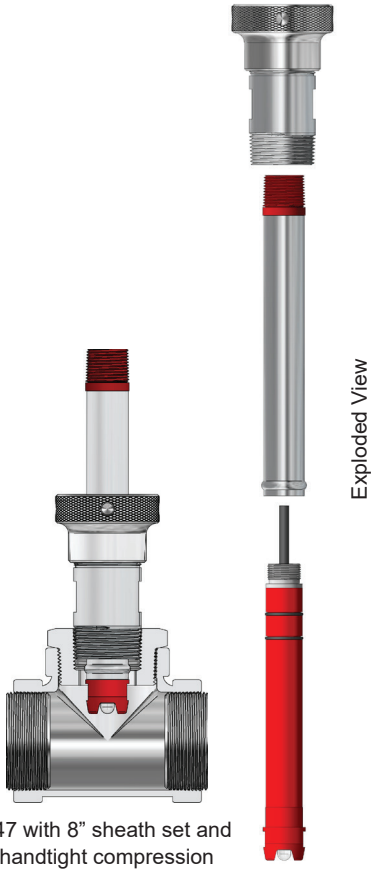

547 with 8" sheath set and handtight compression fitting

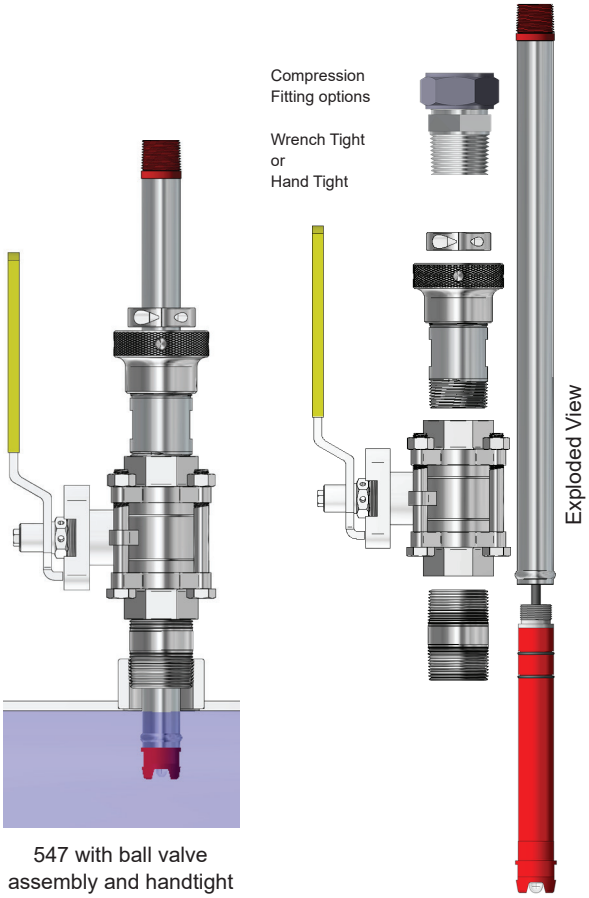

547 with ball valve assembly and handtight compression fitting

Figure 13

Performance Series
pH/ORP Sensors

547 In-line, High Pressure In-line, Hot Tap Retractable pH / ORP Sensors

Material	Axial Ion Path	Body	Electrode	Tip	TC	Body Options	Insertion Depth	Cable	Reference Wire	Terminations	
Body Material											
B	PVDF Kynar										
K	PEEK (not available with Solution Ground)										
	O-Ring Seal Material										
	V	Viton® Extreme™ ETP-600S									
	E	EPDM									
	K	FFKM (perfluoro-elastomer)									
		Body Configuration									
		547	Replacement Cartridge, Valve Ins, Flow Cell, Kynar or PEEK avail High Pressure to 2500PSIG								
			Measuring Electrode								
			R	Ruggedized, Hemi-glass (0 - 14 pH) 15 to 130°C (59 to 266°F)							
			E	Low Temp Hemi-glass (2 - 11 pH) -20 to 50°C (-4 to 122°F)							
			CE	Coating Resistant, Low Temp Hemi-glass (2 - 11 pH) -20 to 50°C (-4 to 122°F)							
			CF	Coating Resistant, Ruggedized, Flat-glass (0 - 14 pH) 20 to 130°C (68 to 266°F)							
			CR	Coating Resistant, Ruggedized, Hemi-glass (0 - 14 pH) 15 to 130°C (59 to 266°F)							
			FA	Antimony Measuring Electrode for Hydrofluoric Acid Applications (3 - 8 pH) -20 to 80°C (-4 to 176°F)							
			FG	Ruggedized, Flat-glass (0 - 14 pH) 20 to 130°C (68 to 266°F)							
			FR	Hydroflouric Acid Resistant, Ruggedized, Hemi-glass (1 - 14 pH) 15 to 130°C (59 to 266°F)							
			FH	Silica Resistant Coating, Ruggedized, Flat-glass (1 - 14 pH) 20 to 130°C (68 to 266°F)							
			HR	Silica Resistant Coating, Ruggedized, Hemi-glass (1 - 14 pH) 15 to 130°C (59 to 266°F)							
			PX	Platinum ORP, Flat Solid Billet (0 to +/-1500 mV) 0 to 130°C (32 to 266°F)							
				Tip Configuration with Teflon Liquid Junction							
				FT	Flush no tip protection						
				GT	Flush no tip protection, with Solution Ground (Not for High Pressure)						
				DT	Dual Notch						
				LT	Dual Notch with Solution Ground (Not for High Pressure)						
					Temperature Compensation (TC)						
					N	None					
					B	Balco 3.01K Ohm (2 Wire)					
					C	PT100 RTD (3 Wire)					
					H	Honeywell 8550 ohm (2 Wire)					
					K	PT1000 RTD (3 Wire)					
						Body Options					
						S	Standard Body				
						C	High pressure certification				
						A	8 in. 316 Stainless Steel sheath				
						B	8 in. Titanium Grade 2 sheath				
						D	8 in. Hastelloy C sheath				
						E	16 in. 316 Stainless Steel sheath				
						F	16 in. Titanium Grade 2 sheath				
						G	16 in. Hastelloy C sheath				
						H	20 in. 316 Stainless Steel sheath				
						J	20 in. Titanium Grade 2 sheath				
						K	20 in. Hastelloy C sheath				
						L	24 in. 316 Stainless Steel sheath				
						M	24 in. Titanium Grade 2 sheath				
						N	24 in. Hastelloy C sheath				
						P	30 in. 316 Stainless Steel sheath				
						Q	30 in. Titanium Grade 2 sheath				
						R	30 in. Hastelloy C sheath				
						T	36 in. 316 Stainless Steel sheath				
						U	36 in. Titanium Grade 2 sheath				
						V	36 in. Hastelloy C sheath				
						W	60 in. 316 Stainless Steel sheath				
						X	60 in. Titanium Grade 2 sheath				
						Y	60 in. Hastelloy C sheath				
							Accessory Hardware (Sensor O-Ring Material aboves determines Assessory Hardware Material)				
							N	Standard Replacement Sensor Cartridge			
							1	1" SS316 Wrench Tight Compression Fitting (B4954-0001V, E, K)			
							4	1" Titanium Grade 2 Wrench Tight Compression Fitting (B4954-0009V, E, K)			
							7	1" Hastelloy C Wrench Tight Compression Fitting (B4954-0002V, E, K)			
							8	1-1/4" SS316 Hand Tight Compression Fitting (B4954-0003V, E, K)			
							B	1-1/4" Titanium Grade 2 Hand Tight Compression Fitting (B4954-0005V, E, K)			
							D	1-1/4" Hastelloy C Hand Tight Compression Fitting (B4954-0004V, E, K)			
							E	1" Kynar (PVDF) Hand Tight Compression Fitting (40PSIG Max)			
								Cable Configuration - High Temperature, Low Noise TPE Jacket			
								JB	Junction Box (for use with B39 Extension cable when complete assembly is specified)		
								T1	8" Pigtail for (8" assy or High Pressure or SS Flow Cell)		
								T2	8" Pigtail for (16" assy)		
								T3	8" Pigtail for (20" assy)		
								T4	8" Pigtail for (24" assy)		
								T5	8" Pigtail for (30" assy)		
								T6	8" Pigtail for (36" assy)		
								T7	8" Pigtail for (60" assy)		
								1 to 5	1' to 5' - Standard		
								6 to 15	6' to 15'		
								16 to 30	16' to 30'		
								31 to 100	**Longer lengths available. Consult factory for information and leadtime. For lengths >30 feet, please consider Junction Box, Extension Cable and possible pre-amp.**		
									Reference Wire		
									C	Reference wire on coax shield **(Common with BNC leads used with B39 Ext Cables)**	
									E	Reference on separate wire **(Best choice for direct wiring to analyzers)**	
										Lead Terminations	
										BT	BNC (with tinned wires if sensor has temp comp)
										BL	BNC (with #6 spade lug wires if sensor has temp comp)
										B2	BNC (with Molex for temp comp; use with B39 Ext Cables)
										TT	All Tinned Lead wires
										LL	All #6 Spade Lug wires
										PT	TOP68 Quick Disconnect Plug Tail on cable
										PP	All wire ferrules
Mtl	AIP	Body	Elec	Tip	TC	Opt	Depth	Cable	Ref	Term	
B	**V**	**547**	**R**	**DT**	**C**	**S**	**N**	**15**	**E**	**TT**	**Typical Sensor Configuration**

Model 567
All Plastic Hot Tap Retractable

If your piping is corrosion resistant plastic, shouldn't your pH sensor be the same? The Model 567 is specifically designed for use in the most aggressive measurement applications. It is the only "All Plastic" hot tap retractable pH sensor available to the market. The 567 sensor uses a Kynar insertion body thus eliminating the metallic sheath typically used with cartridge style hot tap sensors. Not only can it withstand strong chemicals; the Kynar body provides a great solution in applications that build-up and adhere to metallic parts.

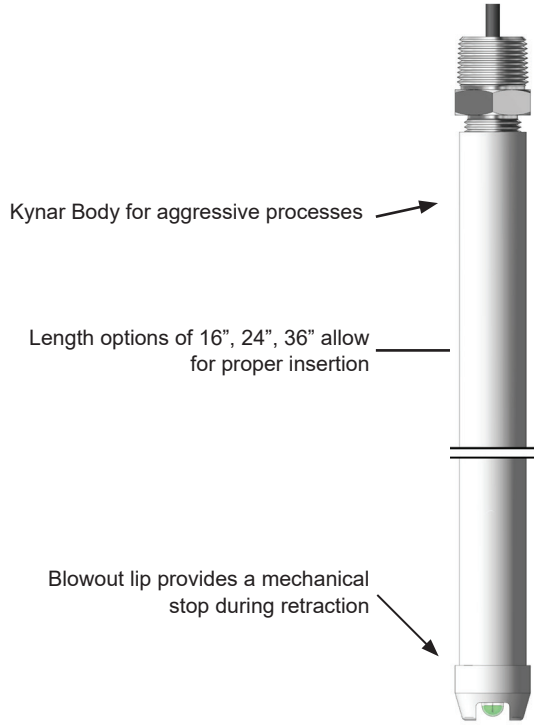

Pressure / Temperature Ratings

Sensor Material	Installation Type	
	Teflon or Kynar Compression Fitting	PEEK Stop Lock Compression Fitting
Kynar *(white)*	40 PSIG @ 167°F (75°C)	100 PSIG @ 167°F (75°C) 35 PSIG @ 212°F (100°C)

567 Examples

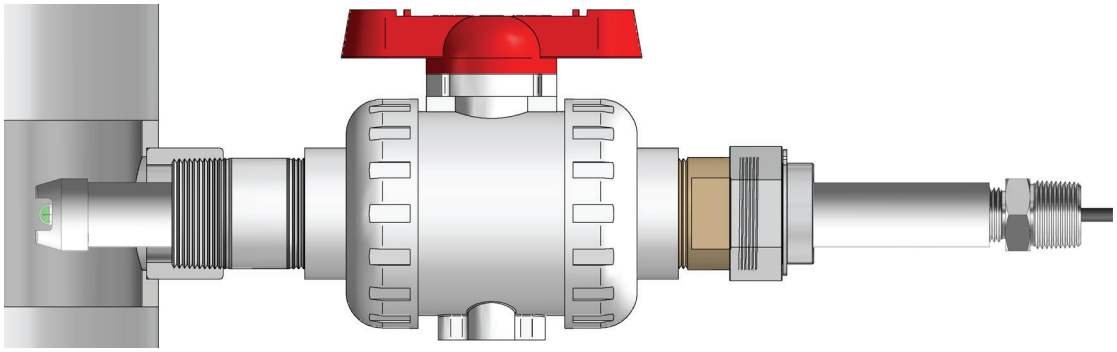

Installed in process pipeline

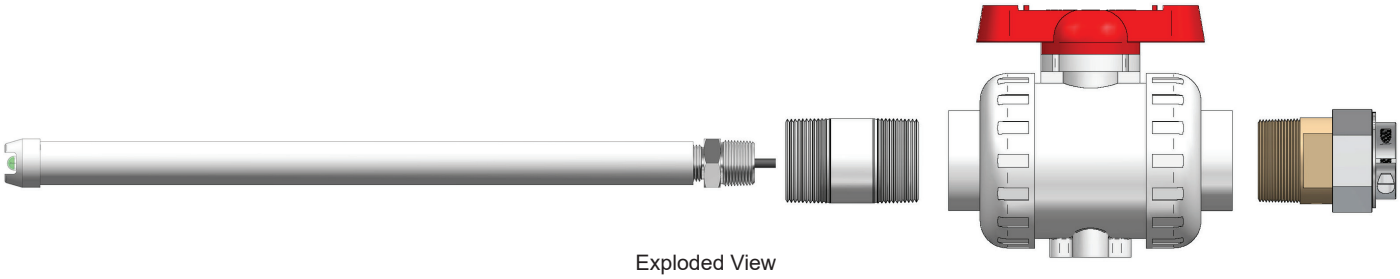

Exploded View

567 All Plastic hot tap sensor with Ball Valve assembly
and PEEK Stop Lock Compression Fitting

Figure 14

Performance Series
pH/ORP Sensors

567 All Plastic Hot Tap Retractable pH / ORP Sensors

Material	Axial Ion Path	Body	Electrode	Tip	TC	Body Options	Insertion Depth	Cable	Reference Wire	Terminations	
Body Material											
B	PVDF Kynar Body Industrial pH sensor										
	O-Ring Seal Material										
	V	Viton® Extreme™ ETP-600S									
	E	EPDM									
	K	FFKM (perfluoro-elastomer)									
		Body Configuration									
		567	All plastic (Kynar only) valve insertion								
			Measuring Electrode								
			R	Ruggedized, Hemi-glass (0 - 14 pH) 15 to 130°C (59 to 266°F)							
			E	Low Temp Hemi-glass (2 - 11 pH) -20 to 50°C (-4 to 122°F)							
			CE	Coating Resistant, Low Temp Hemi-glass (2 - 11 pH) -20 to 50°C (-4 to 122°F)							
			CF	Coating Resistant, Ruggedized, Flat-glass (0 - 14 pH) 20 to 130°C (68 to 266°F)							
			CR	Coating Resistant, Ruggedized, Hemi-glass (0 - 14 pH) 15 to 130°C (59 to 266°F)							
			FA	Antimony Measuring Electrode for Hydrofluoric Acid Applications (3 - 8 pH) -20 to 80°C (-4 to 176°F)							
			FG	Ruggedized, Flat-glass (0 - 14 pH) 20 to 130°C (68 to 266°F)							
			FR	Hydroflouric Acid Resistant, Ruggedized, Hemi-glass (1 - 14 pH) 15 to 130°C (59 to 266°F)							
			FH	Silica Resistant Coating, Ruggedized, Flat-glass (1 - 14 pH) 20 to 130°C (68 to 266°F)							
			HR	Silica Resistant Coating, Ruggedized, Hemi-glass (1 - 14 pH) 15 to 130°C (59 to 266°F)							
			PX	Platinum ORP, Flat Solid Billet (0 to +/-1500 mV) 0 to 130°C (32 to 266°F)							
				Tip Configuration with Teflon Liquid Junction							
				FT	Flush with no tip protection						
				DT	Dual Notch						
					Temperature Compensation (TC)						
					N	None					
					B	Balco 3.01K Ohm (2 Wire RTD)					
					C	PT100 RTD (3 Wire RTD)					
					H	Honeywell 8550 ohm (2 Wire RTD)					
					K	PT1000 RTD (3 Wire RTD)					
						Body Options					
						S	Standard Body (Replacement Sensor)				
						F	1" Kynar (PVDF) Hand Tight Compression Fitting (B4953-0017V)				
						G	1" Teflon Wrench Tight Compression Fitting (B4953-0014V)				
							Insertion Depth				
							16	16"			
							24	24"			
							36	36"			
								Cable Configuration - High Temperature, Low Noise TPE Jacket			
								1 to 5	1' to 5' Hi-temp - Standard		
								6 to 15	6' to 15' Hi-temp		
								16 to 30	16' to 30' Hi-temp		
								31 to 100	**Longer lengths available. Consult factory for information and leadtime. For lengths >30 feet, please consider Junction Box, Extension Cable and possible pre-amp.**		
									Reference Wire		
									E	Reference on separate wire **(Best choice for direct wiring to analyzers)**	
										Lead Terminations	
										TT	All Tinned Leads
										PP	All Wire Ferrules
Mtl	AIP	Body	Elec	Tip	TC	Opt	Depth	Cable	Ref	Term	
B	**V**	**567**	**R**	**DT**	**C**	**S**	**16**	**15**	**E**	**TT**	**Typical Sensor Configuration**

Sensor Replacement
Cross Reference

Because of their improved longevity in harsh processes, Barben Performance Series Sensors allow the user to upgrade their process measurement simply by changing out their existing sensor. Barben pH/ORP sensors are fully compatible with most major manufacturer's analyzers. The cross reference guide below provides some basic guidelines on changing out sensors. Consult technical support for additional information on replacing competitive sensors.

Vendor	Vendor Model	Temperature Compensation	Barben Model	Barben Application Notes
ABB (Formerly TBI)	TB551 Next Step	3kΩ Balco PT100	551	Use standard "N" insertion depth, may require Nut Lock adapter
	TB556 Next Step		546	
	TB557 Next Step		547	547 will fit directly into ABB retractable sheath
	TB561 Next Step		551	
	TB564 Next Step		554	Consult factory on special Barben 554 Sensor
	TB567 Next Step		547	Request use of Barben high pressure sensor housing
Broadley-James	ST924 DynaProbe	3kΩ Balco PT100 PT1000	551	Use standard "N" insertion depth
	ST856 / ST956 DynaProbe		546	Use either 0.5" or 1.0" insertion depth
	ST873 / ST973 DynaProbe		551	Use 551 with Nut Lock Adapter, 547 with 8" sheath and wrench tight compression fitting can also be used
	ST864 DynaProbe		554	Consult factory on special Barben 554 Sensor
	ST857 / ST977 DynaProbe		547	Barben 547 will fit directly into Broadley-James retractable sheath
	ST851 / ST951 DynaProbe		551	Use standard "N" insertion depth. May require Nut Lock adapter
Endress & Hauser	CPF81 / CPF82	PT100	546	1" insertion with notched tip, 0.5" insertion with flush tip
	NOTE - Many E&H Sensor are based on the 12mm (PG13.5) standard. These sensors use adapters to mount into the process. Consult us on application			
Foxboro (Invensys)	PH10 Dolphin (3/4" inline)	3kΩ Balco PT100 PT1000	546	If PH10 uses 1" bushing then consider Barben 551 or 547 with 8" sheath and wrench tight compression fitting
	871A (1" Inline)	PT100 PT1000	551	Foxboro 871A uses 1" NPT process connection. Barben 551 Sensor with Nut Lock Adapter for inline applications
	871PH	PT1000	551	871PH uses a twist lock in-line connection. Consult Barben on fitting size for 551 sensor
Hach	pHD Sensors (DPD, DRD, PD, and RD)	NTC 300 Ω	551	Verify temperature sensor options transmitter can accept
	LCP Sensors (6028)		546	Verify temperature sensor options transmitter can accept, Hach Sensor has 1.5" NPT process connection thus fittings may be needed to mount Barben 546 sensor in process.
	DPC/DRC/PC1/PC2/PC3/RC1 /RC2 Combination Probes	PT1000	546	1" insertion depth
Mettler Toledo	InPro 4501	PT100 PT1000	551	Needs 1" NPT Nut Lock Adapter
	InPro 4550	PT100 PT1000	551	Needs 1" NPT Nut Lock Adapter
	NOTE - Many Mettler Toledo Sensors are based on the 12mm (PG13.5) standard. These sensors use fittings to mount into the process. Consult Barben on application.			
Rosemount	385 / 385+	3kΩ Balco PT100	547	Barben 547 with 16" sheath (Rosemount sheath is Titanium but other materials can be used)
	389		551	Rosemount 389 uses 1" NPT process connection. Barben 551 Sensor with Nut Lock Adapter for inline applications
	3900		551 546	Rosemount 3900 has both 3/4" and 1" threads on sensor body. Select Barben 546 if 3/4" threads are used. Select Barben 551 with Nut Lock Adapter if 1" NPT threads are used
	3300 PERpH-X	PT100	547	Barben 547 with 8" sheath (Rosemount sheath is Titanium but other materials can be used)
	3400 PERpH-X		547	Barben 547 with 24" or 36" sheath (Rosemount sheath is Titanium but other materials can be used)
	3500 PERpH-X		551	Rosemount 3500 uses 1" NPT process connection. Barben 551 Sensor with Nut Lock Adapter for inline applications
	372	PT100	546	Use 546 with 2" insertion depth. This sensor for HF Acid applications thus consider "FR" glass or Antimony electrode
Signet	2714/2715/2716/2717	3kΩ Balco	551	Signet offers additional fittings for in-line mounting
	2774/2775/2776/2777	3kΩ Balco PT1000	546	1" insertion with notched tip, 0.5" insertion with flush tip. Signet offers additional fittings for in-line mounting
	2724 / 2726		546	1" insertion with flush tip, 1.5" with notched tip. Signet offers additional fittings for in-line mounting
	2764/2765/2766/2767	3kΩ Balco PT1000 NTC 300 Ω	551	Signet offers additional fittings for in-line mounting
Yokogawa	FU20	PT1000	546	FU20 probes use a variety of adapters. Consult Barben on how sensor is mounted
	FU24		551	FU24 probes use a variety of adapters. Consult Barben on how sensor is mounted
	PH20		551	PH20 probes use a variety of adapters. Consult Barben on how sensor is mounted
	PH97		547	Barben 547 with 8" or 24" sheath (Yokogawa sheath is Titanium but other materials can be used)

Performance Series pH/ORP Sensors

Your Barben Analytical Representative

For product information, application assistance, or a quote, contact Adaptive Industrial Solutions.

Sales@adaptiveind.com

www.adaptiveind.com

Barben Analytical reserves the right to make technical changes or modify the contents of this document without prior notice. We reserve all rights in this document and in the subject matter and illustrations contained within.

Axial Ion Path is a registered trademark of Barben Analytical. U.S. Patent # 6,416,653, B1

Hastelloy® is a registered trademark of Haynes Intl Inc.
Viton® Extreme™ ETP-600S & Kalrez® are registered trademarks of DuPont Dow Elastomers
Kynar® is a registered trademark of Elf Atochem North America Inc.
Teflon® is a registered trademark of E.I. DuPont de Nemours Company Inc.

Performance Series
pH/ORP Sensors with CRN Registration

Specialty Products

- **Patented Axial Ion Path® Reference**
- **Specialized pH Glass Formulations and ORP Electrodes**
- **Proprietary Low-Noise, High Temperature Signal Cable**
- **Sensors are Compatible with Most Major Manufacturer's Analyzers**
- **Industrial Mounting Options**
- **Industry Leading Pressure and Temperature Ratings**
- **Many O-ring and Seal Options: Viton® Extreme™, EPDM & FFKM**
- **CRN Registration for Canada**

Axial Ion Path® Reference
- Patented design increases sensor life, accuracy and reliability
- High resistance to poison: Reduced calibration offset error
- Large surface area reference junction eliminates plugging issues
- Eliminates error due to fluctuating pressure
- No exotic gel or polymer electrolyte which may be incompatible with the process

Specialized Electrode Glass Formulations & Styles
- High accuracy and lifespan in strong acids and bases
- Coating resistant glass electrode reduces fouling
- Silica resistant option to eliminate bonding to glass
- Ruggedized hemispherical and flat glass options resist breaking

Proprietary Sensor Signal Cable
- Designed to eliminate measurement fluctuation due to noise
- Chemical and UV resistant
- Highest temperature rating (130°C)

Compatibility with Most Major Vendor's Electronics
- Proven with major vendors of pH analyzers (Rosemount, ABB, Foxboro, E&H, Mettler Toledo, GLI/Hach, Knick)
- Get higher accuracy and longer life in your application by upgrading the sensor

Industrial Mounting Options
- Mounting fittings for sample line installations
- Ball Valve "Hot Tap" retraction solutions
- Variety of materials for corrosive applications

Highest Pressure & Temperature Ratings
- In-line sensor installation to 150 PSIG (10 BAR)
- Quick Change "Nut Lock" to 286 PSIG (19.7 BAR)
- Retractable "Hot Tap" to 300 PSIG (20 BAR)
- Process temperature to 266°F (130°C)

Performance Series
pH/ORP Sensors with CRN Registration

Performance Series

The Barben Analytical Performance Series products are 3rd generation combination pH/ORP electrodes targeted at harsh, industrial measurement applications. High pressures, strong chemicals, and elevated temperatures typically shorten the lifespan of conventional double-junction pH probes. In these applications the Performance Series sensor offers extended sensor lifespan, as well as decreased drift, and longer calibration intervals.

Each sensor is manufactured with our patented Axial Ion Path® reference technology, proprietary Low-Noise & High-Temp Signal Cable along with proprietary ruggedized, high temp and coat resistant glass formulations.

A wide selection of sensor body styles and process fittings in a variety of corrosion resistant materials allow direct replacement of short-lived OEM pH/ORP sensors. Barben Performance Series sensors are compatible with all major manufacturers of pH analyzers and transmitters. Upgrade your analytical measurement without the hassle and expense of replacing costly field instruments.

Typical Process Applications

Many industrial processes shorten pH/ORP sensor lifespan. Barben Performance Series sensors excel in applications that may have the following characteristics:

- **H_2S (Sulfides)[1]**
- **High Ion-Strength Solutions**
- **Ammonia**
- **Heavy Metals [Ag, Pb, Hg][2]**
- **Strong Caustics**
- **Strong Acids**
- **High Cyclic Pressures**
- **High Temperature**
- **Proteins[1]**
- **Organics**
- **Mercaptans[1]**
- **Cyanides[1]**
- **Iodides[1]**
- **Bromines**

NOTES

1. *Chemicals that react with Ag^+ (Silver) and restrict traditional reference junction designs*
2. *Heavy metals which react with Cl^- (Chloride) and reduce the voltage potential of the sensor.*

Standard Sensor Technology

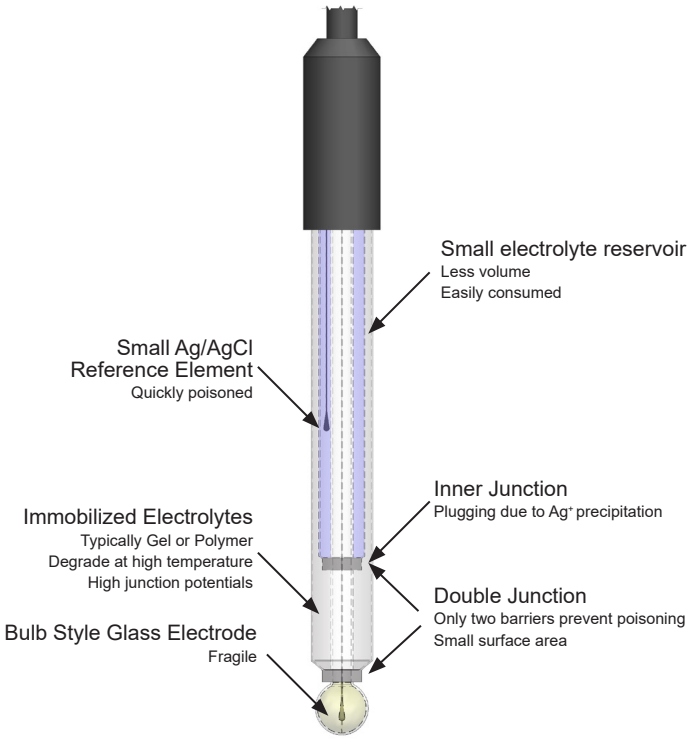

Figure 1

Barben Performance Series Sensor

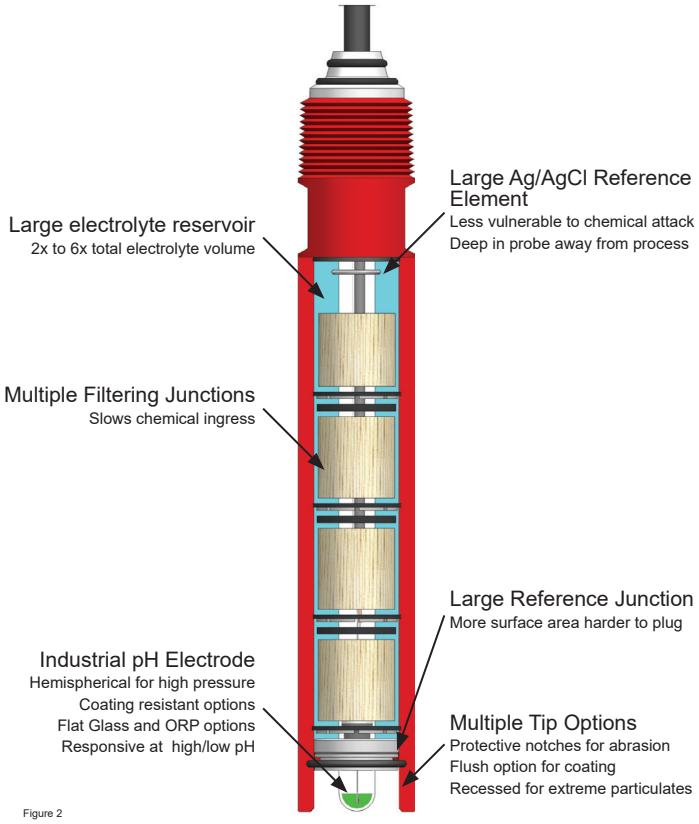

Figure 2

Industry Leading Reference Technology Axial Ion Path®

In 90% of industrial applications the reference cell is the cause of sensor failure. The typical industry standard "double junction" pH sensor (fig. 1) uses reference technology designed to minimize mixing of internal electrolyte and process liquid. This simplistic design is achieved by dividing the reference cell into two chambers, each protected with a porous junction. Once process liquid penetrates each junction, poisoning of the sensor may occur or the measurement signal may be impeded by plugging of the porous junction.

The Barben sensor (fig. 2) has a unique, patented reference cell design which combats these common problems.

Performance Series sensor's reference technology utilizes multiple innovations within the reference cell to greatly extend sensor life.

- Multiple annular wood filtering junctions
- Axial Ion Path® Communication Disks
- Large volume of electrolyte
- Large surface area Ag/AgCl reference element
- Teflon junction

Each sensor uses multiple "solid-state" annular wood filtering junctions. Wood's natural cellular makeup greatly slows the ingress of process liquid into the sensor. Each wood filtering junction chamber is separated by patented Axial Ion Path® communication disks. The communication disk seals each chamber while providing multiple electrolyte paths thus ensuring a reliable measurement signal.

Barben Performance Series sensors contain a much higher volume of KCl electrolyte than typically found in double junction sensors. More electrolyte provides on-going insurance against the leaching effects of fluctuating process pressure and temperature.

An oversized Ag/AgCl reference element is located near the rear of the sensor. This innovation serves two purposes. Distancing the reference element far from the sensor tip keeps it away from process chemicals. Over time, if chemicals such as sulfides were to penetrate within the sensor, then the large reference element is capable of withstanding long-term poisoning while maintaining a stable measurement.

As a final preventative measure, a porous Teflon insert placed at the tip of the sensor provides a large surface area to prevent plugging. Teflon also serves as a great initial barrier to chemical attack. All of these features combine to make the Performance Series sensors the best choice for industrial measurement applications.

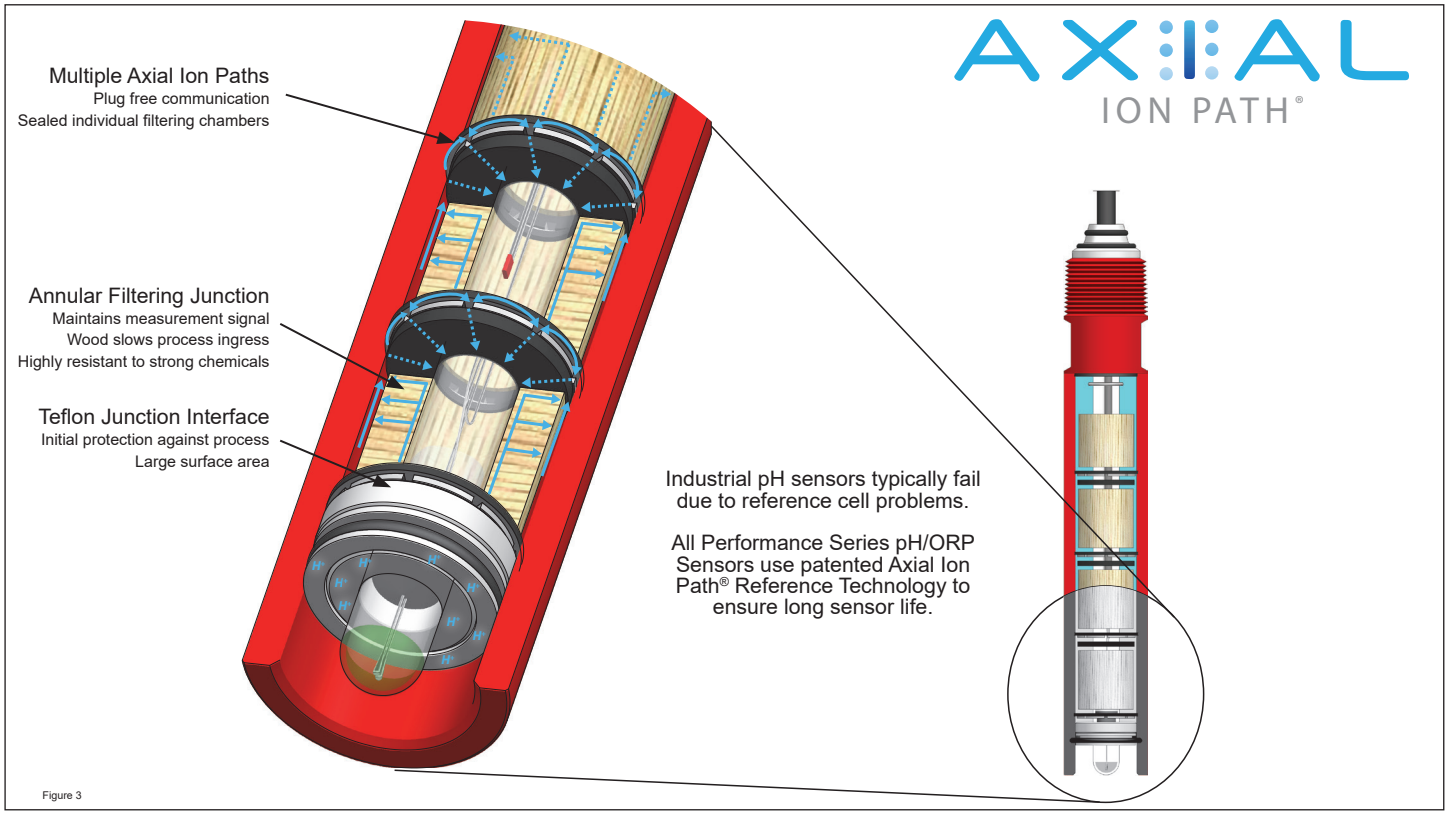

Figure 3

Performance Series
pH/ORP Sensors with CRN Registration

Low Noise, High Temperature Cable

Since Performance Series sensors are often mounted directly into the process, all products are manufactured with proprietary low-noise, high temperature cable. Competitive designs may use low-temperature cable to reduce signal noise (thus de-rating the sensor). Alternately, when high temperature cable is improperly specified, triboelectric noise can cause signal error. Barben Analytical has developed a proprietary cable that can withstand 130°C (266°F) process temperatures while providing stable pH measurement.

Specialized Glass Formulations and Configurations

Barben glass pH measurement electrodes are designed with unique formulations to prevent coating and scaling. Additional coating resistant options further improve lifespan in strong caustic (NaOH) and silica applications. These specialty glass formulations are manufactured to precision impedance ranges to ensure the best balance between high strength signal, speed of response, structural integrity under high pressure, long life in high temperatures and extreme acid and caustic pH conditions. Unique billet style ORP electrodes completely eliminate glass from the process thus further eliminating potential breakage.

Industrial Grade Mounting Options and Accessories

Barben Analytical provides a comprehensive offering of CRN rated accessories to ensure convenient, safe and economical installation into your applications. In-line, submersible and hot tap (retractable through a isolation ball valve) are all standard options. In-line sensors with quick change “Nut Lock” adapters, rated to 286 psig, allow for easy access for calibration or maintenance in an isolated sample stream. Hot-Tap or ball-valve retraction systems, rated to 300 psig allow for direct use into process without the need for sample or bypass lines. We offer CRN stamped hardware in 316 Stainless, Titanium and Hastelloy C-276, Sensor bodies in Kynar (PVDF) with elastomer seal options in Viton® Extreme™, EPDM, and FFKM (Kalrez) to meet the specific demands of your process.

Interconnection with Existing pH and ORP Analyzers

Performance Series sensors are compatible with all major manufacturer’s pH analyzers with voltage input. Temperature compensation options for PT100, PT1000, 3kΩ (Balco), and 8550Ω (Honeywell) ensure full compatibility with existing analyzers. Now you can upgrade your process without replacing your field instrument. Wiring diagrams for many analyzers can be found at BarbenAnalytical.com.

Sensor Selection: Mounting

The first consideration when selecting a pH sensor is how will it be mounted into the process. Examples of various process mounting configurations are provided below.

In-line Sensor Mounting: In-line installations are common on sample streams off the main process. Isolation valves should be upstream / downstream of sensor for removal.

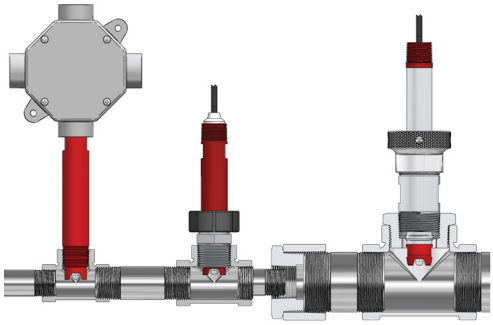

Hot Tap Sensor Mounting: Hot Tap refers to the ability to remove the sensor from the process while under pressure. A ball valve is used to isolate the sensor for removal.

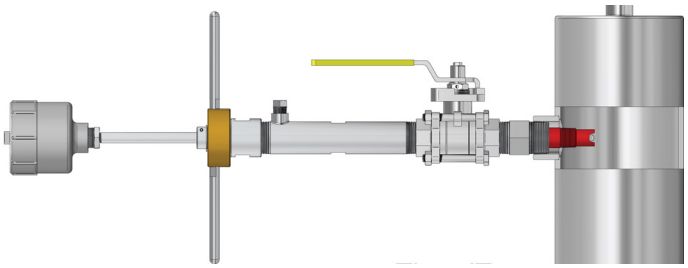

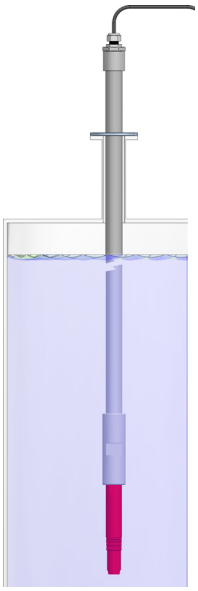

Submersible Sensor Mounting: Submersible mounting installations are required when the measurement is needed directly into a tank, reactor vessel or open channel. Typically the sensor must be mounted on a “dip tube” which is the hardware to submerge the sensor in the application.

Sensor Selection: Electrode Options

Code	Glass Type	Suggested Applications	Recommended Measurement Range	Recommended Temp Range	Maximum Temp Range
R CR	Industrial High Temp (Hemi) Industrial High Temp Coat Resist (Hemi)	Best choice for hi/low pH & high pressure. Coat resistant excels in NaOH. Hemispherical glass.	0 to 14 pH	15 to 100°C 59 to 212°F	15 to 130°C 59 to 266°F
FG CF	Flat Industrial Glass Flat Industrial Glass Coat Resist	Best choice for in-line slurries. Consult if rapid pressure changes are present.	0 to 14 pH	20 to 85°C 68 to 185°F	20 to 130°C 68 to 266°F
PX	Redox (ORP)	Flat Platinum (Pt) Billet. Non-glass. Easy to clean.	0 to ±1500mV	0 to 130°C 32 to 266°F	0 to 130°C 32 to 266°F
E CE	General Purpose General Purpose Coating Resist	Light to medium duty pH electrode for low temperature applications. Not for high pH.	2 to 11 pH	-10 to 40°C 14 to 104°F	-20 to 50°C -4 to 122°F
FR	Fluoride / HF Acid (Hemi)	Resistant to etching by HF and other strong acids. Hemispherical pH glass.	1 to 14 pH	15 to 100°C 59 to 212°F	15 to 130°C 59 to 266°F
HR	Silica Resistant High Temp (Hemi)	Best choice for extreme pH where silica may coat traditional electrodes. Hemispherical glass.	1 to 14 pH	15 to 100°C 59 to 212°F	15 to 130°C 59 to 266°F
FH	Silica Resistant Flat Glass	Best choice for slurries and heavy fouling where silica may coat traditional glass electrodes.	1 to 14 pH	15 to 85°C 59 to 185°F	15 to 130°C 59 to 266°F

= Most common electrodes

= Special Application (Consult with factory)

Sensor Selection: Additional Options

Temperature Compensation

- PT100 RTD
- PT1000 RTD
- 3.01K Ohm RTD Balco (ABB, TBI-Bailey)
- 8550 Ohm (Honeywell / Leeds & Northrup)

Sensor Body Material

- Kynar PVDF: *Red or white based on model*

Sensor O-Ring Material

- Viton® Extreme™ ETP-600S
- EPDM
- FFKM (perfluoro-elastomer: i.e. Kalrez)

Sensor Tip Examples

Notched Tip Flat Glass

Flush Tip Flat Glass

Flush Tip Redox (ORP)

Notched Tip Hemispherical Glass

Flush Tip Hemispherical Glass

When selecting the sensor tip consider the process. Notches protect against breakage from heavy particulates. Flush tips are effective for soft coatings. For extreme abrasion a recessed tip can be offered *(not shown)*.

Figure 4

Sensor Wiring Termination Examples

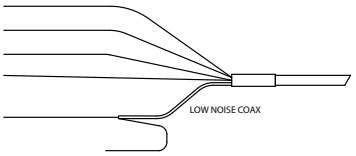

Tinned Leads: This option is commonly specified when the sensor is directly wired to the analyzer

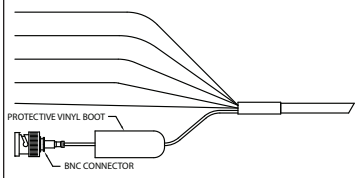

BNC Connector: BNC's offer a low impedance connector to the coaxial wire carrying the pH signal. It is often used when the sensor will connect to an extension cable.

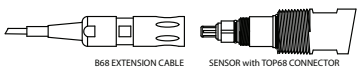

TOP68: The industry standard TOP68 connector provides a quick disconnect option at the sensor.

Figure 5

Performance Series
pH/ORP Sensors with CRN Registration

Model 546
Threaded In-line, Submersible, High Pressure Hot Tap

The versatile Model 546 is suitable for in-line sample stream applications using the 3/4 inch NPT process connection. A similar connection on the rear of the sensor is used to mount the sensor in submersible and high pressure hot tap installations. With tip lengths from 0.5 to 3.5 inches the 546 sensor can fit through extended pipe nipples and flanges to reach into the process and provide optimum pH/ORP measurement.

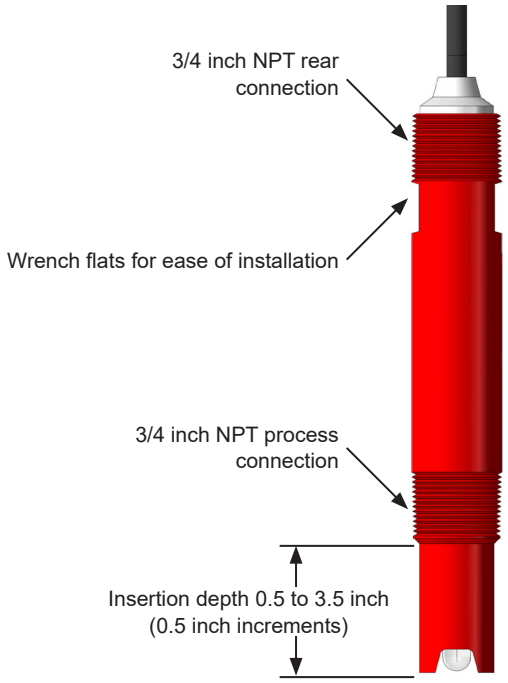

CRN Registration Canada
0F16420.2C

Maximum Allowable Working Pressure / Temperature*
In-line: 150 PSIG @ -4 to 266°F (-20 to 130°C)
Hot Tap: 300 PSIG @ -4 to 131°F (-20 to 55°C)
290 PSIG @ 131 to 194°F (55 to 90°C)
230 PSIG @ 194 to 266°F (90 to 130°C)

* MAWP based on min design temperature to max temperature listed.

Minimum Design Temperature
-4°F (-20°C)

546 In-line Installation

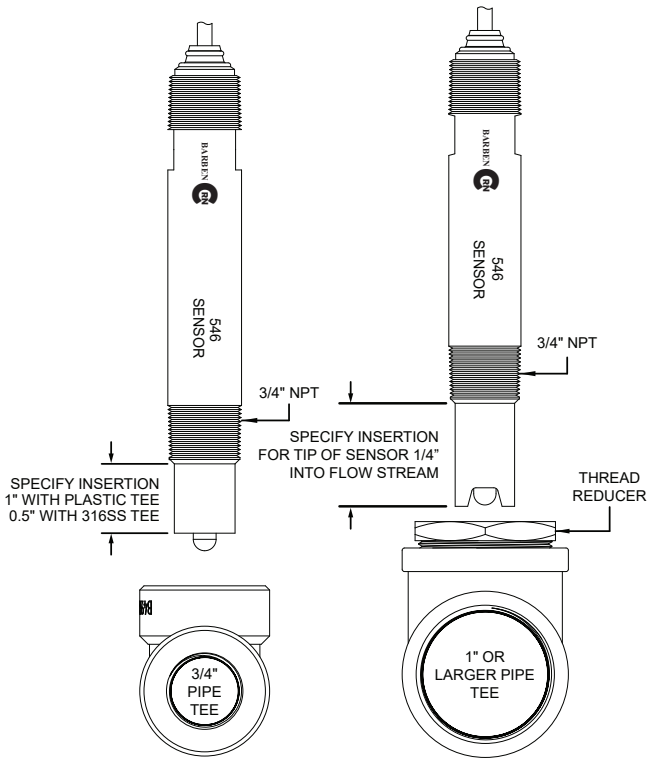

Figure 6

546 High Pressure Hot Tap Installation

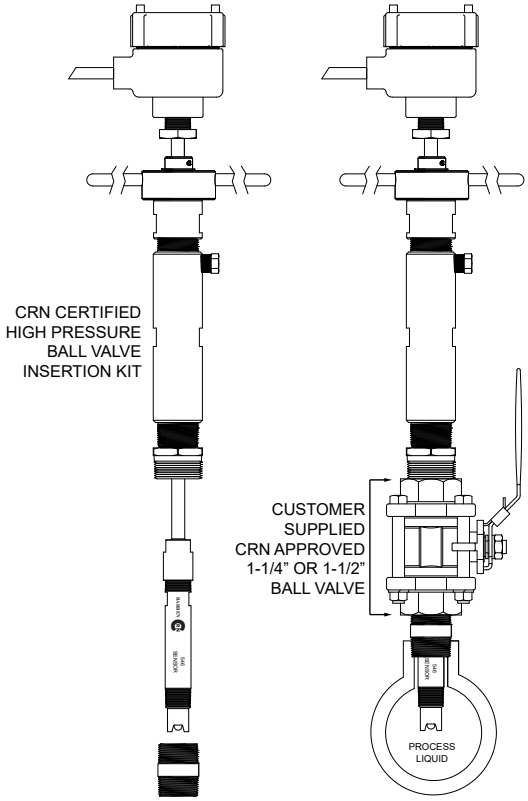

Figure 7

Model 546 Sensor Options

Label	Axial Ion Path	Body	Electrode	Tip	TC	Body Options	Insertion Depth	Cable	Reference Wire	Terminations	
A	CRN Marked Product										
	O-Ring Seal Material										
	V	Viton® Extreme™ ETP-600S									
	E	EPDM									
	K	FFKM (perfluoro-elastomer)									
		Body Style									
		546	3/4" MNPT Threaded Kynar 740 PVDF Body								
			Measuring Electrode								
			R	Ruggedized, Hemi-glass (0 - 14 pH) 15 to 130°C (59 to 266°F)							
			E	Low Temp Hemi-glass (2 - 11 pH) -20 to 50°C (-4 to 122°F)							
			CE	Coating Resistant, Low Temp Hemi-glass (2 - 11 pH) -20 to 50°C (-4 to 122°F)							
			CF	Coating Resistant, Ruggedized, Flat-glass (0 - 14 pH) 20 to 130°C (68 to 266°F)							
			CR	Coating Resistant, Ruggedized, Hemi-glass (0 - 14 pH) 15 to 130°C (59 to 266°F)							
			FG	Ruggedized, Flat-glass (0 - 14 pH) 20 to 130°C (68 to 266°F)							
			FR	Hydroflouric Acid Resistant, Ruggedized, Hemi-glass (1 - 14 pH) 15 to 130°C (59 to 266°F)							
			FH	Silica Resistant Coating, Ruggedized, Flat-glass (1 - 14 pH) 20 to 130°C (68 to 266°F)							
			HR	Silica Resistant Coating, Ruggedized, Hemi-glass (1 - 14 pH) 15 to 130°C (59 to 266°F)							
			PX	Platinum ORP, Flat Solid Billet (0 to +/-1500 mV) 0 to 130°C (32 to 266°F)							
				Tip Configuration with Teflon Liquid Junction							
				FT	Flush no tip protection						
				DT	Dual Notch						
					Temperature Compensation (TC)						
					N	None					
					B	Balco 3.01K Ohm (2 Wire)					
					C	PT100 RTD (3 Wire)					
					H	Honeywell 8550 ohm (2 Wire)					
					K	PT1000 RTD (3 Wire)					
						Body Options					
						S	Standard Body 546				
						C	High pressure certification				
							Insertion Depth from small end of front pipe thread to front of body				
							0.5	0.5"			
							1.0	1.0"			
							1.5	1.5"			
							2.0	2.0"			
							2.5	2.5"			
							3.0	3.0"			
							3.5	3.5"			
								Cable Configuration - High Temperature, Low Noise TPE Jacket			
								JB	Junction Box Preinstalled (for use with B39 Extension cable when complete assembly is specified)		
								T	8" Pigtail - for use with junction box		
								T3	8" Pigtail for High Pressure Hot Tap		
								PH	TOP68 Quick Disconnect Plug Head **(PT100 Temp Compensation Only)**		
								1 to 5	1' to 5' - Standard		
								6 to 15	6' to 15'		
								16 to 30	16' to 30'		
								31 to 100	**Longer lengths available. Consult factory for installation, application and leadtime. For lengths >30 feet, please consider Junction Box, Extension Cable and possible pre-amp.**		
									Reference Wire		
									C	Reference wire on coax shield **(Common with BNC leads used with B39 Ext Cables)**	
									E	Reference on separate wire **(Best choice for direct wiring to analyzers)**	
									X	Placeholder when Cable Configuration = PH	
										Lead Terminations	
										BT	BNC (with tinned wires if sensor has temp comp)
										BL	BNC (with #6 spade lug wires if sensor has temp comp)
										B2	BNC (with Molex for temp comp; use with B39 Ext Cables)
										TT	All tinned lead wires
										LL	All #6 spade lug wires
										PT	TOP68 Quick Disconnect Plug Tail on cable
										PP	All wire ferrules
										X	Placeholder when Cable Configuration = PH
Mtl	AIP	Body	Elec	Tip	TC	Opt	Depth	Cable	Ref	Term	
A	**V**	**546**	**R**	**DT**	**C**	**S**	**0.5**	**15**	**E**	**TT**	**Typical Sensor Configuration**

546 High Pressure Hot Tap Accessories

Part Number (use with 1-1/4" valves)	Part Number (use with 1-1/2" valves)	Accessory Description
AB5104K-S125V	AB5104K-S150V	316 Stainless Steel Kit with Viton Seals
AB5104K-S125E	AB5104K-S150E	316 Stainless Steel Kit with EPDM Seals
AB5104K-S125K	AB5104K-S150K	316 Stainless Steel Kit with FFKM (Kalrez) Seals
AB5104K-T125V	AB5104K-T150V	Titanium Grade 2 Kit with Viton Seals
AB5104K-T125E	AB5104K-T150E	Titanium Grade 2 Kit with EPDM Seals
AB5104K-T125K	AB5104K-T150K	Titanium Grade 2 Kit with FFKM (Kalrez) Seals

Performance Series
pH/ORP Sensors with CRN Registration

Model 551
Quick Change In-line

In some in-line applications sensor removal for routine cleaning or calibration becomes difficult due to conduit or cabling. The 551 Quick Change Sensor offers a unique method to extract the sensor through a “Nut Lock” Adapter system. The Nut Lock Adapter threads directly into 1 inch NPT process connections. The 551 sensor also includes a 3/4 inch rear connection for use in submersible applications.

CRN Registration Canada
0F16420.2C

Maximum Allowable Working Pressure / Temperature*
286 PSIG @ -4 to 131°F (-20 to 55°C)
264 PSIG @ 131 to 194°F (55 to 90°C)
239 PSIG @ 194 to 266°F (90 to 130°C)
* MAWP based on min design temperature to max temperature listed.

Minimum Design Temperature
-4°F (-20°C)

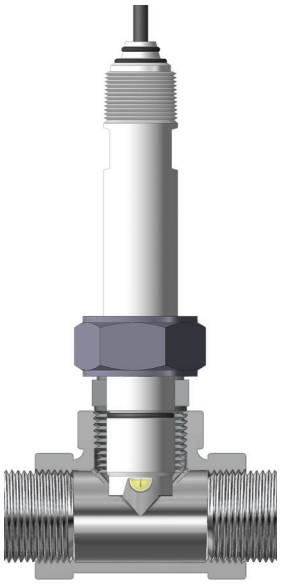

551 with Nut Lock Adapter mounted in 1 inch pipe tee

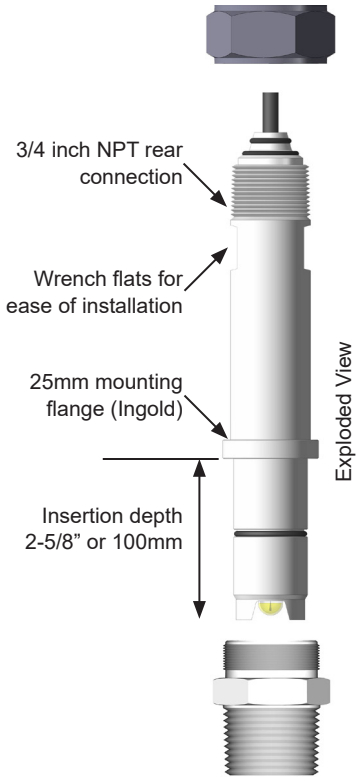

551 In-Line Installation

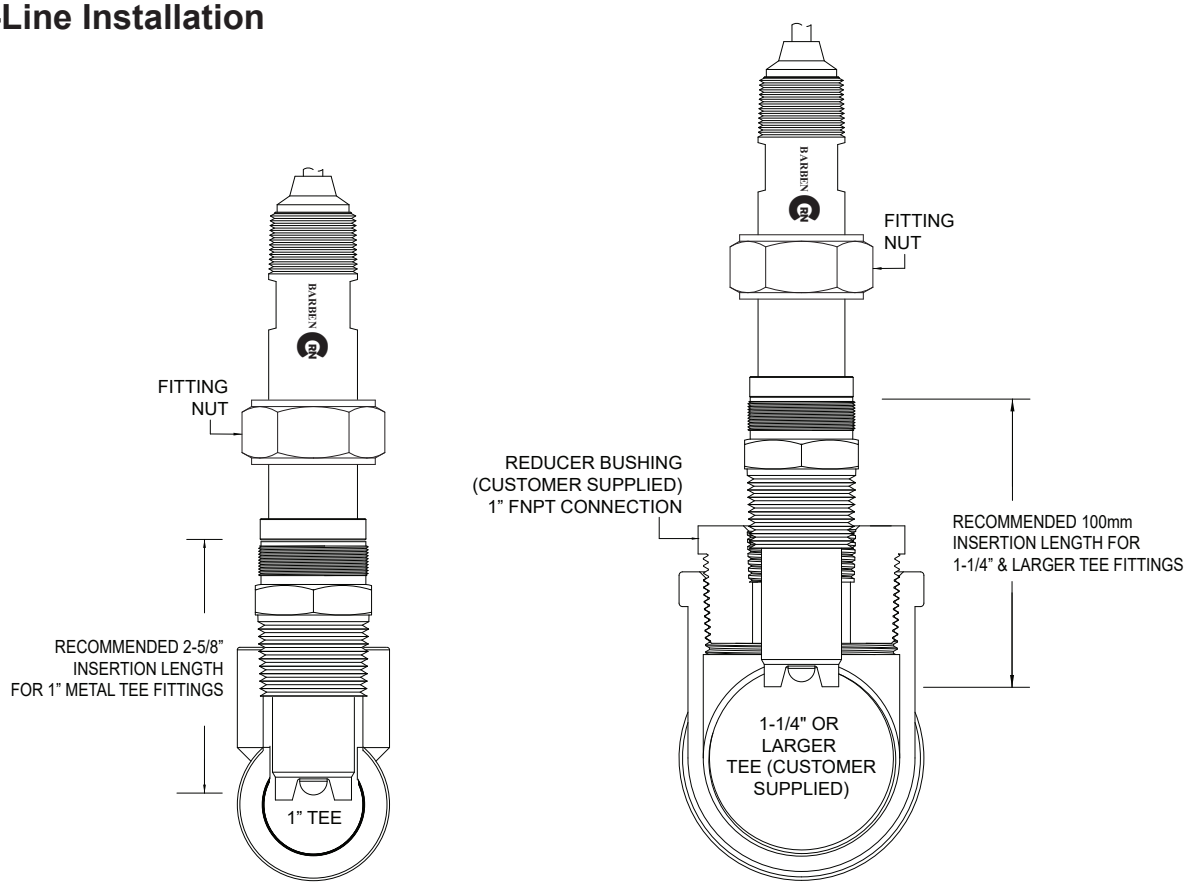

Figure 8

551 Quick Change In-line pH / ORP Sensors

Label	Axial Ion Path	Body	Electrode	Tip	TC	Body Options	Insertion Depth	Cable	Reference Wire	Terminations	
A	CRN Marked Product										
	O-Ring Seal Material										
	V	Viton® Extreme™ ETP-600S									
	E	EPDM									
	K	FFKM (perfluoro-elastomer)									
		Body Configuration									
		551	Quick-Change Inline, Kynar 740 PVDF Body								
			Measuring Electrode								
			R	Ruggedized, Hemi-glass (0 - 14 pH) 15 to 130°C (59 to 266°F)							
			E	Low Temp Hemi-glass (2 - 11 pH) -20 to 50°C (-4 to 122°F)							
			CE	Coating Resistant, Low Temp Hemi-glass (2 - 11 pH) -20 to 50°C (-4 to 122°F)							
			CF	Coating Resistant, Ruggedized, Flat-glass (0 - 14 pH) 20 to 130°C (68 to 266°F)							
			CR	Coating Resistant, Ruggedized, Hemi-glass (0 - 14 pH) 15 to 130°C (59 to 266°F)							
			FG	Ruggedized, Flat-glass (0 - 14 pH) 20 to 130°C (68 to 266°F)							
			FR	Hydroflouric Acid Resistant, Ruggedized, Hemi-glass (1 - 14 pH) 15 to 130°C (59 to 266°F)							
			FH	Silica Resistant Coating, Ruggedized, Flat-glass (1 - 14 pH) 20 to 130°C (68 to 266°F)							
			HR	Silica Resistant Coating, Ruggedized, Hemi-glass (1 - 14 pH) 15 to 130°C (59 to 266°F)							
			PX	Platinum ORP, Flat Solid Billet (0 to +/-1500 mV) 0 to 130°C (32 to 266°F)							
				Tip Configuration with Teflon Liquid Junction							
				FT	Flush with no tip protection						
				DT	Dual Notch						
				ST	Recessed Tip						
					Temperature Compensation (TC)						
					N	None					
					B	Balco 3.01K Ohm (2 Wire)					
					C	PT100 RTD (3 Wire)					
					H	Honeywell 8550 ohm (2 Wire)					
					K	PT1000 RTD (3 Wire)					
						Body Options					
						S	Standard Body 551				
							Insertion Depth from Rib to Front of Body				
							N	Standard (2.625" from rib)			
							100	100mm			
								Cable Configuration - High Temperature, Low Noise TPE Jacket			
								JB	Junction Box Preinstalled (for use with B39 Extension cable when complete assembly is specified)		
								T	8" Pigtail - for use with junction box		
								PH	TOP68 Quick Disconnect Plug Head**(PT100 Temp Compensation Only)**		
								1 to 5	1' to 5' - Standard		
								6 to 15	6' to 15'		
								16 to 30	16' to 30'		
								31 to 100	**Longer lengths available. Consult factory for installation, application and leadtime. For lengths >30 feet, please consider Junction Box, Extension Cable and possible pre-amp.**		
									Reference Wire		
									C	Reference wire on coax shield**(Common with BNC leads used with B39 Ext Cables)**	
									E	Reference on separate wire**(Best choice for direct wiring to analyzers)**	
									X	Placeholder when Cable Configuration = PH	
										Lead Terminations	
										BT	BNC (with tinned wires if sensor has temp comp)
										BL	BNC (with #6 spade lug wires if sensor has temp comp)
										B2	BNC (with Molex for temp comp; use with B39 Ext Cables)
										TT	All tinned lead wires
										LL	All #6 spade lug wires
										PT	TOP68 Quick Disconnect Plug Tail on cable
										PP	All wire ferrules
										X	Placeholder when Cable Configuration = PH
Mtl	AIP	Body	Elec	Tip	TC	Opt	Depth	Cable	Ref	Term	
A	**V**	**551**	**R**	**DT**	**C**	**S**	**N**	**15**	**E**	**TT**	**Typical Sensor Configuration**

551 Nut Lock Adapter Accessories

Part Number	Description	Specification
AB4954-0022	Nut Lock Adapter, 316 Stainless Steel, 1" MNPT Mounting Thread	ASTM A276 316 (Body), ASTM A479 316 (Nut)
AB4954-0036	Nut Lock Adapter, Titanium Grade 2 (wetted), 1" MNPT Mounting Thread	UNS N10276 (Body), ASTM A479 316 (Nut)
AB4954-0040	Nut Lock Adapter, Hastelloy C-276 (wetted), 1" MNPT Mounting Thread	ASTM B348 (Body), ASTM A479 316 (Nut)

Performance Series
pH/ORP Sensors with CRN Registration

Model 547
Hot Tap Retractable

The Model 547 is a replaceable, cartridge style sensor. The sensor is fitted into a metallic sheath which is installed into an isolation valve assembly. This design is ideal for applications where measurement on a sample line is not desirable. When the sensor is removed for cleaning or calibration the valve can be used for isolation from the process. When sensor replacement is needed all metallic hardware is fully reusable thus saving money with on-going replacement expense.

CRN Registration Canada
0F16420.2C

BARBEN CRN

Maximum Allowable Working Pressure / Temperature*
Operating: 150 PSIG @ -4 to 266°F (-20 to 130°C)
Service: 65 PSIG recommended for retraction/insertion
* MAWP based on min design temperature to max temperature listed.

Minimum Design Temperature
-4°F (-20°C)

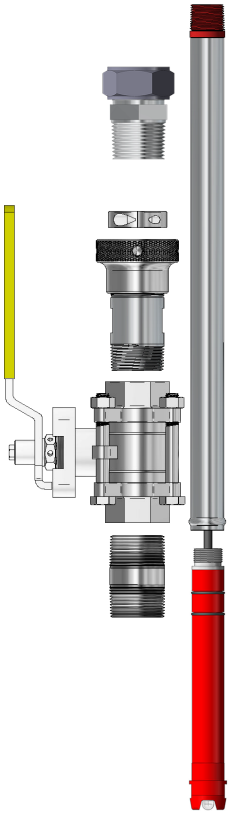

Exploded view with ball valve assembly and compression fitting

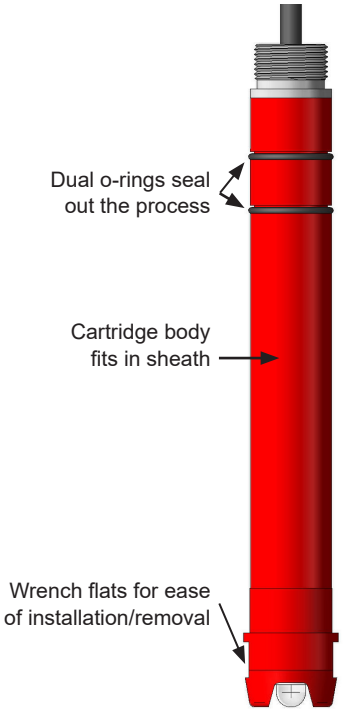

547 replacement pH/ORP cartridge style sensor

547 Hot Tap Installation

Figure 9

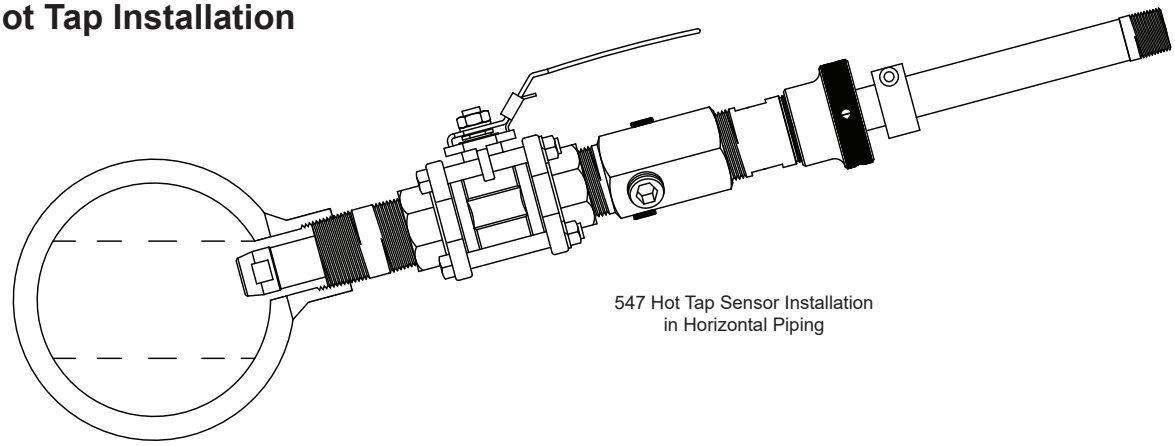

547 Hot Tap Sensor Installation in Horizontal Piping

547 In-line Sizing Example

Insertion Depth = (A) - (B) - (C)

The insertion depth should exceed any mounting hardware (flange, standoff or thread-o-let) plus the pipe wall thickness by at least 1/4" (6mm) to get the tip of the sensor into the process.

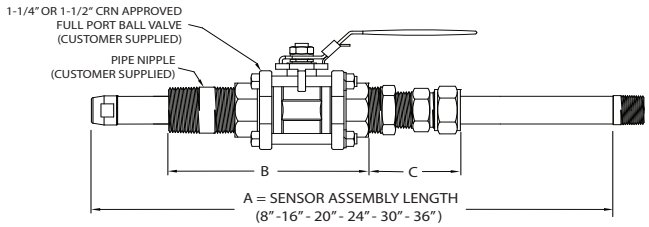

Valve & Nipple (Customer Supplied)	"B" Estimate	Compression Fitting	"C" Estimate
1-1/4" SS Valve	6.5"	Wrench Tight	3.0"
		Hand Tight	3.5"
1-1/2" SS Valve	7.1"	Wrench Tight	3.0"
		Hand Tight	4.5"
1-1/4" Kynar Valve	8.0"	Wrench Tight	3.0"
		Hand Tight	3.5"
1-1/2" Kynar Valve	8.6"	Wrench Tight	3.0"
		Hand Tight	4.5"

547 Hot Tap Retractable pH / ORP Sensors

Label	Axial Ion Path	Body	Electrode	Tip	TC	Body Options	Insertion Depth	Cable	Reference Wire	Terminations	
A	CRN Marked Product										
	O-Ring Seal Material										
	V	Viton® Extreme™ ETP-600S									
	E	EPDM									
	K	FFKM (perfluoro-elastomer)									
		Body Configuration									
		547	Cartridge Style Sensor, Kynar 740 PVDF Body								
			Measuring Electrode								
			R	Ruggedized, Hemi-glass (0 - 14 pH) 15 to 130°C (59 to 266°F)							
			E	Low Temp Hemi-glass (2 - 11 pH) -20 to 50°C (-4 to 122°F)							
			CE	Coating Resistant, Low Temp Hemi-glass (2 - 11 pH) -20 to 50°C (-4 to 122°F)							
			CF	Coating Resistant, Ruggedized, Flat-glass (0 - 14 pH) 20 to 130°C (68 to 266°F)							
			CR	Coating Resistant, Ruggedized, Hemi-glass (0 - 14 pH) 15 to 130°C (59 to 266°F)							
			FG	Ruggedized, Flat-glass (0 - 14 pH) 20 to 130°C (68 to 266°F)							
			FR	Hydroflouric Acid Resistant, Ruggedized, Hemi-glass (1 - 14 pH) 15 to 130°C (59 to 266°F)							
			FH	Silica Resistant Coating, Ruggedized, Flat-glass (1 - 14 pH) 20 to 130°C (68 to 266°F)							
			HR	Silica Resistant Coating, Ruggedized, Hemi-glass (1 - 14 pH) 15 to 130°C (59 to 266°F)							
			PX	Platinum ORP, Flat Solid Billet (0 to +/-1500 mV) 0 to 130°C (32 to 266°F)							
				Tip Configuration with Teflon Liquid Junction							
				FT	Flush no tip protection						
				DT	Dual Notch						
					Temperature Compensation (TC)						
					N	None					
					B	Balco 3.01K Ohm (2 Wire)					
					C	PT100 RTD (3 Wire)					
					H	Honeywell 8550 ohm (2 Wire)					
					K	PT1000 RTD (3 Wire)					
						Body Options					
						S	Standard Body Replacement Sensor				
						C	High Pressure Certification Replacement Sensor				
						A	8 in. 316 Stainless Steel sheath				
						B	8 in. Titanium Grade 2 sheath				
						D	8 in. Hastelloy C sheath				
						E	16 in. 316 Stainless Steel sheath				
						F	16 in. Titanium Grade 2 sheath				
						G	16 in. Hastelloy C sheath				
						H	20 in. 316 Stainless Steel sheath				
						J	20 in. Titanium Grade 2 sheath				
						K	20 in. Hastelloy C sheath				
						L	24 in. 316 Stainless Steel sheath				
						M	24 in. Titanium Grade 2 sheath				
						N	24 in. Hastelloy C sheath				
						P	30 in. 316 Stainless Steel sheath				
						Q	30 in. Titanium Grade 2 sheath				
						R	30 in. Hastelloy C sheath				
						T	36 in. 316 Stainless Steel sheath				
						U	36 in. Titanium Grade 2 sheath				
						V	36 in. Hastelloy C sheath				
						W	60 in. 316 Stainless Steel sheath				
						X	60 in. Titanium Grade 2 sheath				
						Y	60 in. Hastelloy C sheath				
							Accessory Hardware (Sensor O-Ring Material aboves determines Assessory Hardware Material)				
							N	Standard Replacement Sensor Cartridge			
							1	1" SS316 Wrench Tight Compression Fitting (AB4954-0001V, E, K)			
							2	1" SS316 Wrench Tight Compression Fitting + Clean-Cal-Purge Fitting 1-1/4" MNPT			
							3	1" SS316 Wrench Tight Compression Fitting + Clean-Cal-Purge Fitting 1-1/2" MNPT			
							4	1" Titanium Grade 2 Wrench Tight Compression Fitting (AB4954-0009V, E, K)			
							5	1" Titanium Grade 2 Wrench Tight Compression Fitting + Clean-Cal-Purge Fitting 1-1/4" MNPT			
							6	1" Titanium Grade 2 Wrench Tight Compression Fitting + Clean-Cal-Purge Fitting 1-1/2" MNPT			
							7	1" Hastelloy C Wrench Tight Compression Fitting AB4954-0002V, E, K)			
							8	1-1/4" SS316 Hand Tight Compression Fitting (AB4954-0003V, E, K)			
							9	1-1/4" SS316 Hand Tight Compression Fitting + Clean-Cal-Purge Fitting 1-1/4" MNPT			
							A	1-1/4" SS316 Hand Tight Compression Fitting + Clean-Cal-Purge Fitting 1-1/2" MNPT			
							B	1-1/4" Titanium Grade 2 Hand Tight Compression Fitting (AB4954-0005V, E, K)			
							C	1-1/4" Titanium Grade 2 Hand Tight Compression Fitting + Clean-Cal-Purge Fitting 1-1/4" MNPT			
							D	1-1/4" Hastelloy C Hand Tight Compression Fitting (AB4954-0004V, E, K)			
								Cable Configuration - High Temperature, Low Noise TPE Jacket			
								JB	Junction Box (for use with B39 Extension cable when complete assembly is specified)		
								T1	8" Pigtail for (8" assy or High Pressure or SS Flow Cell)		
								T2	8" Pigtail for (16" assy)		
								T3	8" Pigtail for (20" assy)		
								T4	8" Pigtail for (24" assy)		
								T5	8" Pigtail for (30" assy)		
								T6	8" Pigtail for (36" assy)		
								1 to 5	1' to 5' - Standard		
								6 to 15	6' to 15'		
								16 to 30	16' to 30'		
								31 to 100	**Longer lengths available. Consult factory for information and leadtime. For lengths >30 feet, please consider Junction Box, Extension Cable and possible pre-amp.**		
									Reference Wire		
									C	Reference wire on coax shield **(Common with BNC leads used with B39 Ext Cables)**	
									E	Reference on separate wire **(Best choice for direct wiring to analyzers)**	
										Lead Terminations	
										BT	BNC (with tinned wires if sensor has temp comp)
										BL	BNC (with #6 spade lug wires if sensor has temp comp)
										B2	BNC (with Molex for temp comp; use with B39 Ext Cables)
										TT	All Tinned Lead wires
										LL	All #6 Spade Lug wires
										PT	TOP68 Quick Disconnect Plug Tail on cable
										PP	All wire ferrules
Mtl	AIP	Body	Elec	Tip	TC	Opt	Depth	Cable	Ref	Term	
A	**V**	**547**	**R**	**DT**	**C**	**S**	**N**	**15**	**E**	**TT**	**Typical Sensor Configuration**

Performance Series
pH/ORP Sensors with CRN Registration

547 Hot Tap Accessories

CRN Sheath Kits for 547 Cartridge Style Sensors			
316SS Part #	**Titanium Part #**	**Hastelloy C-276 Part #**	**Description**
AB5104-0068V	AB5104-0058V	AB5104-0078V	8" Kit, Kynar Backpiece with Viton Seals (non-wetted)
AB5104-0216V	AB5104-0116V	AB5104-0316V	16" Kit, Kynar Backpiece with Viton Seals (non-wetted)
AB5104-0220V	AB5104-0120V	AB5104-0320V	20" Kit, Kynar Backpiece with Viton Seals (non-wetted)
AB5104-0224V	AB5104-0124V	AB5104-0324V	24" Kit, Kynar Backpiece with Viton Seals (non-wetted)
AB5104-0230V	AB5104-0130V	AB5104-0330V	30" Kit, Kynar Backpiece with Viton Seals (non-wetted)
AB5104-0236V	AB5104-0136V	AB5104-0336V	36" Kit, Kynar Backpiece with Viton Seals (non-wetted)

CRN Wrench Tight Compression Fittings for 547 Cartridge Style Sensors *(Works with all sheath kits listed above)*			
316SS Part #	**Titanium Part #**	**Hastelloy C-276 Part #**	**Description**
AB4954-0001V	AB4954-0009V	AB4954-0002V	Wrench Tight Compression Fitting with Viton Seal, 1" Male NPT
AB4954-0001E	AB4954-0009E	AB4954-0002E	Wrench Tight Compression Fitting with EPDM Seal, 1" Male NPT
AB4954-0001K	AB4954-0009K	AB4954-0002K	Wrench Tight Compression Fitting with FFKM (Kalrez) Seal, 1" Male NPT

CRN Hand Tight Compression Fittings for 547 Cartridge Style Sensors *(Works with all sheath kits listed above)*			
316SS Part #	**Titanium Part #**	**Hastelloy C-276 Part #**	**Description**
AB4954-0003V	AB4954-0005V	AB4954-0004V	Hand Tight Compression Fitting with Viton Seal, 1-1/4" Male NPT
AB4954-0003E	AB4954-0005E	AB4954-0004E	Hand Tight Compression Fitting with EPDM Seal, 1-1/4" Male NPT
AB4954-0003K	AB4954-0005K	AB4954-0004K	Hand Tight Compression Fitting with FFKM (Kalrez) Seal, 1-1/4" Male NPT

CRN Clean / Calibrate / Purge Fittings for 547 Cartridge Style Sensors *(Install between customer supplied isolation valve and related CRN compression fitting)*			
316SS Part #	**Titanium Part #**	**Hastelloy C-276 Part #**	**Description**
AB4954-0014	AB4954-0015		Clean / Calibrate / Purge Fitting with 3/8" ports, for Wrench Tight Compression fitting and 1-1/4" Female NPT isolation valve
AB4954-0023	AB4954-0024	AB4954-0018	Clean / Calibrate / Purge Fitting with 3/8" ports, for Wrench Tight Compression fitting and 1-1/2" Female NPT isolation valve
AB4954-0016	AB4954-0017	AB4954-0134	Clean / Calibrate / Purge Fitting with 3/8" ports, for Hand Tight Compression fitting and 1-1/4" Female NPT isolation valve
AB4954-0025	AB4954-0026	AB4954-0019	Clean / Calibrate / Purge Fitting with 3/8" ports, for Hand Tight Compression fitting and 1-1/2" Female NPT isolation valve

Adaptive Industrial Solutions

Your Barben Analytical Representative

For product information, application assistance,
or a quote, contact Adaptive Industrial Solutions.

Sales@adaptiveind.com

www.adaptiveind.com

Barben Analytical reserves the right to make technical changes or modify the contents of this document without prior notice. We reserve all rights in this document and in the subject matter and illustrations contained within.

Hastelloy® is a registered trademark of Haynes Intl Inc.
Viton® Extreme™ ETP-600S & Kalrez® are registered trademarks of DuPont Dow Elastomers
Kynar® is a registered trademark of Elf Atochem North America Inc.
Teflon® is a registered trademark of E.I. DuPont de Nemours Company Inc.

Accessories Guide
pH/ORP/Conductivity Sensors

Fittings and Accessories For Industrial Installations

- **Jet Cleaners and Scrubber Accessories**
- **Isolation Ball Valves Assemblies**
- **Compression Fittings and Sheath Sets**
- **High Pressure (2500 PSIG) Sensor Housings**
- **In-line Flow Cells**
- **Nut Lock Union Style Adapters**
- **Sensor Extension Cables**
- **Junction Boxes**

To get the most from your Performance Series Sensors use fittings and accessories direct from the manufacturer.

Barben Analytical offers a broad range of fittings and sensor cables to make sure your product will function properly in the application. Many process fittings are available in a variety of corrosion resistant metals as well as high performance plastics.

Accessories Guide
pH/ORP/Conductivity Sensors

Model 546
3/4 Inch NPT Threaded In-line, Submersible Accessories

JET CLEANER PRODUCTS - AIR OR LIQUID (546 sensor with 1.5" insertion depth required)	
SUBMERSIBLE JET CLEANER 2" MNPT THREAD MOUNT (DRAWING 2P0183)	
Part #	Description
C37	CPVC / SS316
B37	Kynar / Titanium
SUBMERSIBLE JET CLEANER WITH LIQUID TRAP FOR BATCH APPLICATIONS (DRAWING 2P0182)	
C37CT	CPVC / SS316 with liquid trap
B37KT	Kynar / Titanium with liquid trap
INLINE JET CLEANER 2" MNPT THREAD MOUNT FOR TEE MOUNTING (DRAWING 2P0184)	
C36	CPVC / SS316
B36	KYNAR / Titanium
FLOW CELLS FOR INLINE (C36 / B36) JET CLEANERS ABOVE	
B4951-0050	CPVC 2" FNPT Threaded Pipe Tee for C36
B4951-0051	Polypropylene 2" FNPT Threaded Pipe Tee for C36 or B36
B4951-0052	SS316 2" FNPT Threaded Pipe Tee for C36 or B36
B4951-0053	Kynar 2" FNPT Threaded Pipe Tee for B36
BRUSH SCRUBBER SUBMERSIBLE - SS FRAME WITH PLASTIC BRUSHES - AIR OR LIQUID DRIVEN (546 pH sensors with Hemispherical glass, Flush Junction, and 0.5" Insertion Depth Required) 45 PSIG WATER / 20 PSIG AIR REQ'D WHEN SUBMERSED - 35 PSIG AIR REQ'D NON-SUBMERSED	
SUBMERSIBLE BRUSH SCRUBBERS (DRAWING 2P0042)	
B38-B-V-N	Scrubber with Viton brushes
B38-B-E-N	Scrubber with EPDM brushes
SUBMERSIBLE BRUSH SCRUBBER MOUNTED IN PVC POT WITH NPT THREADED PORTS (DRAWING 2P0043)	
B38-B-V-P1	Viton brushes, 1" FNPT Threaded ports
B38-B-E-P1	EPDM brushes, 1" FNPT Threaded ports
B38-B-V-P2	Viton brushes, 2" FNPT Threaded ports
B38-B-E-P2	EPDM brushes, 2" FNPT Threaded ports
DISTRIBUTION VALVE FOR JET CLEANERS AND BRUSH SCRUBBERS ABOVE PVC WEATHERPROOF ENCLOSED SOLENOID VALVE (DRAWING 2P0181)	
B41-P-C	115VAC
B42-P-C	230VAC
B43-P-C	24VDC
TUBING FOR PLUMBING DISTRIBUTION VALVE TO JET CLEANERS/BRUSH SCRUBBERS	
B9213-0002	Polypropylene 1/4"OD X 1/8"ID

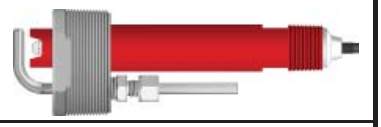

See Below for image

See Below for image

See Below for image

Brush Scrubber - Submersible

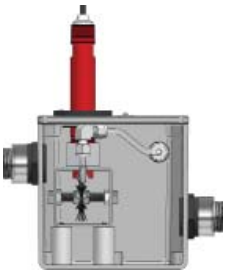

Brush Scrubber in Pot with NPT Ports

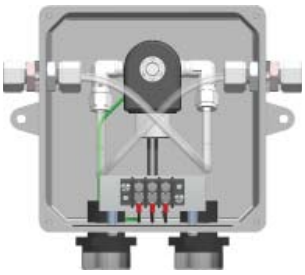

Distribution Valve

Images for reference only
Not to scale

Model 546
High Pressure Hot Tap Accessories

HIGH PRESSURE BALL-VALVE INSERTION SYSTEMS SS316 1-1/4" ASSEMBLIES WITH FACTORY SUPPLIED VALVE (DRAWING 2P0086)		
Part #	Description	
B5104-S125V	With Viton ORings	
B5104-S125E	With EPDM ORings	See Below for image
B5104-S125K	With Kalrez ORings	
KIT 1-1/4" (DRAWING 2P0087) (1-1/4" NPT FULL PORT BALL VALVE SUPPLIED BY END USER)		
B5104K-S125V	SS316 with Viton ORings, NO Valve	
B5104K-S125E	SS316 with EPDM ORings, NO Valve	
B5104K-S125K	SS316 with Kalrez ORings, NO Valve	See Below for image
B5104K-T125V	Titanium Gr. 2 with Viton ORings, NO Valve	
B5104K-T125E	Titanium Gr. 2 with EPDM ORings, NO Valve	
B5104K-T125K	Titanium Gr. 2 with Kalrez ORings, NO Valve	
KIT 1-1/2" (DRAWING 2P0088) (1-1/2" NPT FULL PORT BALL VALVE SUPPLIED BY END USER)		
B5104K-S150V	SS316 with Viton ORings, NO Valve	
B5104K-S150E	SS316 with EPDM ORings, NO Valve	
B5104K-S150K	SS316 with Kalrez ORings, NO Valve	See Below for image
B5104K-T150V	Titanium Gr. 2 with Viton ORings, NO Valve	
B5104K-T150E	Titanium Gr 2. with EPDM ORings, NO Valve	
B5104K-T150K	Titanium Gr. 2 with Kalrez ORings, NO Valve	
REPLACEMENT O-RINGS FOR HIGH PRESSURE INSERTION SYSTEMS		
B4904K-1009	EPDM ORings	
B4904K-1010	Kalrez ORings	
B4904K-1011	Viton ORings	

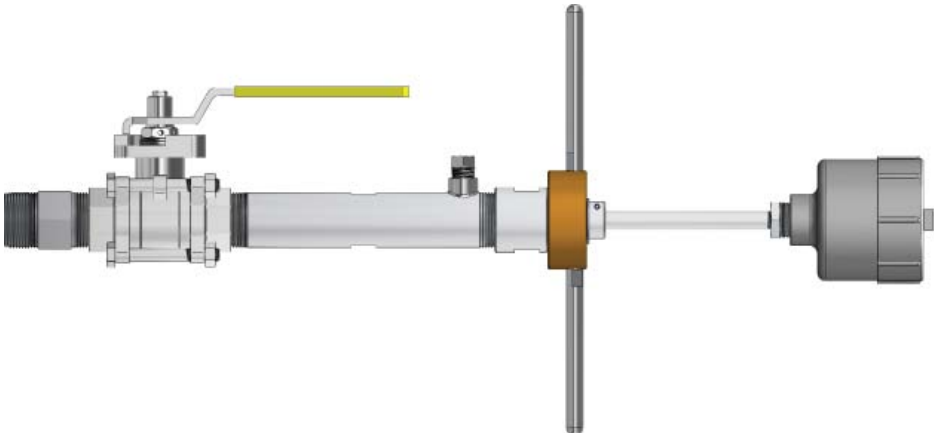

Complete assembly with factory supplied isolation ball valve (left)

Exploded View (below)

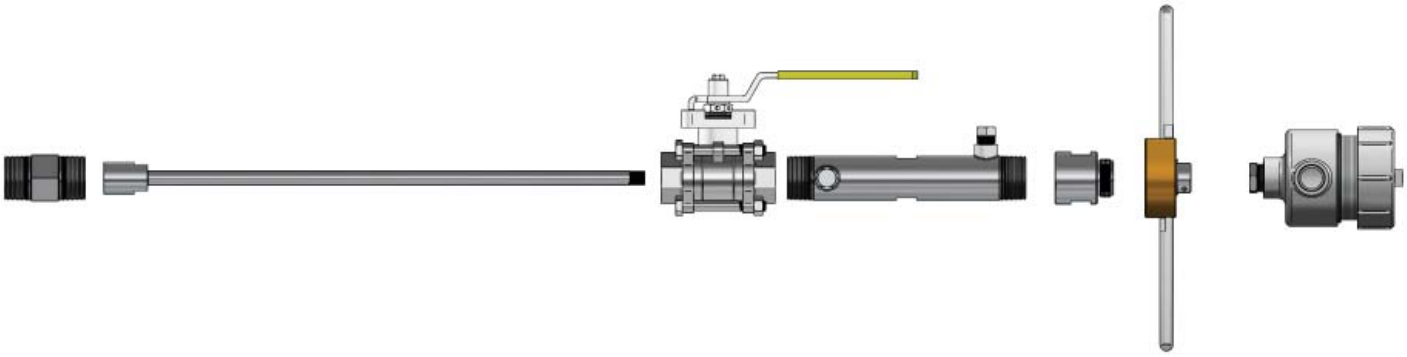

Accessories Guide
pH/ORP/Conductivity Sensors

Model 547
Hot Tap Retractable Accessories (Sheath Kits)

SHEATH SETS - INCLUDES OUTER SHEATH, KYNAR BACKPIECE, ORINGS (DRAWING 2A0160)					
Part #	Length	Part #	Length	Part #	Length
TITANIUM-KYNAR-VITON		**SS316-KYNAR-VITON**		**HASTELLOY C-KYNAR-VITON**	
B5104-0058V	8"	B5104-0068V	8"	B5104-0078V	8"
B5104-0116V	16"	B5104-0216V	16"	B5104-0316V	16"
B5104-0120V	20"	B5104-0220V	20"	B5104-0320V	20"
B5104-0124V	24"	B5104-0224V	24"	B5104-0324V	24"
B5104-0130V	30"	B5104-0230V	30"	B5104-0330V	30"
B5104-0136V	36"	B5104-0236V	36"	B5104-0336V	36"
B5104-0160V	60"	B5104-0260V	60"	B5104-0360V	60"
TITANIUM-KYNAR-EPDM		**SS316-KYNAR-EPDM**		**HASTELLOY C-KYNAR-EPDM**	
B5104-0058E	8"	B5104-0068E	8"	B5104-0078E	8"
B5104-0116E	16"	B5104-0216E	16"	B5104-0316E	16"
B5104-0120E	20"	B5104-0220E	20"	B5104-0320E	20"
B5104-0124E	24	B5104-0224E	24"	B5104-0324E	24"
B5104-0130E	30"	B5104-0230E	30"	B5104-0330E	30"
B5104-0136E	36"	B5104-0236E	36"	B5104-0336E	36"
B5104-0160E	60"	B5104-0260E	60"	B5104-0360E	60"
TITANIUM-KYNAR-KALREZ		**SS316-KYNAR-KALREZ**		**HASTELLOY C-KYNAR-KALREZ**	
B5104-0058K	8"	B5104-0068K	8"	B5104-0078K	8"
B5104-0116K	16"	B5104-0216K	16"	B5104-0316K	16"
B5104-0120K	20"	B5104-0220K	20"	B5104-0320K	20"
B5104-0124K	24"	B5104-0224K	24"	B5104-0324K	24"
B5104-0130K	30"	B5104-0230K	30"	B5104-0330K	30"
B5104-0136K	36"	B5104-0236K	36"	B5104-0336K	36"
B5104-0160K	60"	B5104-0260K	60"	B5104-0360K	60"

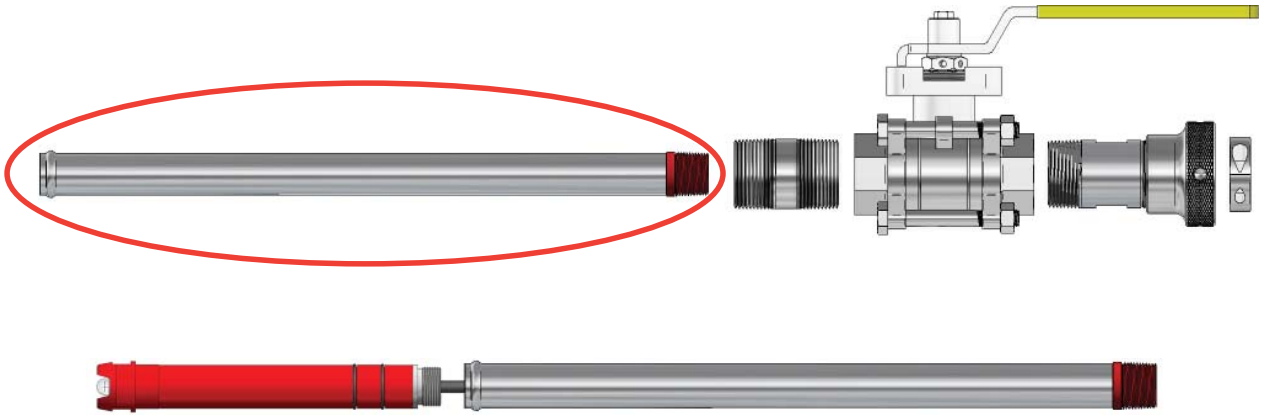

Sheath kit circled above. Additional hot tap hardware on following pages.
Each kit includes metallic sheath, Kynar backpiece, and o-ring seals (Kalrez, Viton or EPDM)

Model 547 / 567

Hot Tap Retractable Accessories (Valves Assemblies and Clean / Cal / Purge Fittings)

CLEAN-CALIBRATE-PURGE FITTING **Includes two 3/8"FNPT Thread Ports for Fill and Drain (DRAWING 2P0071)**		
SS316 Wrench Tight		
Part #	Description	
B4954-0014	1" FNPT X 1-1/4" MNPT Thread	See page 7 for image
B4954-0023	1" FNPT X 1-1/2" MNPT Thread	
SS316 Hand Tight		
B4954-0016	1-1/4" FNPT X 1 -1/4" MNPT Thread	See page 7 for image
B4954-0025	1-1/4" FNPT X 1- 1/2" MNPT Thread	
Titanium Gr. 2 Wrench Tight		
B4954-0015	1" FNPT X 1- 1/4" MNPT Thread	See page 7 for image
B4954-0024	1" FNPT X 1 -1/2" MNPT Thread	
Titanium Gr. 2 Hand Tight		
B4954-0017	1-1/4" FNPT X 1-1/4" MNPT Thread	See page 7 for image
B4954-0026	1-1/4" FNPT X 1-1/2" MNPT Thread	
Hastelloy C Wrench Tight		
B4954-0018	1" FNPT X 1-1/2" MNPT Thread	See page 7 for image
Hastelloy C Wrench Tight		
B4954-0019	1-1/4" FNPT X 1-1/2" MNPT Thread	See page 7 for image
COLLAR STOP ADJUSTABLE FOR INSERTION REPEATABILITY		
B5106-0033	SS 1" ID X 1-3/4" OD	See page 7 for image
STAINLESS STEEL BALL VALVE ASSEMBLIES		
SS316 FOR USE WITH HAND TIGHT FITTINGS (DRAWING 2P0016)		
B5205-0003	1-1/4" Valve With Nipple 1-1/4" NPT	See page 7 for image
B5205-0004	1-1/2" Valve With Reducer 1-1/2" X 1-1/4" NPT & Nipple 1-1/2" NPT	
SS316 FOR USE WITH WRENCH TIGHT FITTINGS (DRAWING 2P0016)		
B5205-0001	1-1/4" Valve With Reducer 1-1/4" X 1" NPT & Nipple 1-1/4" NPT	See page 7 for image
B5205-0002	1-1/2" Valve With Reducer 1 1/2" X 1" NPT & Nipple 1-1/2" NPT	
KYNAR BALL VALVE ASSEMBLIES		
KYNAR FOR USE WITH HAND TIGHT FITTINGS (DRAWING 2P0017)		
B5205-0008	1-1/4" Valve With Nipple 1-1/4" NPT	See page 7 for image
B5205-0006	1-1/2" Valve With Reducer 1-1/2" X 1-1/4" NPT & Nipple 1-1/2" NPT	
KYNAR FOR USE WITH WRENCH TIGHT OR PLASTIC HAND TIGHT FITTINGS (DRAWING 2P0017)		
B5205-0007	1-1/4" Valve With Reducer 1-1/4" X 1" NPT & Nipple 1-1/4" NPT	See page 7 for image
B5205-0005	1-1/2" Valve With Reducer 1-1/2" X 1" NPT & Nipple 1-1/2" NPT	
KYNAR FOR USE WITH STOP LOCK FITTINGS (DRAWING 2P0189)		
B5205-1000	1-1/2" Valve With Nipple 1-1/2" NPT	See page 7 for image

Accessories Guide
pH/ORP/Conductivity Sensors

Model 547 / 567
Hot Tap Retractable Accessories (Compression fittings)

	METAL COMPRESSION FITTINGS - HANDTIGHT - ORING SEALS - SS316 HAND NUT 1-1/4" MNPT THREAD (DRAWING 2P0010)		
HAND TIGHT COMPRESSION FITTING OPTIONS	**SS316 WETTED COMPONENTS**		
	Part #	Description	
	B4954-0003V	VITON seals	See page 7 for image
	B4954-0003E	EPDM seals	
	B4954-0003K	KALREZ seals	
	HASTELLOY C WETTED COMPONENTS		
	B4954-0004V	VITON seals	See page 7 for image
	B4954-0004E	EPDM seals	
	B4954-0004K	KALREZ seals	
	TITANIUM GR. 2 WETTED COMPONENTS		
	B4954-0005V	VITON seals	See page 7 for image
	B4954-0005E	EPDM seals	
	B4954-0005K	KALREZ seals	
	REPLACEMENT O-RING KITS FOR HAND TIGHT COMPRESSION FITTINGS ABOVE (Set)		
	B4904K-1001	VITON	
	B4904K-1002	EPDM	
	B4904K-1000	KALREZ	
	PLASTIC COMPRESSION FITTINGS - HANDTIGHT - ORING SEALS (40 PSIG MAX) 1" MNPT THREAD (DRAWING 2P0164)		
	KYNAR WETTED COMPONENT		
	B4953-0017V	VITON seal, KYNAR Hand Nut	See page 7 for image
	B4953-0017E	EPDM seal, KYNAR Hand Nut	
	B4953-0017K	KALREZ seal, KYNAR Hand Nut	
WRENCH TIGHT COMPRESSION FITTING OPTIONS	**METAL COMPRESSION FITTINGS - WRENCH TIGHT - ORING SEALS 1" MNPT THREAD (DRAWING 2P0011)**		
	SS316 WETTED COMPONENT		
	B4954-0001V	VITON seal, SS Hex Nut	See page 7 for image
	B4954-0001E	EPDM seal, SS Hex Nut	
	B4954-0001K	KALREZ seal, SS Hex Nut	
	HASTELLOY C WETTED COMPONENT		
	B4954-0002V	VITON seal, SS Hex Nut	See page 7 for image
	B4954-0002E	EPDM seal, SS Hex Nut	
	B4954-0002K	KALREZ seal, SS Hex Nut	
	TITANIUM GR. 2 WETTED COMPONENT		
	B4954-0009V	VITON seal, SS Hex Nut	See page 7 for image
	B4954-0009E	EPDM seal, SS Hex Nut	
	B4954-0009K	KALREZ seal, SS Hex Nut	
	TFE TEFLON WETTED COMPONENT (40PSIG MAX)		
	B4953-0014V	VITON seal, TFE TEFLON Hex Nut	See page 7 for image
	B4953-0014E	EPDM seal, TFE TEFLON Hex Nut	
	B4953-0014K	KALREZ seal, TFE TEFLON Hex Nut	
	REPLACEMENT ORING FOR WRENCH TIGHT AND PLASTIC HAND TIGHT FITTINGS ABOVE		
	B4904K-1003	VITON	See page 7 for image
	B4904K-1004	EPDM	
	B4904K-1005	KALREZ	
	REPLACEMENT FERRULES FOR METALLIC HAND AND WRENCH TIGHT FITTINGS ABOVE		See page 7 for image
	B4952-0004	Teflon Front	
	B4952-0005	SS Rear Split	
STOP LOCK FITTINGS	**STOP LOCK FITTINGS - WRENCH TIGHT - ORING SEALS - 1-1/2"MNPT THREAD (DRAWING 2P0121)**		
	PEEK WETTED COMPONENT		
	B4953-0019V	VITON seals, SS Hex Nut	See page 7 for image
	B4953-0019E	EPDM seals, SS Hex Nut	
	B4953-0019K	KALREZ seals, SS Hex Nut	
	REPLACEMENT ORING KIT FOR STOP LOCK FITTINGS ABOVE (SET)		
	B4904K-1006	VITON	See page 7 for image
	B4904K-1007	EPDM	
	B4904K-1008	KALREZ	

Model 547 / 567
Hot Tap Retractable Accessories (Illustrations)

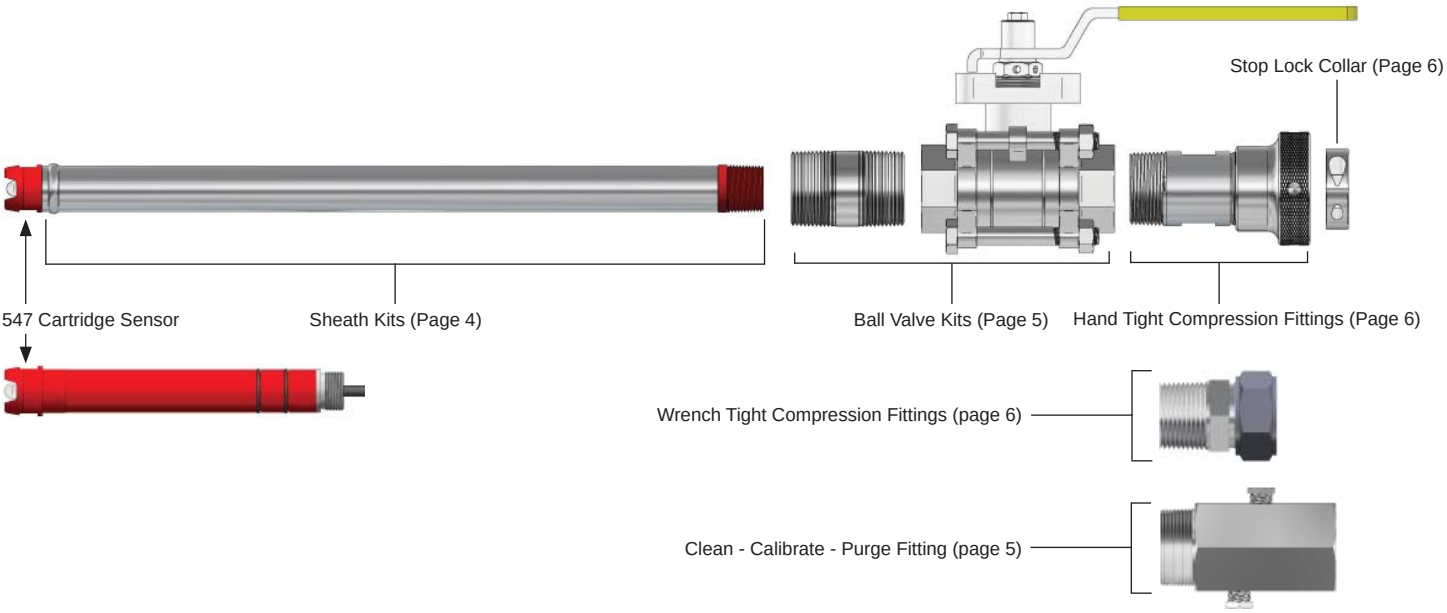

547 Metallic Hot Tap Assembly

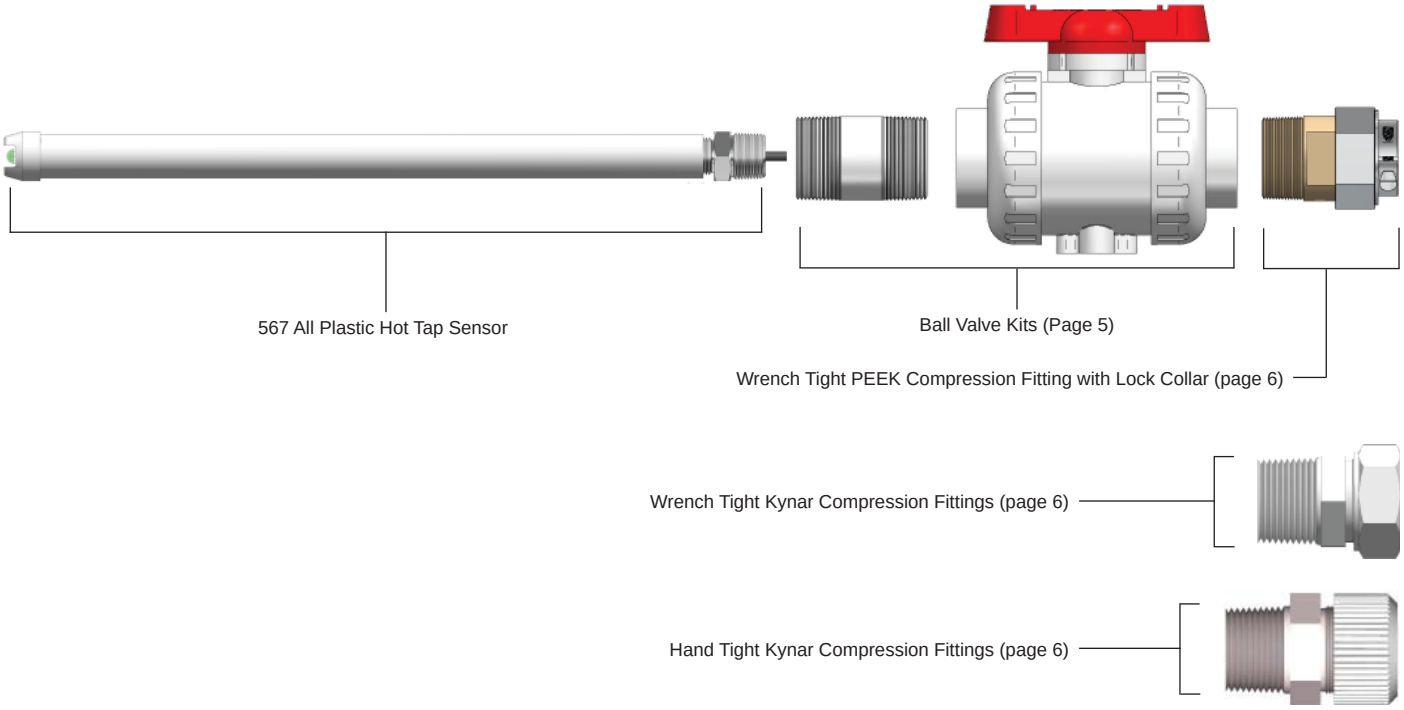

567 All Plastic Hot Tap Assembly

Accessories Guide
pH/ORP/Conductivity Sensors

Model 547
In-line High Pressure Accessories

HIGH PRESSURE (2500 PSIG) INLINE HOUSINGS 1" MNPT THREAD MOUNTING (DRAWING 2P0044) (NOSE OF SENSOR CARTRIDGE ACCOUNTS FOR THE FIRST INCH OF INSERTION)	
MATERIAL SS316	
Part #	Description
B5106-0001	1.0" Insertion Depth
B5106-0002	1.5" Insertion Depth
B5106-0003	2.0" Insertion Depth
B5106-0004	2.5" Insertion Depth
B5106-0005	3.0" Insertion Depth
B5106-0006	3.5" Insertion Depth
B5106-0007	4.0" Insertion Depth
B5106-0008	4.5" Insertion Depth
MATERIAL TITANIUM GR2	
B5106-0021	1.0" Insertion Depth
B5106-0022	1.5" Insertion Depth
B5106-0023	2.0" Insertion Depth
B5106-0024	2.5" Insertion Depth
B5106-0025	3.0" Insertion Depth
B5106-0026	3.5" Insertion Depth
B5106-0027	4.0" Insertion Depth
B5106-0028	4.5" Insertion Depth
MATERIAL HASTELLOY C-276	
B5106-0040	1.0" Insertion Depth
INLINE FLOW CELL PIPE TEE 1"FNPT THREADED 3,000PSIG RATED	
B4951-0055	SS316
B4951-0095	Titanium Gr2
FLOW CELL ASSEMBLY - SS316 SENSOR HOUSING & MATING CELL WITH 1/4" PORTS (DRAWING 2P0073) (547 PH SENSOR WITH HEMISPERICAL GLASS AND FLUSH JUNCTION REQUIRED, 547 SPECIFIC, NOT RECOMMENDED FOR 4 ELECTRODE CONDUCTIVITY)	
WALL / SURFACE MOUNTED STANDARD	
B57-S-V-N	Viton Oring
B57-S-E-N	EPDM Oring
B57-S-K-N	Kalrez Oring
PIPE MOUNTED	
B57-S-V-P	Viton Oring
B57-S-E-P	EPDM Oring
B57-S-K-P	Kalrez Oring

Model 551
Quick Change In-line Accessories

INLINE NUT-LOCK ADAPTER WITH 1" MNPT THREAD (DRAWING 2P0008)	
PLASTIC BODY 150 PSIG MAX (SENSOR DEPENDENT)	
Part #	Description
B4953-0001	CPVC Body Delrin Hand Nut
B4953-0002	KYNAR Body Delrin Hand Nut
B4953-0015	KYNAR Body SS316 Hex Nut
B4953-1010	CPVC Body KYNAR Hand Nut
B4953-1011	PEEK Body KYNAR Hand Nut
METALLIC BODY 150 PSIG MAX (SENSOR DEPENDENT)	
B4954-0006	SS316 Body Delrin Hand Nut
B4954-0008	Titanium Body Delrin Hand Nut
B4954-0007	Hastelloy C-276 Body Delrin Hand Nut
METALLIC BODY HIGH PRESSURE 300 PSIG MAX (SENSOR DEPENDENT)	
B4954-0022	SS316 Body SS316 Hex Nut
B4954-0036	Titanium Body SS316 Hex Nut
B4954-0040	Hastelloy C276 Body SS316 Hex Nut
INLINE FLOW CELL PIPE TEE 1"FNPT THREADED, FOR NUT-LOCK ADAPTERS (Drawing 2P0092)	
B4951-0036	SS316, 150 PSIG Max
B4951-0045	CPVC Schedule 80, 100 PSIG Max
B4951-0046	Kynar Schedule 80, 200 PSIG Max
B4951-0044	Polypro Schedule 80, 150 PSIG Max
FLOWCELL WITH MOUNTING CLAMP (Drawing 2P0312) 300 PSIG MAX (SENSOR DEPENDENT)	
B4992-1009	SS316 Wetted Parts, 1/2" FNPT Connections
B4992-0020	SS316 Wetted Parts, 1/4" Tubing Connections
B4992-1010	Titanium Gr. 2 Wetted Parts 1/2" FNPT Connections
B4992-1011	Titanium Gr. 2 Wetted Parts 1/4" Tubing Connections
INLINE NUTLOCK 150# SCH 80 ANSI B FLANGE ADAPTERS (Drawing 2P0083)	
CPVC FLANGE ADAPTER 150# ANSI WITH 316 SS HEX NUT 150 PSIG MAX (SENSOR DEPENDENT)	
B4951-0066	1"
B4951-0067	1-1/2"
B4951-0068	2"
KYNAR FLANGE ADAPTER 150# ANSI WITH 316 SS HEX NUT 150 PSIG MAX (SENSOR DEPENDENT)	
B4951-0118	1"
B4951-0119	1-1/2"
B4951-0120	2"
SERVICE PLUG - TO SEAL NUT-LOCK ADAPTER WHEN SENSOR IS REMOVED	
BV551PLUG	Kynar/Viton, 300PSIG Max

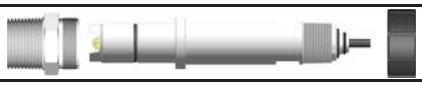

See Below for image

See Below for image

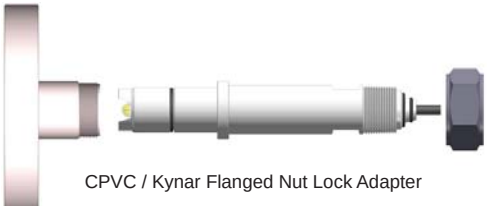

CPVC / Kynar Flanged Nut Lock Adapter

Images for reference only
Not to scale

Accessories Guide
pH/ORP/Conductivity Sensors

pH / ORP Sensor Extension Cable

pH / ORP SENSOR EXTENSION CABLES (FOR USE WITH SENSORS WITH INTEGRAL CABLE AND BNC TERMINATIONS)						
B39	Cable with Female BNC (Interfaces Male BNC Termination on Sensor Cable)					
	Cable Type					
	C-A	Coax Only 105°C **(For pH/ORP sensors w/o Temp Comp or Solution Ground)**				
	M-2	Multiconductor 130°C, Low Noise, TPE Jacket **(Rqd for Temp Comp and/or Solution Ground)**				
		Reference Conductor				
		S	Coax Shield			
		I	Independent Lead **(Multiconductor Only)**			
			Solution Ground			
			N	None		
			G	Independent Lead **(Multiconductor Only)**		
				Cable Length		
				#	**Special length cut**	
				5	5' Cable - standard	
				15	15' Cable	
				30	30' Cable	
				50	50' Cable	
				60	60' Cable	
				70	70' Cable	
				80	80' Cable	
				90	90' Cable	
				100	100' Cable	
					Lead Terminations (Transmitter End)	
					BN	BNC **(Coax Only) NO TC**
					TN	Tinned Leads **(Coax Only) NO TC**
					TT	All Tinned Leads
					PP	All Wire Ferrules
					BT	BNC & Tinned Leads for TC
Series	**Type**	**Ref**	**SG**	**Length**	**Term**	**Typical Model Number**
B39	M-2	S	N	15	TT	B39-M-2-S-N-15-TT

ADAPTIVE MINI CABLES FOR pH or ORP SENSORS WITH BNC AND OR 2 PIN MOLEX TC	
B3907-0016	Female BNC / 2 Pin Molex X Tinned Leads 12" (Drawing 2P0153)
B3907-0001	Female BNC X Tinned Leads 6" (Drawing 2P0093)
B3907-0020	Female BNC X #6 Spade Lugs 6" (Drawing 2P0151)
B3907-0015	Female 2 Pin Molex X Tinned Leads 6" (Drawing 2P0152)

pH / ORP Sensor Extension Cable (Continued)

TOP68 COUPLED 6 POLE QUICK DISCONNECT CABLES FOR pH/ORP SENSORS (FOR pH OR ORP SENSORS WITH PLUG HEAD (PH) OR PLUG TAIL (PT) TERMINATIONS)				
B68	High Temperature, Low Noise, Flexible Extension Cable with Connector and Gold Contacts			
	Cable Type			
	M	Multiconductor 80°C Max. Temperature		
		Cable Length Footage 1 – 60Ft (Whole Numbers Only) Longer POR		
		#	**Special length cut charge plus next longer selection below**	
		5	5' Cable - standard	
		15	15' Cable	
		30	30' Cable	
		50	50' Cable	
		60	60' Cable	
			Lead Terminations (Preamp / Analyzer End)	
			TT	All Tinned
			PP	All Wire Ferrules
			BT	BNC & Tinned Leads for TC
Series	**Type**	**Length**	**Term**	**Typical Model Number**
B68	M	10	BT	

STANDARD PRE-BUILT CABLES	
TOP68 COUPLED QUICK DISCONNECT FOR pH SENSORS WITH TC OR SOLUTION GND (6 POLE)	
B3907-0022	1.5M, Tinned Leads
B3907-0004	5M, Tinned Leads
B3907-0006	10M, Tinned Leads
B3907-0044	1.5M, BNC and Tinned TC Leads
B3907-0003	5M, BNC and Tinned TC Leads
B3907-0005	10M, BNC and Tinned TC Leads
TOP68 COUPLED QUICK DISCONNECT FOR pH SENSORS WITHOUT TC OR SOLUTION GROUND OR ORP SENSORS WITHOUT TC OR SOLUTION GROUND (2 POLE)	
B3907-0009	5M, Tinned Leads
B3907-0007	10M, Tinned Leads
B3907-0010	5M, BNC
B3907-0008	10M, BNC

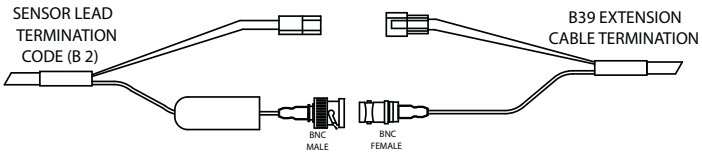

Example of B39 pH Extension cable with BNC connector.
Find extension cable on page 10

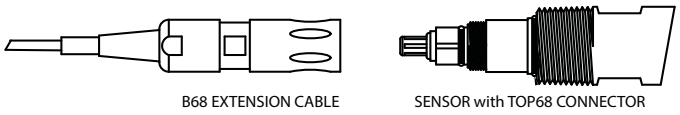

Example of TOP68 Coupled Quick Disconnect termination for a pH Sensor.
Find Extension cable above

Accessories Guide
pH/ORP/Conductivity Sensors

Common Accessories - Junction Boxes and Tags

JUNCTION BOXES FOR PH SENSORS	
Part #	Description
B5026-0001	Junction Box 4" x 4" CPVC 4 Port Included 2 SS Reinforced CPVC 3/4" FNPT Ports & 2 Slip Plugs (Drawing 2P0020) 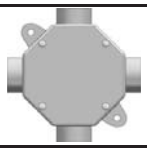
B5026-0005V	Junction Box, powder coated aluminum, weatherproof (Drawing TBA)
IDENTIFICATION TAGS	
B5003-0001 B5003-0002	Tag Polyester Tag Stainless Steel

Your Barben Analytical Representative

For product information, application assistance,
or a quote, contact Adaptive Industrial Solutions.

Sales@adaptiveind.com

www.adaptiveind.com

Barben Analytical reserves the right to make technical changes or modify the contents of this document without prior notice. We reserve all rights in this document and in the subject matter and illustrations contained within.

Hastelloy® is a registered trademark of Haynes Intl Inc.
Kalrez® and Viton are registered trademarks of DuPont Dow Elastomers L.L.C.
Kynar® is a registered trademark of Elf Atochem North America Inc.
Teflon® is a registered trademark of E.I. DuPont de Nemours Company Inc.

©