CONTRACTOR GAUGE SERIES



Model BR601D
Contractor Gauge Series

MODEL BR601D

FEATURES:

The Model BR601D from Blue Ribbon Corporation is a family of durable contractor pressure gauges, designed to meet the needs of contractors involved in HVAC, plumbing, and industrial and commercial refrigeration applications. Quality and affordabilty make this series the most attractive gauge for any project where bronze internals are suitable for use.

SPECIFICATIONS:

- Available dial size: 4.5"
- Stainless steel case
- Bronze Bourdon Tube
- Brass socket and movement
- Lead Free Brass
- Polycarbonate lens
- Zero adjust screw on dial
- 1% Accuracy Full Scale; (ASME B40.1, Grade 1A)
- Red Set Hand (Optional)

APPLICATIONS:

- HVAC
- Plumbing
- Refrigeration
- Steam heated processes*

***Note:** a pigtail siphon should always be used when putting pressure gauge into steam service

RANGE	RANGE CODES	MAJOR	MINOR
30" HG VAC	A	5" HG	2" HG
30/0/30	CC	5 PSI	1 PSI
30/0/100	CE	10 PSI	1 PSI
30/0/160	CF	25 PSI	2.5 PSI
0/15	B	2.5 PSI	0.25 PSI
0/30	C	5 PSI	1 PSI
0/60	D	10 PSI	1 PSI
0/100	E	10 PSI	1 PSI
0/160	F	20 PSI	2 PSI
0/200	G	20 PSI	2 PSI
0/300	H	50 PSI	5 PSI
0/400	I	50 PSI	5 PSI
0/500	J	50 PSI	5 PSI
0/600	K	50 PSI	5 PSI

© 2016 Blue Ribbon Corp. **Adaptive Industrial Solutions**
sales@adaptiveind.com | (877) 818-5009

DIMENSIONAL DRAWING

All dimensions are in inches (mm)

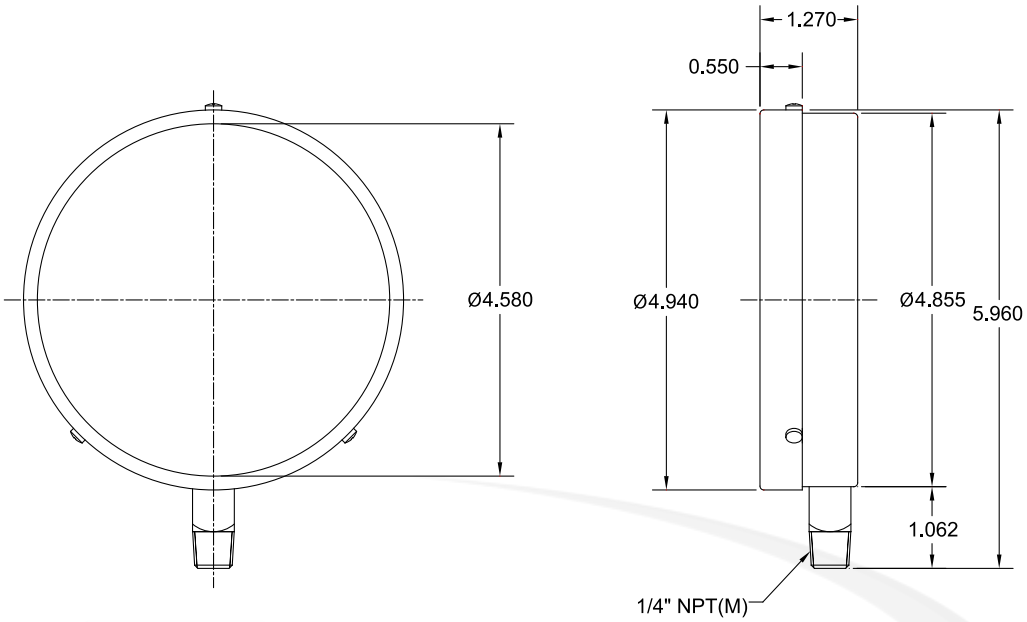

BR601D-454E
CONTRACTOR GAUGE, 4.5" 1/4" NPT, LM
0/100 PSI

ORDERING GUIDE

Example: BR601D454F

BR601	D	45	4	F
Model Number		**Dial Size**	**Connector Size**	**Pressure Range**
601 - bottom connect		4.5" - 45	4 - ¼" NPT	See chart on page 1
Fill Type				
D - dry, non-filled				

All specifications are for reference purposes only. In the interests of continuous product improvement, all specifications are subject to change without notice. Please contact Blue Ribbon Corporation for assistance with your application.

© 2016 Blue Ribbon Corp.
Adaptive Industrial Solutions
sales@adaptiveind.com | (877) 818-5009