SPECIFICATION DATA

Risk Area Heat Detector with Explosion-Proof Junction Box Model HD



DESCRIPTION

The Model HD Risk Area Heat Detector accurately senses the surrounding air temperature and actuates an electrical contact output at a pre-determined temperature. The expansion coefficients of the metal alloys used in the construction of the detector enable the hermetically sealed contact to activate at a precise point.

The Model HD Detector can be used as an alarm device to sense excessive heat or fire and warn personnel, or it can be used as a signaling device to sense fire and send a signal to an alarm panel for actuation of a fire suppression system.

The design of the heat detector utilizes Rate Compensation, which provides enhanced performance when compared to fixed-temperature or rate-of-rise detectors. Rate-of-rise devices rely on a rapid rate of increase in the ambient temperature to actuate an output and are subject to false alarms caused by warm thermal currents resulting from various industrial processes. Fixed temperature detectors must be completely heated to the alarm setpoint in order to activate and can require a longer than desired response time in the event of a rapidly growing fire. The Model HD Detector senses the surrounding air temperature and actuates its output when the temperature reaches the pre-determined level, regardless of the fire growth rate. The unique properties of the alloy outer shell allow the Model HD to respond more quickly as the fire growth rate increases; i.e. the faster the fire grows, the sooner the unit will react.

The heat detector and integral explosion-proof junction box have been properly evaluated and certified for high temperature exposure conditions. The detector's electrical contact is factory wired to a screw terminal block located within the junction box. All external wiring to the device is also connected to this screw terminal block. The junction box material type is available in aluminum or stainless steel, with two or four conduit entries, and either 3/4 inch NPT or 25 mm threads.

The Model HD is ideally suited for use in hazardous (classified) locations.

FEATURES AND BENEFITS

- Repeatable - resets itself, nothing to replace, testable
- Rugged - withstands shock and vibration
- Versatile - various temperature settings available
- Economical - wide spacings reduce installation costs
- Factory set internal contact area is hermetically sealed in stainless steel
- Ease of wiring and installation
- Aluminum or stainless steel junction box, stainless steel heat detector
- Models approved and certified to FM, CSA, ATEX, IECEx, and INMETRO Hazardous Location standards
- Models certified by Exida for SIL 2 Safety Instrumented System applications
- Models IP66/67 and NEMA Type 4x rated

SPECIFICATIONS

Terminals
UL/CSA rated for 12-26 AWG, 2.5–1.5 mm2 wire. Screw terminal required torque range is 3.5–5.3 in.-lbs. (0.4-0.6 N•m).

Electrical Rating
Open circuit monitoring:
1.0 Amp maximum @ 18-30 Vdc (resistive).
Open & short circuit monitoring:
1.0 Amp maximum @ 18-30 Vdc (resistive).

Ambient Temperature Range
Operating: –40°C to +125°C (–40°F to +257°F).
Storage: –40°C to +125°C (–40°F to +257°F).

Humidity Range
5 to 95% RH, non-condensing.

Shipping Weight
Aluminum: 4.5 lb (2.0 kg)
Stainless Steel: 9.7 lb (4.4 kg)

Thread Options
3/4 inch NPT or M25.
Two (#2, #6) or four port (#2, #3, #5, #6) models available (see diagram below).
Note: NEMA 4 / IP66 / IP67 rating requires the use of IP washers / IP glands (M25).

Dimensions

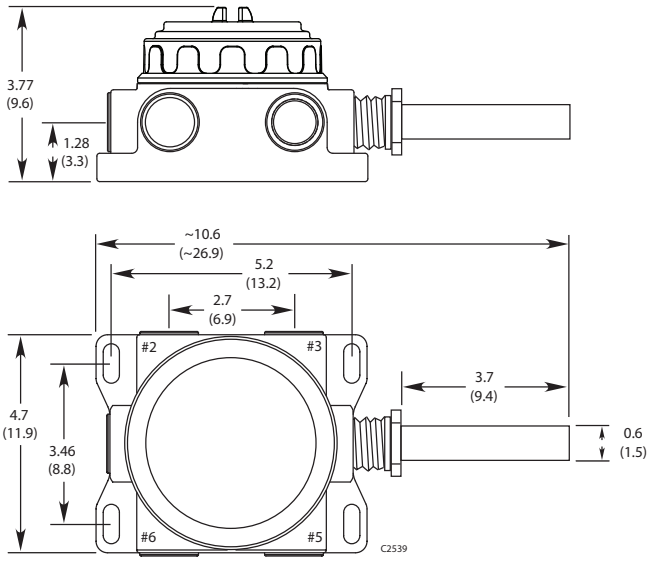

Dimensions of Heat Detector in Inches (cm)

Certification

FM/CSA:
Class I, Div. 1, Groups B, C & D (T4)
Class I, Div. 2, Groups A, B, C & D (T3A)
Class II/III, Div. 1/Div. 2, Groups E, F, & G (T4)
T_{amb} = –40°C to +125°C
Enclosure Type 4X
IP66/IP67
Conduit seal not required
For FM and CSA Zone approval information, refer to the Model HD instruction manual (95-8666).

ATEX:
CE 0539 Ex II 2 G D
FM12ATEX0032X
Ex db eb IIC T4
Ex tb IIIC T85°C
T4 (T_{amb} –40°C to +75°C)
IP66/67
––OR––
CE 0539 Ex II 2 G D
FM12ATEX0032X
Ex db IIC T4
Ex tb IIIC T135°C
T4 (T_{amb} –40°C to +125°C)
IP66/67

IECEx:
IECEx FMG 13.0009X
Ex db eb IIC T4
Ex tb IIIC T85°C
T4 (T_{amb} –40°C to +75°C)
IP66/67
––OR––
IECEx FMG 13.0009X
Ex db IIC T4
Ex tb IIIC T85°C
T4 (T_{amb} –40°C to +125°C)
IP66/67

INMETRO:
UL-BR 15.0409X
Ex tb IIIC T85°C Db
T4 (T_{amb} –40°C to +75°C)
IP66/67
––OR––
Ex tb IIIC T135°C Db
T4 (T_{amb} –40°C to +125°C)
IP66/67

Temperature Specifications and Maximum Detector Spacing Values

Setting ° F (° C)	Tolerance ° F (° C)	Spacings feet (meters)			RTI[1]	Color Coding[2]
		UL	ULc	FM		
140 (60)	+7/-8 (±4)	50 (15)	50 (15)	25 (8)	Fast	Black
160 (71)	+7/-8 (±4)	25 (8)	25 (8)	25 (8)	Fast	Black
190 (88)	+7/-8 (±4)	50 (15)	50 (15)	25 (8)	Fast	White
210 (99)	+7/-8 (±4)	25 (8)	50 (15)	30 (9)	V- Fast	White
225 (107)	+7/-8 (±4)	25 (8)	50 (15)	30 (9)	V- Fast	White
275 (135)	±10 (±6)	25 (8)	50 (15)	30 (9)	V- Fast	Blue
325 (163)	±10 (±6)	50 (15)	50 (15)	30 (9)	V- Fast	Red
360 (182)	±10 (±6)	25 (8)	50 (15)	30 (9)	V- Fast	Red
450 (232)[3]	±15 (±8)	25 (8)	50 (15)	30 (9)	V- Fast	Green
500 (260)[3]	±15 (±8)	50 (15)	50 (15)	30 (9)	V- Fast	Orange
600 (316)[3]	±20 (±11)	N/A	50 (15)	30 (9)	V- Fast	Orange
725 (385)[3]	±20 (±11)	N/A	50 (15)	30 (9)	V- Fast	Orange

1 Response Time Index - Measurement of the Heat Detector's sensitivity and speed of response. For more information, refer to standards FM 3210 and EN 54-5.
2 Color of the printing on the detector.
3 Setting available only with FM/CSA Division approvals.

Specifications subject to change without notice.

All trademarks are the property of their respective owners.
© 2020 Detector Electronics Corporation. All rights reserved.

Det-Tronics manufacturing system is certified to ISO 9001—the world's most recognized quality management standard.

Adaptive Industrial Solutions
Phone: (877) 818-5009
sales@adaptiveind.com
www.adaptiveind.com