LEAD FREE STEEL UTILITY GAUGE



lead-free

Model BRLF101D

MODEL BRLF100D

FEATURES:

- Lead Free steel utility gauge with brass socket and movement
- Dial Sizes: 1½", 2", 2½", 4", and 6"
- An inexpensive utility gauge for the broad commercial market
- Suitable for air, water, oil, gas or any other media not corrosive to brass
- Available in bottom or center connect ⅛" or ¼" (M) NPT

SPECIFICATIONS:

- Black Steel Case
- Lens Material: Glass
- Brass Socket and Movement
- Dial Sizes: 1½", 2", 2½", 4", and 6"
- Phosphor Bronze Bourdon Tube
- Dry, Non-Fillable
- Connection Sizes:
  ⅛" (M) NPT on 1½" and 2"
  ¼" (M) NPT on 2" and 2½"
- Accuracy: 3-2-3% (ASME B40.1 Grade B)
- Ambient Temperature: -50 °F to +160 °F
- Dual Scale: PSI & BAR (x100=kPa)
- IP52 Enclosure
- Overpressure: 25% FSO
- Working pressure: 75% FSO

FIELD OPTIONS:

- U-clamp Mount (UC)
- Front Flange Mount (FF)
- Back Flange Mount (BF)
- Plastic Case

RANGE	RANGE CODES	FIGURES	MINOR, INC.
30"/0 VAC	A	5" hg	0.5" hg
30"/0/15	CB	10" hg / 5 PSI	0.5" hg / 0.5 PSI
30"/0/30	CC	10" hg / 10 PSI	1" hg / 0.5 PSI
30"/0/60	CD	10" hg / 10 PSI	2" hg / 1 PSI
30"/0/100	CE	30" hg / 20 PSI	5" hg / 2 PSI
30"/0/150	CF	30" hg / 20 PSI	5" hg / 2 PSI
30"/0/300	CH	30" hg / 50 PSI	10" & 5 PSI
0/15	B	2 PSI	0.2 PSI
0/30	C	5 PSI	0.5 PSI
0/60	D	10 PSI	1 PSI
0/100	E	20 PSI	2 PSI
0/160	F	20 PSI	2 PSI
0/200	G	40 PSI	5 PSI
0/300	H	50 PSI	5 PSI
0/400	I	50 PSI	5 PSI
0/600	K	100 PSI	10 PSI
0/1000	M	200 PSI	20 PSI
0/1500	N	200 PSI	20 PSI
0/2000	O	400 PSI	50 PSI
0/3000	P	500 PSI	50 PSI
0/5000	R	1000 PSI	100 PSI
0/6000	S	1000 PSI	100 PSI
0/10000	U	2000 PSI	200 PSI

© 2023 Blue Ribbon Corp. **Adaptive Industrial Solutions**
sales@adaptiveind.com | (877) 818-5009

LEAD FREE STEEL UTILITY GAUGE

DIMENSIONAL DRAWING

All dimensions are in inches (mm)

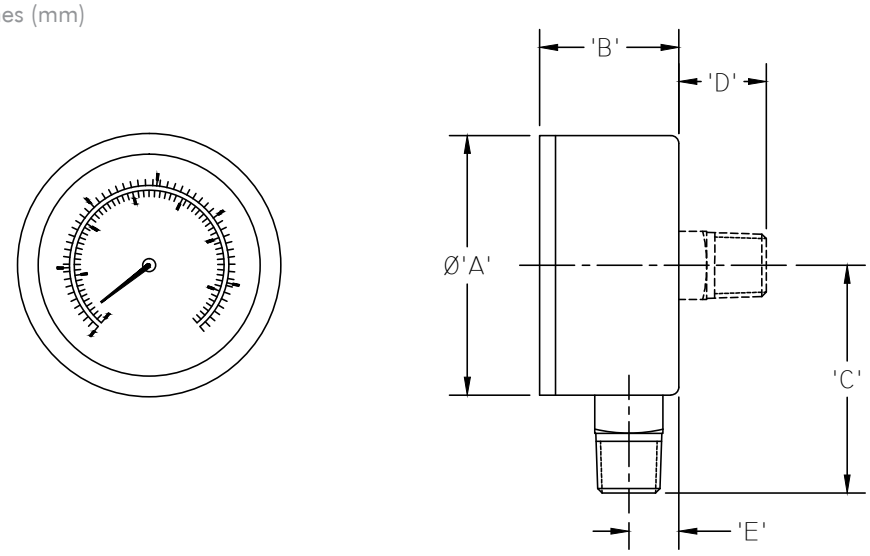

BRLF100D
DRY GAUGE

DIAL SIZE	'A'	'B'	'C'	'D'	'E'
Ø1.50 BOTTOM	1.65	0.875	1.43	0.615	0.315
Ø1.50 BACK	1.65	1.05	-	0.550	-
Ø2.00 (1/8)	2.05	1.125	1.615	0.635	0.37
Ø2.00 (1/4)	2.05	1.125	1.815	0.700	0.37
Ø2.50	2.49	1.20	1.22	0.700	0.40
Ø4.00	3.95	1.40	2.845	0.905	0.48
Ø6.00	0.8	1.87	6.3	6.2	0.87

ORDERING GUIDE

Example: BRLF102D158C

BR102	D	15	8	C
Model Number		**Dial Size**	**Connector Size**	**Pressure Range**
101 - bottom connect		1.5" - 15	8 - ⅛" NPT	See chart on page 1
102 - back connect		2.0" - 20	4 - ¼" NPT	
Fill Type		2.5" - 25		
D - dry, non-filled		4" - 40		
		6" - 60		

Available in Front Flange (FF), Back Flange (BF), and U-Clamp (UC) Mount.

All specifications are for reference purposes only. In the interests of continuous product improvement, all specifications are subject to change without notice. Please contact Blue Ribbon Corporation for assistance with your application.

© 2023 Blue Ribbon Corp. **Adaptive Industrial Solutions**
sales@adaptiveind.com | (877) 818-5009