INSTALLATION ACCESSORY / MP SENSOR PLATFORM

WET TAP & REMOVER KIT

OVERVIEW

The Wet Tap & Remover Kit is used to install Halogen's MP Sensors into an active distribution line. Conventional wet tapping equipment is used to tap the pipe and install a Corp Stop Valve. This enables both the installation and servicing of sensors located in the municipality distribution lines.

Hot-tap directly into a live main — no shutdown, no bypass plumbing, and no waste stream. Ideal for distribution mains, remote vaults, and the dead-end monitoring points where residual is hardest to hold.

145 PSI PRESSURE RATING	**4"+** PIPELINE DIAMETER
2" CORP STOP VALVE	**0** SHUTDOWNS REQUIRED



RMR-WT · WET TAP REMOVER

01
SERVICE WITHOUT SHUTDOWN

Install and remove sensors from a pressurized line. The remover retracts the sensor through a standard 2" corp stop valve — the main stays live.

02
PIPELINES 4" AND GREATER

Sized for municipal distribution mains. Uses conventional 2" wet tap drilling equipment and saddle hardware your crews already run.

03
BUILT FOR DEAD ENDS

Puts a self-cleaning, flow-independent MP sensor exactly where residual decays first — dead ends, remote vaults, and low-flow zones.

HOW IT INSTALLS

TAP
Tap the live main with a standard 2" wet tap drill and mount the saddle.

VALVE
Thread on a 2" corp stop valve — MIP or AWWA x MIP threads.

INSERT
Drive the sensor through the open valve to a 30 mm minimum insertion depth.

SERVICE
Retract with the remover any time. The valve closes behind it — zero downtime.

© 2026 Halogen Systems, Inc. All rights reserved worldwide.

DIMENSIONAL DRAWING

D-H2WT-XX-[CABLE] · FULL ASSEMBLY · WET TAP INLINE

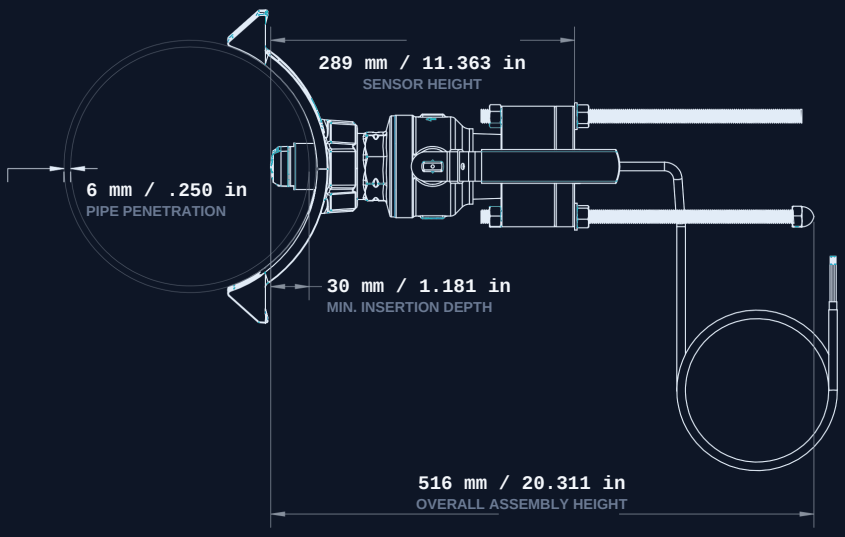

SHOWN INSTALLED

Sensor seated through a 2" corp stop valve on a tapped main. Insertion depth measured from pipe inner diameter.

EXTENDED REACH

Longer valve? Penetrating a tank or thick-walled body? Extended sensors add 4" or 6" of reach — paired with matching extended removers.

TECHNICAL SPECIFICATIONS

Pressure limit	10 bar (145 psi)
Wet tap drill equipment	2" Wet Tap Drill
Valve	2" MIP or AWWA x MIP
Weight	4 lbs
Threads	British, Metric, 2" NPT
Operating temperature	-20 to 60°C (-4 to 140°F)
Sensor load	8 W (AC) / 9 W (DC)

OPTIONS

Remover Tool (RMVRTL)
Speeds removal by simultaneously driving both remover nuts with a drill or impact driver.

NOT INCLUDED

- Wet tap valve
- Wet tap drilling kit for 2" MIP valve

> MIP threads are compatible with NPT threads. Sealing compound must be used between all thread interactions.

ORDER INFORMATION

[cable] = cable length designator · see CABL-1001

BASE CONFIGURATIONS		
MP-D-H2WT-P-[cable]	Wet Tap Sensor, Free Chlorine	MP5A free chlorine wet tap sensor — pair with RMR-WT
MP-D-H2WT-P6-[cable]	Wet Tap Sensor, Total Chlorine	MP-Total (free, mono, total) wet tap sensor — pair with RMR-WT
EXTENDED REACH — 4" AND 6" END BELLS		
MP-D-H2WT-P-L2-[cable]	Wet Tap Inline w/ 4" Extension	MP5A free chlorine, 4" end bell — must pair with RMR-WT-L2
MP-D-H2WT-P-L3-[cable]	Wet Tap Inline w/ 6" Extension	MP5A free chlorine, 6" end bell — must pair with RMR-WT-L3
D-H2WT-P6-L2	Wet Tap Total w/ 4" Extension	MP-Total drinking water, 4" end bell — must pair with RMR-WT-L2
D-H2WT-P6-L3	Wet Tap Total w/ 6" Extension	MP-Total drinking water, 6" end bell — must pair with RMR-WT-L3
REMOVERS & ACCESSORIES		
RMR-WT	Wet Tap Remover	For 2" corp stop valve — standard-length sensors
RMR-WT-L2	WT Inline Mount 4"	Kit — 4" extended threaded rods, wet tap sensor removal
RMR-WT-L3	WT Inline Mount 6"	Kit — 6" extended threaded rods, wet tap sensor removal
CORP	2" Corp Stop Valve	Muni-grade corporation stop, 2" MIP
CABL-1001	Cable Adder	5' standard — 10, 20, or custom length
RMVRTL	Remover Tool	Drives both remover nuts with a drill or impact driver

© 2026 Halogen Systems, Inc. Specifications subject to change without notice.