Taylor Valve Technology®

MALLARD CONTROL

A BRAND OF Taylor Valve Technology®

TRUSTED SINCE 1958 WORLDWIDE

Control Valves

Precise.

Quality.

Reliable.

SINCE 1958

Mallard Control Model 5100 Freezeless Control (Dump) Valve

Features

- Compact valve size
- Stainless steel trim
- Threaded process connections
- NACE MR0175 compliance option

Specifications

Process connections
1" MNPT x 1/2" FNPT
1" MNPT x 1" FNPT
2" MNPT x 1" FNPT

Body Style: "Freezeless" angle

Maximum operating pressure
2220 psig at 100 °F (38 °C)

Operating temperature range
-20 ° to 200 ° F (-29° to 93 °C)

Actuator
Air supply connection: 1/4" FNPT
Action: Reverse (fail close)
Effective area: 35 sq. in.
Maximum supply pressure
50 psig

Trim characteristic
Quick opening (on/off)

Port diameter / Flow coefficient (C_V)
0.38"/4.8 C_V 0.50"/8.3 C_V

The model 5100 "freezeless" dump valve is perfectly suited for fluid control in oil and gas separators and other process vessels.

The valve body design allows the plug and seat to remain submerged in the process media, thus giving the valve its "freezeless" characteristic.

Table of Contents

Model 5100 Freezeless Control (Dump) Valve
Features, Specifications, Part Number Codes & Dimensional Data 2-3

Model 5126 & 5127 Freezeless Control (Dump) Valves
Features, Specifications, Part Number Codes & Dimensional Data 4-5

Model 5400 Open Yoke & Model 5450 Close-Coupled Control (Dump) Valves
Features, Specifications, Part Number Codes, Dimensional Data & Engineering Data 6-9

Mallard Control Model 5100 Freezeless Control (Dump) Valve

Part Number Codes

Body Size
1 • 1" MNPT x 1" FNPT
2 • 2" MNPT x 1" FNPT
5 • 1" MNPT x 1/2" FNPT

Body Connection
S • Threaded

Trim Materials
S • Stainless Steel, .38" Orifice
T • Stainless Steel, .50" Orifice

Valve Rating
9 • 2220 psig (153 bar)

Actuator Style
R• Reverse (Fail Close)

Body Style
A • Angle

Seals/Options
B • Buna-N
V • Viton®
N • NACE/Viton®

Actuator Size
35 • 35 Sq.In. (9.5" Dia.)

5100-5 S S 9-R A B-35
Example

Materials of Construction

Description	Material
Liquid Chamber	Carbon Steel (Std.)
Cover	Carbon Steel
Body	Carbon Steel
Plug	302 Stainless Steel
Seat	304 Stainless Steel
Valve Stem	303 Stainless Steel,
Seals	Buna-N, Viton® (Optional)
Actuator Housing	Steel

Approximate Weight (lbs., kg)

Process Connection	Weight	
	(lbs.)	(kg)
1.00 MNPT x 0.50 FNPT	13.5	6.1
1.00 MNPT x 1.00 FNPT	14.5	6.6
2.00 MNPT x 1.00 FNPT	14.5	6.6

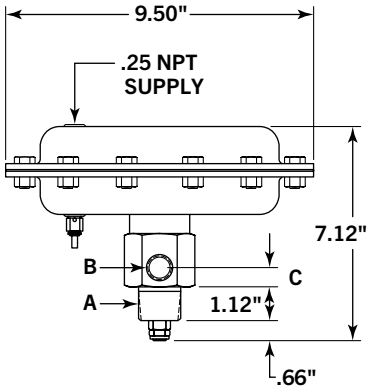

Dimensional Data (in., mm)

Body Size Code	Dimension (in.)			Dimension (mm)		
	A (MNPT)	B (FNPT)	C	A (MNPT)	B (FNPT)	C
1	1.00	1.00	0.75	25.4	25.4	19.1
2	2.00	1.00	0.75	50.8	25.4	19.1
5	1.00	0.50	0.63	25.4	12.7	16.0

Mallard Control Model 5126/5127 "Freezeless" Control (Dump) Valve

Features

- Simple maintenance: Valve trim or the complete actuator assembly can be quickly changed by simply removing the hammer nut and lifting the actuator assembly off the valve body. Disassembly of the actuator or removal of the valve from the line is not required. No special tools are required.
- Simple installation: Compact, lightweight design enables quick, easy installation with minimal labor requirements.
- Variety of valve trims: Available in stainless steel (standard) or tungsten carbide (optional) trim material, size 1/4", 3/8" or 1/2".
- Bonnet safety pressure relief: Special design of hammer nut provides warning indication if an attempt is made to remove the actuator while the valve body is still under pressure.
- Variety of actuators: The spring-opposed diaphragm actuator is available in adjustable and non-adjustable configurations for either reverse (fail close) or direct (fail open) acting applications.
- Materials of construction that comply with NACE MR0175 specifications are available upon request.

The model 5126/5127 "freezeless" dump valve is designed for fluid control in oil and gas separators and other process vessels.

The valve body design allows the plug and seat to remain submerged in the process media, thus giving the valve its "freezeless" characteristic.

Specifications

Body style: Angle
Process connections: 2" MNPT x 1" FNPT
Pressure rating: 1500 psig at 100˚F (38˚C)
Maximum differential pressure: 1500 psig
Assembled valve temperature range
-20 to 200˚F (-29˚ to 93˚C)
ANSI leakage rating: Class IV

Model 5126 Flow Coefficients (C_V)

Trim Size (in.)	Trim Characteristic	
	Quick Opening	Mod. Percent
1/4	1.4	1.3
3/8	2.0	1.9
1/2	2.3	2.2

Approx. Weight w/Actuator (lbs., kg)

Actuator Size	Weight	
	(lbs.)	(kg)
No. 35	25	11.3
No. 70	35	15.8

NOTE: *Taylor Valve reserves the right to change product designs and specifications without notice.*

Mallard Control Model 5126/5127 "Freezeless" Control (Dump) Valve

Part Number Codes

Threads
26 • Internal & External Threads **27** • External Threads

Process Connection
2 • 2" MNPT x 1" FNPT

Actuator Type
B • Direct Acting (Fail Open) Non-adjustable
C • Reverse Acting (Fail Close) Non-adjustable
D • Direct Acting (Fail Open) Adjustable (**5126 Only**)
R • Reverse Acting (Fail Close) Adjustable

Actuator Size
35 • No. 35 **70** • No. 70

Seal Material
B • Buna **V** • Viton®

Materials of Construction
– • CS, Std. Service
N • CS, NACE Option

Trim Material
1 • 17-4PH SS (**5126 Only**) **3** • 316 SS (**5127 Only**)
2 • Tungsten Carbide

Trim Size
2 • 1/4" **3** • 3/8" **4** • 1/2"

Trim Characteristic
Q • Quick Opening (On/Off)
M • Modified Percent (Throttling, **5126 Only**)

5126-2 R 35 B - 1 2 Q
Example

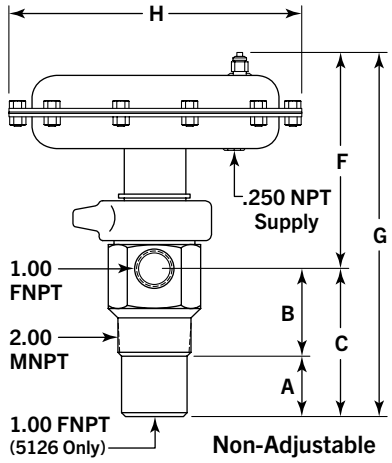

Non-Adjustable

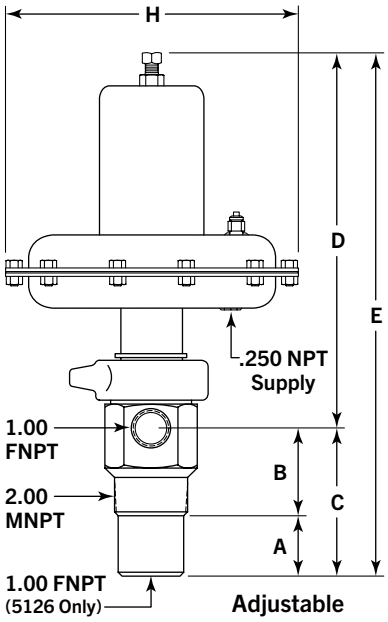

Adjustable

Materials of Construction

Description	Material
Valve Body	Carbon Steel
Bonnet	Carbon Steel
Hammer Nut	Carbon Steel
Trim	17-4PH Stainless Steel, Tungsten Carbide (Opt.)
Valve Stem	303 Stainless Steel, 316 Stainless Steel (Opt.)
Packing	PTFE V-Ring
Seals	Buna, Viton® (Opt.)
Diaphragm Housings	Steel
Diaphragm	Buna Reinforced with Nylon Fabric
Actuator Spring	Steel

Dimensional Data (in., mm)

Model	Dimension (in.)							
	A	B	C	D Max.	E Max.	F Max.	G Max.	H
5126	3.00	2.88	5.88	13.5	19.38	9.25	15.13	9.5
5127	1.75	2.88	4.62	14.0	18.62	9.25	13.87	9.5
	Dimension (mm)							
5126	76.20	731.15	149.35	342.9	492.25	234.95	384.3	241.3
5127	44.45	731.15	117.35	356.0	472.95	234.95	352.3	241.3

NOTE: *Taylor Valve reserves the right to change product designs and specifications without notice.*

Mallard Control Open Yoke & Close-Coupled Control (Dump) Valves

Features

- Simple maintenance: Valve trim or the complete actuator assembly can be quickly changed by simply removing the hammer nut and lifting the actuator assembly off the valve body. Disassembly of the actuator or removing the valve from the line is not required. No special tools are required.
- Compact, lightweight design enables quick, easy installation with minimum labor requirements.
- Bonnet safety pressure relief: Special design of hammer nut provides warning indication if an attempt is made to remove the actuator while the valve body is still under pressure.
- Hardened trim: Control valve trim is available in stainless steel (standard) or tungsten carbide (standard) to handle the most difficult applications.
- Bi-directional flow: Valve can be installed for either "flow up" or "flow down" operation, whichever best suits the application.

Models 5400 open yoke and 5450 close-coupled control (dump) valves are designed to meet the high pressure and erosive applications common to the oil and gas industry. These valves are ideally suited for pressure, level, temperature, and flow control applications on separators, scrubbers, wellheads and other oilfield equipment. The ease of maintenance, rugged steel construction, flexibility to meet a wide variety of applications, and safety features make models 5400/5450 control valves the preferred choice of production operators worldwide.

Model 5450 w/tee body

Model 5400

Shown in "straight-through" flow configuration

Specifications

Available configurations
- Open yoke (model 5400)
  - Fail-open or fail-close
- Close-coupled (model 5450)
  - Fail-open or fail-close

Flow characteristic
- Modified percent (throttling)
- Quick opening (on/off)

Body styles
- Globe (1" & 2"), angle (2" only) & tee (1" only)

End connections
- FNPT, flanged, socket weld & butt weld

Pressure ratings
- 4000 psig from -40 to 200˚F (-40 to 93˚C)
- 3540 psig at 500˚F (260˚C)

Assembled valve temperature range
- Model 5400/5450: -40 to 500˚F (-40 to 260˚C)

Available trim sizes: 1/4", 3/8", 1/2", 3/4" & 1"

Shutoff classification: ANSI class IV (Stainless steel or tungsten carbide trim)

Flow direction
- Either direction, to suit the application
- Flow up (under the seat) recommended for throttling applications

Air pressure to actuator
- 3-15 spring
  - 0 to 20 psig control signal recommended
- 6-30 spring
  - 0 to 35 psig control signal recommended

NOTE: Taylor Valve reserves the right to change product designs and specifications without notice.

Model 5400/5450 Open Yoke & Close-Coupled Control (Dump) Valves

Part Number Codes

Style
00 • Open Yoke
50 • Close-Coupled

Body Size
1 • 1"
2 • 2"

End Connections
S • Female NPT
F • RF Flange
J • RTJ Flange

ANSI Class (Pressure Rating)
1 • ANSI 150
3 • ANSI 300
6 • ANSI 600
9 • ANSI 900
5 • ANSI 1500 (FNPT Rated at 4000 psig at 200°F/93˚C)

Materials of Construction
– • Carbon Steel, Standard Service
N • Carbon Steel, NACE MR0175
L • Low-Temp

Body Style
G • Globe
T • Tee (1") or Angle (2")

Actuator Selection
33 • No. 35 Act. w/3-15 Spring
36 • No. 35 Act. w/6-30 Spring
73 • No. 70 Act. w/3-15 Spring
76 • No. 70 Act. w/6-30 Spring
BS • Bare Stem (5400 Only)

Actuator Type
R • Reverse Acting (Spring Closes / Air Opens)
D • Direct Acting (Spring Opens / Air Closes)
B • Bare Stem Option (5400 Only)

Seal Material
A • Aflas®
B • Buna-N
E • EPDM
L • Low Temp Buna-N
R • HNBR
V • Viton®
Y • Viton® GLT (Low Temp)

Trim Material
1 • 17-4PH SST
2 • Tungsten Carbide

Trim Size
2 • 1/4"
3 • 3/8"
4 • 1/2"
6 • 3/4"
8 • 1"

Trim Characteristic
M • Modified Percent (Throttling)
Q • Quick Opening (On/Off)

5450-2 S 5 - G 73 R B-1 4 Q
Example

NOTE: Taylor Valve reserves the right to change product designs and specifications without notice.

Model 5400/5450 Open Yoke & Close-Coupled Control (Dump) Valves

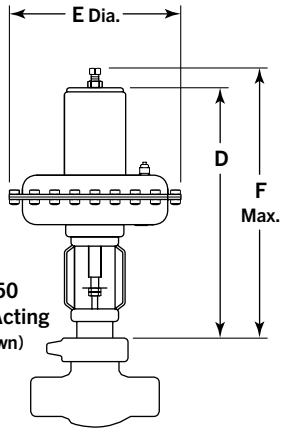

5400/5450
Reverse Acting
(5400 Shown)

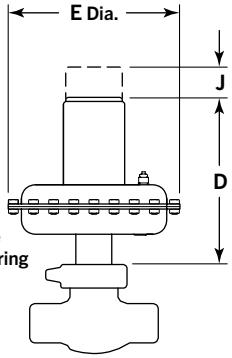

5400/5450
Direct Acting
(5450 Shown)

Note: Clearance Required for Spring Cover Removal

1" & 2" Globe Body

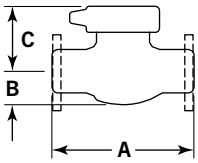

1" Tee Body

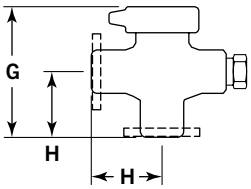

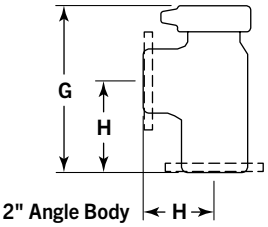

Valve & Actuator Dimensional Data (in., mm)

End Connection	Dimension (in.)									
	1" Globe Body			2" Globe Body			1" Tee Body		2" Angle Body	
	A	B	C	A	B	C	G	H	G	H
NPT	6.25	1.56	3.69	7.50	1.69	3.69	6.82	3.13	7.44	3.75
150 RF	7.25	1.56	3.69	10.00	1.69	3.69	7.32	3.63	8.69	5.00
300 RF	7.75	1.56	3.69	10.50	1.69	3.69	7.57	3.88	8.94	5.25
600 RF	8.25	1.56	3.69	11.25	1.69	3.69	7.82	4.13	9.31	5.63
600 RTJ	8.25	1.56	3.69	11.38	1.69	3.69	7.82	4.13	9.38	5.69
900/1500 RF	9.38	1.56	3.69	12.88	1.69	3.69	8.38	4.69	10.13	6.44
900/1500 RTJ	9.38	1.56	3.69	13.00	1.69	3.69	8.38	4.69	10.19	6.50
	Dimension (mm)									
NPT	158.8	39.6	93.7	190.5	42.9	93.7	173.2	79.5	189.0	95.3
150 RF	184.2	39.6	93.7	254.0	42.9	93.7	185.9	92.2	220.7	127.0
300 RF	196.9	39.6	93.7	266.7	42.9	93.7	192.3	98.6	227.1	133.4
600 RF	209.6	39.6	93.7	285.8	42.9	93.7	198.6	104.9	236.5	143.0
600 RTJ	209.6	39.6	93.7	289.1	42.9	93.7	198.6	104.9	238.3	144.5
900/1500 RF	238.3	39.6	93.7	327.2	42.9	93.7	212.9	119.1	257.3	163.6
900/1500 RTJ	238.3	39.6	93.7	330.2	42.9	93.7	212.9	119.1	258.8	165.1

Diaphragm Effective Area & Housing Max. Pressure

Actuator Size	Diaphragm Effective Area	Housing Max. Pressure
No. 35	35 in.^{2}	50 psig
No. 70	70 in.^{2}	35 psig

Actuator Size	Dimension (in.)											
	5400 Direct			5400 Reverse			5450 Direct			5450 Reverse		
	D	E	J[1]	D	E	F	D	E	J[1]	D	E	F
No. 35	17.06	9.50	5.50	14.31	9.50	16.31	11.44	9.50	5.50	8.69	9.50	10.69
No. 70	18.56	12.50	7.00	15.44	12.50	17.44	12.94	12.50	7.00	9.81	12.50	11.81
	Dimension (mm)											
No. 35	433.3	241.3	139.7	363.5	241.3	414.3	290.6	241.3	139.7	220.7	241.3	271.5
No. 70	471.4	317.5	177.8	392.2	317.5	443.0	328.7	317.5	177.8	249.2	317.5	300.0

[1]Clearance required for spring removal.

Approximate Weights (lbs., kg)

End Connection	Model 5400 / Weights (lbs., kg)															
	No. 35 Actuator								No. 70 Actuator							
	1" Globe		1" Tee		2" Globe		2" Angle		1" Globe		1" Tee		2" Globe		2" Angle	
	lbs.	kg	lbs.	kg	lbs.	kg	lbs.	kg	lbs.	kg	lbs.	kg	lbs.	kg	lbs.	kg
NPT	29	13.2	32	14.5	36	16.3	36	16.3	44	20.0	47	21.3	51	23.1	51	23.1
ANSI 150	34	15.4	38	17.2	46	20.9	46	20.9	49	22.2	53	24.0	61	27.7	61	27.7
ANSI 300	37	16.8	41	18.6	50	22.7	50	22.7	52	23.6	56	25.4	65	29.5	65	29.5
ANSI 600	39	17.7	43	19.5	52	23.6	52	23.6	54	24.5	58	26.3	67	30.4	67	30.4
ANSI 900/1500	46	20.9	51	23.1	80	36.3	80	36.3	61	27.7	66	29.9	95	43.1	95	43.1
	Model 5450 / Weights (lbs., kg)															
NPT	25	11.3	28	12.7	32	14.5	32	14.5	40	18.1	43	19.6	47	21.3	47	21.3
ANSI 150	30	13.6	34	15.4	42	19.1	42	19.1	45	20.4	49	22.2	57	25.9	57	25.9
ANSI 300	33	15.0	37	16.8	46	20.9	46	20.9	48	21.8	52	23.6	61	27.7	61	27.7
ANSI 600	35	15.9	39	17.7	48	21.8	48	21.8	50	22.7	54	24.5	63	28.6	63	28.6
ANSI 900/1500	42	19.1	47	21.3	76	34.5	76	34.5	57	25.9	62	28.1	91	41.3	91	41.3

NOTE: Taylor Valve reserves the right to change product designs and specifications without notice.

Model 5400/5450 Open Yoke & Close-Coupled Control (Dump) Valves

Actuator Maximum Allowable Shutoff Pressure Drops, Reverse Acting (Fail Close)

Trim Size (in.)	Flow Direction	Signal to No. 35 Actuator				Signal to No. 70 Actuator			
		3-15 Spring		6-30 Spring		3-15 Spring		6-30 Spring	
		3-15 psig	0-20 psig	6-30 psig	0-35 psig	3-15 psig	0-20 psig	6-30 psig	0-35 psig
.25	Up	3800	4000	4000	4000	4000	4000	4000	4000
.38		2050	3280	3410	4000	3210	4000	4000	4000
.50		1100	1680	1830	2300	1650	3190	4000	4000
.75		320	560	690	950	530	940	2020	2800
1		110	220	320	490	230	420	960	1460
.25	Down	4000	4000	4000	4000	4000	4000	4000	4000
.38		4000	4000	4000	4000	4000	4000	4000	4000
.50		3350	4000	4000	4000	4000	4000	4000	4000
.75		1580	2300	2530	3270	2080	2800	3780	4000
1		770	1100	1240	1680	970	1460	2510	2950

Actuator Maximum Allowable Shutoff Pressure Drops, Direct Acting (Fail Open)

Trim Size (in.)	Flow Direction	Signal to No. 35 Act[1]		Signal to No. 70 Act[1]	
		3-15 Spring	6-30 Spring	3-15 Spring	6-30 Spring
.25	Up	4000	4000	4000	4000
.38		2700	4000	4000	4000
.50		1370	2880	2540	4000
.75		410	1080	730	2020
1		140	520	230	960

Trim Size (in.)	Flow Direction	Signal to No. 35 Act[1]		Signal to No. 70 Act[1]	
		3-15 Spring	6-30 Spring	3-15 Spring	6-30 Spring
.25	Down	4000	4000	4000	4000
.38		4000	4000	4000	4000
.50		3800	4000	4000	4000
.75		1750	1940	4000	4000
1		860	940	1840	2790

[1]Actual signal pressure to actuator includes an additional 5 psig (0.3 bar) of supply pressure to the controller.

Thrust Force

Trim Size Inches	PSI			
	500	1000	1500	2000
.25	25 lbf	50 lbf	75 lbf	100 lbf
.38	58 lbf	115 lbf	173 lbf	230 lbf
.5	100 lbf	200 lbf	300 lbf	400 lbf
.75	225 lbf	450 lbf	673 lbf	900 lbf
1	400 lbf	800 lbf	1200 lbf	1600 lbf

NOTE: (lbf = Pound Force)

Flow Coefficients (C_V), Modified Percent & Quick Opening

Body Size (in.)	Orifice Size (in.)	Body Style / Valve Opening (% Travel)												
		Modified Percent											Quick Opening	
		Globe										Angle	Globe	Angle
		10	20	30	40	50	60	70	80	90	100	100	100	100
1	0.25	.284	.506	.657	.767	.875	.989	1.10	1.20	1.32	1.40	1.64	1.68	1.92
	0.38	.311	.621	.942	1.28	1.64	2.07	2.51	2.93	3.35	3.70	4.23	3.82	4.34
	0.50	.502	1.05	1.59	2.09	2.61	3.14	3.72	4.27	4.96	5.62	6.61	5.70	6.72
	0.75	.882	1.76	2.76	3.82	4.93	6.17	7.49	8.85	10.0	11.0	15.1	11.6	15.2
	1.00	1.01	2.02	3.44	5.07	6.78	8.42	10.3	12.4	14.3	15.4	20.8	15.5	20.9
2	0.25	.284	.506	.657	.767	.875	.989	1.10	1.20	1.32	1.40	1.66	1.68	1.98
	0.38	.311	.621	.942	1.28	1.64	2.07	2.51	2.93	3.35	3.70	4.35	3.82	4.47
	0.50	.592	1.17	1.76	2.34	2.95	3.70	4.57	5.50	5.95	6.08	6.90	6.19	7.00
	0.75	.882	1.81	2.98	4.11	5.74	7.03	8.49	10.1	11.5	12.9	15.2	13.0	15.8
	1.00	1.08	2.12	3.58	5.43	7.46	9.27	11.4	13.7	15.8	17.1	21.1	18.0	22.0

Bonnet Safety Pressure Relief

The valve on the left shows the hammer nut in the "locked" position during normal operation. The valve on the right illustrates "Bonnet Safety Pressure Relief". The O-Ring clears the packing plug while the hammer nut is still engaged (threaded) onto the valve body. At this point, if the valve assembly is under pressure, process fluid will escape through the weep hole to indicate a warning to the service person that the valve is still under pressure, thereby prompting release of line pressure before proceeding, thus preventing the actuator assembly from blowing out.

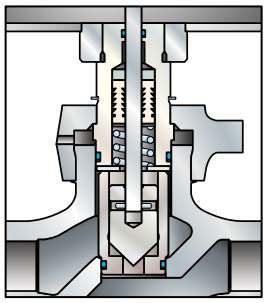

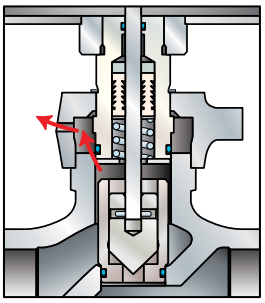

NOTE: Taylor Valve reserves the right to change product designs and specifications without notice.

Taylor Valve Technology
Adaptive Industrial Solutions
sales@adaptiveind.com
(877) 818-5009

EMPLOYEE OWNED
Since 2020

Precise.

Quality.

Reliable.

07/30/25