

10 SERIES

- 1-1/2" and 2" clamp, fillable dry or liquid-filled gauge
- Ranges from -30 inHg to 0 psig through 0 psig to 600 psig
- 2-1/2" and 4" gauge sizes
- Electropolished Stainless Steel case
- 316 Stainless Steel wetted parts
- Meets the requirements of 3-A
- C.I.P, S.I.P and Autoclave (only dry gauges are recommended for Autoclave)

APPLICATIONS

- Food & beverage processing
- Pasteurization systems
- Pharmaceutical
- Medical

SPECIFICATIONS

Pressure ranges	-30 inHg to 0 psig through 0 to 600 psig
Accuracy	2-1/2″ gauge ±1.6% full scale 4″ gauge ±1.0% full scale
Temperature ranges	Media -40 °F to 300 °F (-40 °C to 150 °C) Ambient 25 °F to 140 °F (-4 °C to 60 °C) Storage 25 °F to 140 °F (-4 °C to 60 °C)
Measuring element	316 Stainless Steel "C" tube
Connection	1-1/2″ or 2″ ASME-BPE Sanitary Clamp, 316L Stainless Steel Diaphragm 316L Stainless Steel, electropolished to 32 µin Ra or better
Case	Electropolished 304 Stainless Steel
Bayonet ring	Electropolished 304 Stainless Steel
Lens	Safety glass
Pointer	Balanced Aluminum, black finish
Dial	Aluminum, white background, black print
Movement	Stainless Steel
Fill liquid	Glycerin, USP Grade

***Note:** Autoclave requires the addition of optional laminated safety glass lens

Diaphragm seal must be installed facing downward or in a vertical position for drainability.
Do not install diaphragm seal facing in an upward position.

⚠ **WARNING:** This product can expose you to chemicals including Lead and Nickel, which are known to the State of California to cause cancer and birth defects or other reproductive harm. For more information go to www.P65Warnings.ca.gov

ORDERING INFORMATION							
SERIES	**100**	10 Series heavy-duty, bottom connected			**101**	10 Series heavy-duty, back connected	
CLAMP SIZES	**12**	1-1/2"	**16**	2"			
FILL LIQUID	**1**	Glycerin	**Other food grade quality fill fluids available – please consult factory**				
GAUGE SIZES	**25**	2-1/2"	**40**	4"			
PRESSURE RANGES	**01**	-30 inHg to 0 psig *	**16**	-30 inHg to 160 psig	**46**	0 psig to 60 psig	**64** 0 psig to 400 psig
	04	-30 inHg to 15 psig	**19**	-30 inHg to 200 psig	**49**	0 psig to 100 psig	**70** 0 psig to 600 psig
	07	-30 inHg to 30 psig	**22**	-30 inHg to 300 psig	**55**	0 psig to 160 psig	
	10	-30 inHg to 60 psig	**40**	0 psig to 15 psig *	**58**	0 psig to 200 psig	
	13	-30 inHg to 100 psig	**43**	0 psig to 30 psig	**61**	0 psig to 300 psig	
GAUGE FILLS	**0**	None	**1**	Glycerin	**2**	Silicone	**3** Mineral oil
		(All food grade quality fill fluids)					
GAUGE OPTIONS	**0**	None	**1**	Max. Indicating Pointer**	**2**	Adjustable Pointer **	

Please consult your local NOSHOK Distributor or NOSHOK, Inc. for availability and delivery information.

* Not available on 4" gauge and 1-1/2" ASME-BPE Sanitary Clamp
** Not available on 2-1/2" gauge

EXAMPLE

100 – 12 – 1 – 25 – 55 – 1

Series ..... 10 Series heavy-duty
Clamp size ..... 1-1/2" ASME-BPE Sanitary
Fill liquid ..... Glycerin (USP food grade)
Gauge size ..... 2-1/2"
Pressure range ..... 0 psig to 160 psig
Gauge fill ..... Glycerin

4" Gauge with 2" ASME-BPE Sanitary Clamp Connection

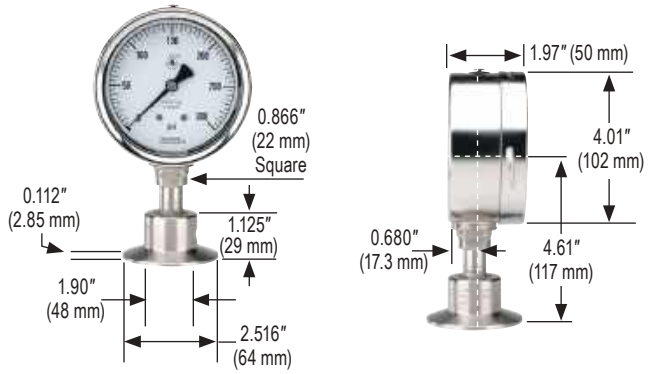

4" Gauge with 1-1/2" ASME-BPE Sanitary Clamp Connection

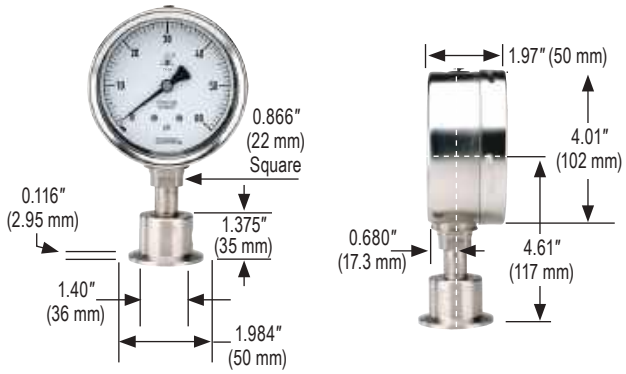

2-1/2" Gauge with 2" ASME-BPE Sanitary Clamp Connection

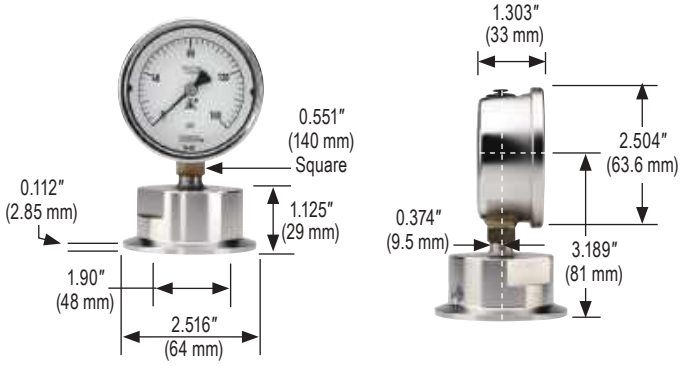

2-1/2" Gauge with 1-1/2" ASME-BPE Sanitary Clamp Connection

