SOLAR DIGITAL THERMOMETER



Model BR9A35-SD

MODEL BR9A-SD

FEATURES:

- Solar Powered reading in digital format (°F & °C)
- High Impact ABS Case
- Vari-Angle Connection
- Made to switch to both temperature scales (°F & °C)
- ±1.0% Accuracy
- Optional plastic face
- 16 Lux Rating

APPLICATIONS:

- Heating
- Ventilation
- Air Conditioning

SPECIFICATIONS:

- Display: 2.34″ x 4.35″ sensing display/readout
- Case: High Impact ABS
- Lux Rating: 16 Lux
- Stem Length: 3.5″ or 6″
- Thermowell: ¾″ NPT brass thermowell (Standard)
- Temperature Range: -40 to 320 °F (-40 to 160 °C)
- Accuracy: ±1%
- Process Temperature: -50 to 320 °F (-45.5 to 160 °C)
- Adjustment: Fully adjustable
- Enclosure Rating: IP54

© 2021 Blue Ribbon Corp. **Adaptive Industrial Solutions**
sales@adaptiveind.com | (877) 818-5009

SOLAR DIGITAL THERMOMETER

DIMENSIONAL DRAWING

All dimensions are in inches (mm)

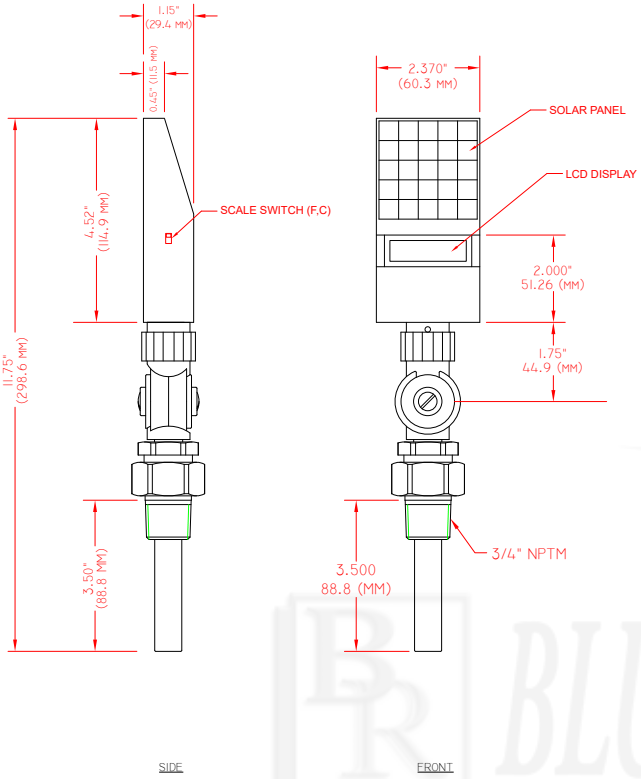

BR9A-SD
9" SOLAR DIGITAL THERMOMETER
-40 to 320 F/C
3.5" STEM, 3/4" NPTM

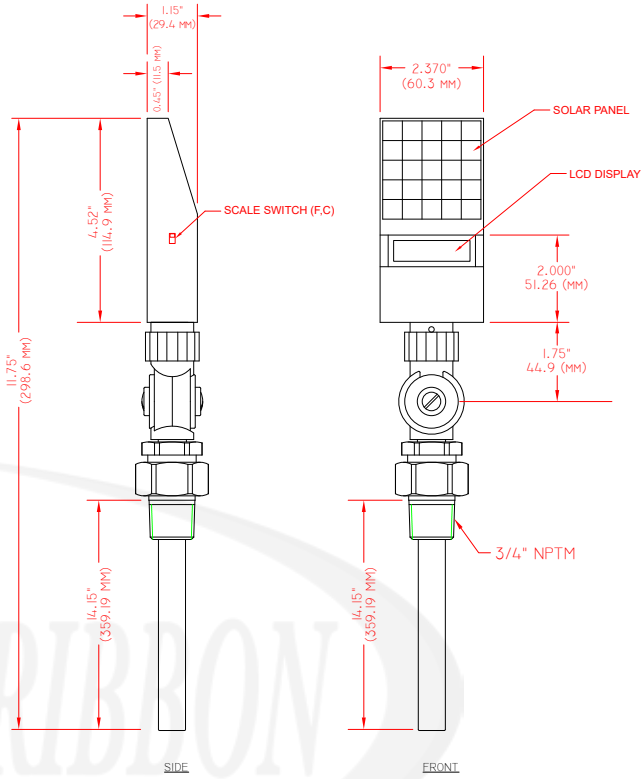

BR9A-SD
9" SOLAR DIGITAL THERMOMETER
-40 to 320 F/C
6" STEM, 3/4" NPTM

ORDERING GUIDE

Example: BR9A-SD

MODEL	STEM LENGTH	TEMP RANGE
BR9A-SD	35 = 3.5″	-40-320 °F / -40-160 °C
	6 = 6″	

All specifications are for reference purposes only. In the interests of continuous product improvement, all specifications are subject to change without notice. Please contact Blue Ribbon Corporation for assistance with your application.

© 2021 Blue Ribbon Corp.
Adaptive Industrial Solutions
sales@adaptiveind.com | (877) 818-5009