Valve Product Solutions

NOSHOK







Needle Valves

Manifold Valves

- 2-Valve Static Pressure & Liquid Level
- 3-Valve Differential Pressure
- 5-Valve Natural Gas

Accessories







At NOSHOK, we pride ourselves on being innovators in the industry by continually offering the latest technology and measurement solutions, and providing the best customer support in the marketplace.

Established in 1967, NOSHOK was one of the first companies to offer liquid filled pressure gauges. We also took a bold step by backing our quality gauges with an extended 3-year warranty. That unwavering standard of quality has endured for 50+ years, and as we have expanded our product offering we continue to provide industry-leading warranties. NOSHOK also leads the industry as one of the first companies to offer corrosion-resistant zinc nickel plating standard on our carbon steel valves.

We have the capacity to put together special requirements which are so often hard to find. If you do not find what you need in this catalog, chances are we can still put a solution together.

NOSHOK is committed to providing excellence on every level. Thank you for choosing NOSHOK products.

Christian F. L. Cole
CEO/President

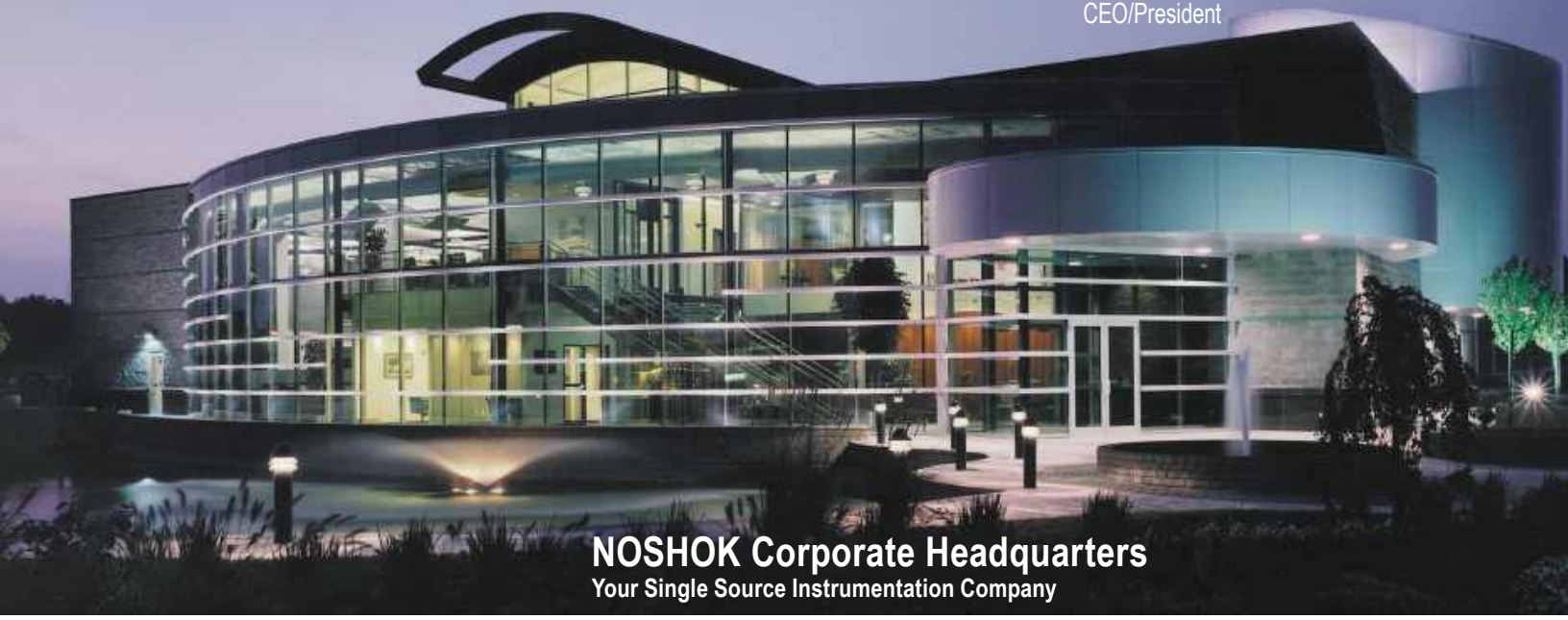

NOSHOK Corporate Headquarters
Your Single Source Instrumentation Company

NOSHOK is a member and actively supports:

ASME SETTING THE STANDARD
fisa Distributors Serving Sanitary Processing
FPDA motion control solutions network
ASSOCIATION FOR HIGH TECHNOLOGY INSTRUMENTATION AHTD
American Water Works Association
NATIONAL FLUID POWER ASSOCIATION NFPA

NOSHOK is an ISO 9001:2015 registered company.

WARRANTY INFORMATION

NOSHOK's **Three Year Warranty** applies to all needle and manifold valves. ***NOSHOK guarantees all products*** to be free from defects in material and workmanship, to remain within catalogued accuracy specifications, and to operate within the catalogued performance specifications. These products must be operated within the catalogued environmental and application parameters. Determination of failure will be made by NOSHOK, Inc.'s equipment and personnel or a certified test facility specializing in this type of evaluation.

THE NOSHOK ADVANTAGE

NOSHOK VALVES PATENTED FOR SUPERIOR DESIGN

NOSHOK has been awarded a patent for our innovative valve design, which features a unique body-to-bonnet, metal-to-metal seal that significantly increases the pressure range of the valve without compromising the flow coefficient. This design also helps maintain the integrity of the bonnet threads by segregating them from the process media. (Patent No. US 7,758,014)

The body seal incorporates a dovetail undercut below the seal that improves the metal-to-metal contact forces as pressures increase, as well as a dual outlet orifice to maximize fluid flow. These novel design features increase the pressure limits of the valve to 10,000 psi, which is significantly higher than similar sized miniature needle valves.

NOSHOK valves are built for maximum durability and performance in the toughest applications. They are also available with Zinc-Nickel plating, which provides one of the highest levels of corrosion resistance available on the market today. All NOSHOK valves are 100% helium leak tested to 1 x 10^{-4} ml/s for guaranteed performance and reliability.

NOSHOK valves that incorporate this patented design include our 100 Series hard seat mini valves, 800/850 Series bleed valves, all 2-valve block and bleed valves along with 5-valve manifolds. Watch the video on this patented valve design by scanning the QR code below.

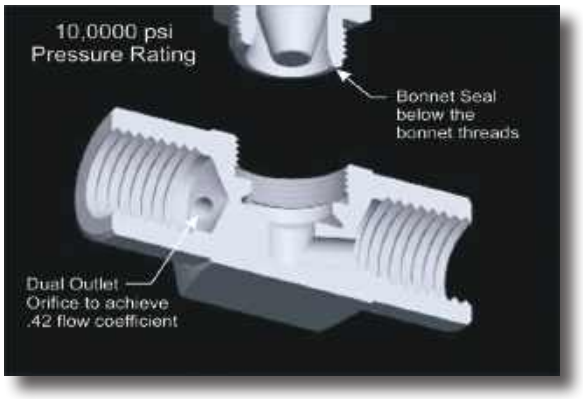

SUPERIOR CORROSION-RESISTANT ZINC-NICKEL PLATING ON ALL CARBON STEEL NOSHOK VALVES

A significant number of high profile international aerospace and automotive companies have made the switch to Zinc-Nickel plating for their components over the last decade, so we decided to put this plating to the test for ourselves.

In a certified test by an independent lab, two samples were subjected to 1,000+ hours of exposure to a 5% salt spray (fog) environment in a test chamber operated and maintained in accordance with ASTM B-117-07a. **The Zinc-Nickel plated sample showed no visible corrosion on the part after 1,000+ hours of exposure.** Internal tests yielded the same results after being submerged for 3,500 hours in a 10% salt solution. The Zinc-Nickel plated valves far outperformed the electroless Nickel and cobalt plated valves in terms of corrosion resistance. Because of these impressive results, all Carbon Steel NOSHOK needle and manifold valves now utilize this material as standard plating to withstand and endure in the harshest environments.

Improvements in corrosion protection have become increasingly important for outdoor applications, where traditional platings have limited performance capabilities. In addition to its excellent corrosion resistance (higher than any other sacrificial alloy), Zinc-Nickel plating provides increased deposit hardness which results in extended wear resistance and longer service life – an ideal quality for most industrial applications. It is also RoHS compliant.

Note: Colors may vary due to normal process variation and will not affect the performance of the valve.



RoHS compliant

NOSHOK

TABLE OF CONTENTS

WARRANTY INFORMATION & THE NOSHOK ADVANTAGE

Needle/Manifold Valve Warranties; Patented Design; ZnNi Plating 3

NEEDLE VALVES

Mini, Hard Seat:
100 SERIES 6-13

Mini, Soft Tip:
150 SERIES 14-21

Multiport, Hard Seat:
200 SERIES 22-25

Multiport, Soft Seat:
300 SERIES 26-29

Standard, Hard Seat:
400 SERIES 30-35

Standard, Soft Seat:
500 SERIES 36-39

Block & Bleed, Hard Seat:
600 SERIES 40-43

Block & Bleed, Soft Seat:
700 SERIES 44-47

Bleed, Hard Seat & Soft Tip:
800/850 SERIES 48-51

2-Valve Block & Bleed, Hard Seat:
2070 SERIES 52-55

2-Valve Block & Bleed, Soft Seat/Tip:
2170 SERIES 56-59

3-Valve Double Block & Bleed, Hard Seat:
3070 SERIES 60-63

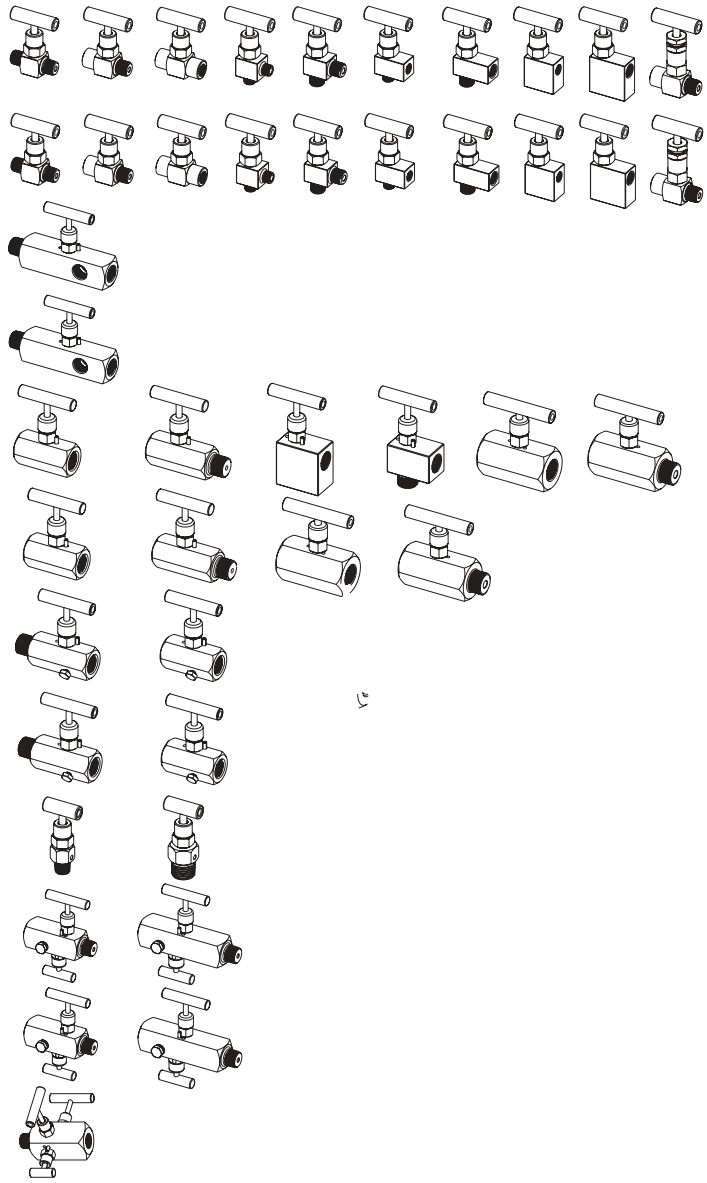

NEEDLE VALVE OPTIONS

Handles, Panel Mounts, Plug, Bleed Plug, Bleed Screw, Packing, Stem Tips 64-67

MANIFOLD VALVES, 2-VALVE

Static Pressure Block & Bleed, Hard & Soft Seat:
2000/2100 SERIES 68-73

Liquid Level, Hard & Soft Seat:
2020/2120 SERIES 74-77

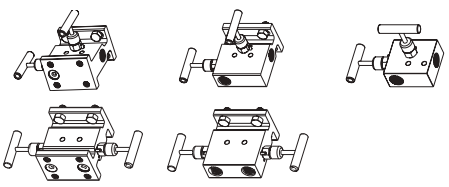

TABLE OF CONTENTS

NOSHOK

MANIFOLD VALVES, 2-VALVE

Static Pressure Narrow Block & Bleed, Hard & Soft Seat:
200002/210002 SERIES & 200402/210402 SERIES 78-81

Natural Gas Large Bore 90° Angle (0.375" Orifice):
2530 SERIES 82-85

Static Pressure Mini Block & Bleed, Hard Seat & Soft Tip (0.141" Orifice):
2602/2702 SERIES 86-89

Static Pressure Block & Bleed, Hard Seat & Soft Tip (0.156" Orifice):
2603/2703 SERIES & 2604/2704 SERIES 90-93

Chart Recorder Manifold, Soft Seat:
2180/3180/5180 SERIES 94-97

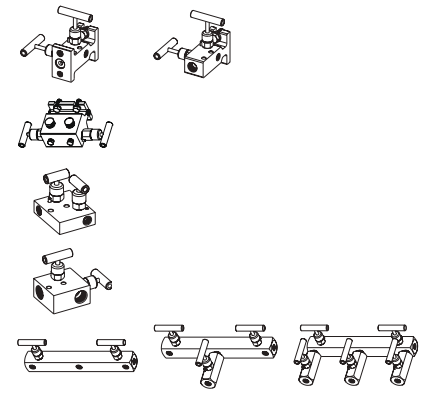

MANIFOLD VALVES, 3-VALVE

Differential Pressure, Hard & Soft Seat:
3010/3110 SERIES 98-103

Differential Pressure Compact , Hard Seat:
3040 SERIES 104-107

Differential Pressure, Soft Seat (0.375" Orifice):
3510 SERIES 108-113

Differential Pressure Mini, Hard Seat & Soft Tip (0.141" Orifice):
3610/3710 SERIES 114-117

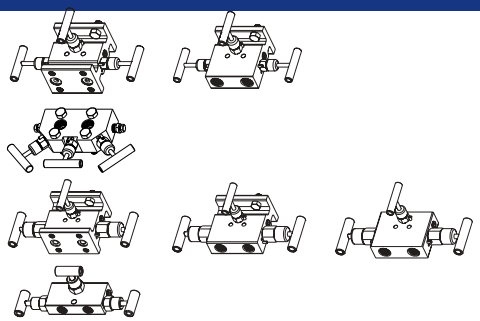

MANIFOLD VALVES, 5-VALVE

Natural Gas, Hard & Soft Seat/Tip:
5030/5130 SERIES 118-127

Natural Gas & Power Pattern Compact:
5040/5090 SERIES 128-133

Natural Gas, Soft Seat/Tip (0.375" Orifice):
5530 SERIES 134-145

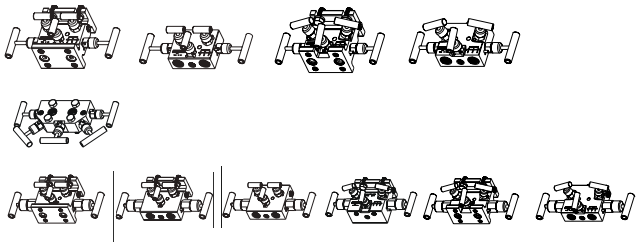

CONNECTORS

Stabilized & Non-Stabilized Connectors 146-147
Stabilized Connectors with Integral Valve 148-151

MANIFOLD VALVE ACCESSORIES

Futbols, Static Adaptors, Dielectric Kits, Manifold Mounting Kits,
Δ Pressure to Static Adaptor, Δ to Δ Pressure Adaptor,
Vertical to Horizontal Adaptor 152-157

MOUNTING DIAGRAMS FOR MANIFOLD VALVES

2000, 3000, & 5000 SERIES 158-159
Needle & Manifold Valve Reference Information 160-165
Canadian Registration Numbers 166

In keeping with and for purpose of product and/or manufacturing process improvements, NOSHOK, Inc. reserves the right to make design changes without prior notice.

Adaptive Industrial Solutions | sales@adaptiveind.com | (877) 818-5009

100 SERIES



- Compact size valve built for maximum durability and robust performance in the toughest applications
- 100% helium leak tested to 1 x 10^{-4} ml/s for performance and reliability
- Available in Zinc-Nickel plated Steel, electropolished Stainless Steel, and Brass
- FKM o-ring seal and PTFE back-up ring below the stem threads to protect from corrosion and galling; PTFE or Graphite packing optional
- All stem threads are rolled for strength and ease of operation
- Patented body-to-bonnet, metal-to-metal seal is designed to significantly increase the pressure range of the valve **(U.S. Patent 7,758,014)**

SPECIFICATIONS	
Materials	Zinc-Nickel plated Steel, electropolished 316 Stainless Steel*, 360 Brass
Connections	1/8" NPT, 1/4" NPT, 7/16"-20 UNF-2B, 9/16"-18 UNF-2B Male-male, Male-female, Female-female, in-line and angled configurations
Pressure ratings** †	Brass: 6,000 psi @ 200 °F Steel: 10,000 psi @ 200 °F Stainless Steel: 10,000 psi @ 200 °F
Orifice size	0.172"
Flow coefficient	C_V 0.42
Stem seal & type	All 316 Stainless Steel stems with FKM o-ring and PTFE back-up ring below the threads, PTFE or Graphite packing optional
Options	Panel mountings, o-ring materials, handles, packings, regulating stem and stem tips
Weight	Approximately 0.5 lb.

* All 316SS products meet the requirements of NACE MR0175/ISO 15156-3.
** If a packing option is chosen, maximum pressure rating is 6,000 psi. Refer to the "Pressure vs. Temperature: Packing Style with Compatible Fluid" chart at the back of this catalog.
† These pressure ratings apply to all 100 series Mini Valves except the following which have pressure ratings as shown:
Stainless Steel 7/16"- 20 UNF-2B connection: 9,000 psi @ 200 °F
Steel 7/16"- 20 UNF-2B connection: 8,000 psi @ 200 °F
Brass 7/16"- 20 UNF-2B connection: 5,000 psi @ 200 °F
Stainless Steel 9/16"- 18 UNF-2B connection: 5,000 psi @ 200 °F
Steel 9/16"- 18 UNF-2B connection: 4,000 psi @ 200 °F
Brass 9/16"- 18 UNF-2B connection: 2,000 psi

⚠ **WARNING:** This product can expose you to chemicals including Lead and Nickel, which are known to the State of California to cause cancer and birth defects or other reproductive harm. For more information go to www.P65Warnings.ca.gov

NOTE: All NOSHOK valve products conform to the MSS SP-99 instrument valves standards, and valves supplied with packing also conform to MSS SP-132 compression packing systems for instrument valves standard.

Adaptive Industrial Solutions | sales@adaptiveind.com | (877) 818-5009

SERIES	**1**	100 Series, hard seat					
CONNECTION SIZES	**01**	1/8" NPT	**42**	7/16"- 20 UNF-2B*			
	02	1/4" NPT	**43**	9/16"- 18 UNF-2B*			
VALVE TYPES	**MMB**	Male-Male, Brass	**MFC**	Male-Female, Steel	**MFS**	Male-Female, Stainless Steel	
	MFB	Male-Female, Brass	**EMFC**	Extended Male-Female, Steel	**EMFS**	Extended Male-Female, Stainless Steel	
	FFB	Female-Female, Brass	**FFC**	Female-Female, Steel	**FFS**	Female-Female, Stainless Steel	
	EFFB	Extended Female-Female, Brass	**EFFC**	Extended Female-Female, Steel	**EFFS**	Extended Female-Female, Stainless Steel	
	MMAB	Male-Male Angle, Brass	**MMAC**	Male-Male Angle, Steel	**MMAS**	Male-Male Angle, Stainless Steel	
	MFAB	Male-Female Angle, Brass	**MFAC**	Male-Female Angle, Steel	**MFAS**	Male-Female Angle, Stainless Steel	
	FFAB	Female-Female Angle, Brass	**FFAC**	Female-Female Angle, Steel	**FFAS**	Female-Female Angle, Stainless Steel	
	MMC	Male-Male, Steel	**MMS**	Male-Male, Stainless Steel			

Please consult your local NOSHOK Distributor or NOSHOK, Inc. for availability and delivery information.

* Available only on EFFB, EFFC and EFFS valve types.

EXAMPLE **102 – FFC**

Series ..... 100 hard seat
Connection size ..... 1/4" NPT
Valve type ..... Female-female, Steel

To meet all of your specific application requirements, the following **additional options** are available for these needle valves. To order all or any of these options, simply add them to the part number as shown in the diagram below.

NOTE 1: The example shown includes ALL possible additional options. Please include ONLY the options required for your application when building your part number. (EXAMPLE: 102-MFC-HL3)

NOTE 2: When a packing option is selected, an o-ring option is NOT available.

ORDERING INFORMATION - ADDITIONAL OPTIONS							
PACKINGS*	**P1**	PTFE	**P2**	Graphite			
STEM TIPS	**T1**	Non-rotating (316 Stainless standard)	**T6**	Ball (carbide)	**T8**	Ball (Monel)	
	T5	Ball (440C Stainless)	**T7**	Ball (ceramic)	**T9**	Non-rotating regulating (316 Stainless)	
O-RINGS**	**EM1**	EPDM	**KZ1**	FFKM (Perfluoroelastomer)	**NB1**	NBR	
PANEL MOUNTINGS	**PM1**	Panel mount (1 nut)	**PM2**	Panel mount (2 nuts)			
HANDLES	**HL2**	2-1/2" "T"	**HL4**	1-3/8" Phenolic			
	HL3	1" Round knurled	**HL5**	1-3/4" Phenolic			

Please consult your local NOSHOK Distributor or NOSHOK, Inc. for availability and delivery information.

* If a packing option is chosen, maximum pressure rating is 6,000 psi. Refer to the "Pressure vs. Temperature: Packing Style with Compatible Fluid" chart at the back of this catalog.

** Other o-ring materials available on request.

Please note that the standard o-ring in all the NOSHOK mini valves is FKM and the standard handles are Brass round knurled (HL3) handles, Steel mini "T" handles (HL1), and 316SS mini "T" handles (HL1).

The handle material will always match the material of the valve, unless otherwise specified. For example, the round knurled (HL3) on a 102-FFB will be Brass. When only the standard configuration is needed, no additional designations are necessary. Please consult the factory for special application requests.

EXAMPLE with Additional Options **102 – FFC – P1 – T1 – PM2 – HL4**

Series..... 100 hard seat
Connection size..... 1/4" NPT
Valve type..... Female-female, Steel
Packing..... PTFE
Stem tip ..... Non-rotating
Panel mount..... Panel mount (2 nuts)
Handle ..... 1-3/8" Phenolic

Dimensions

Male-Male

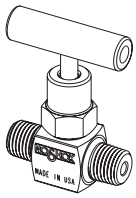

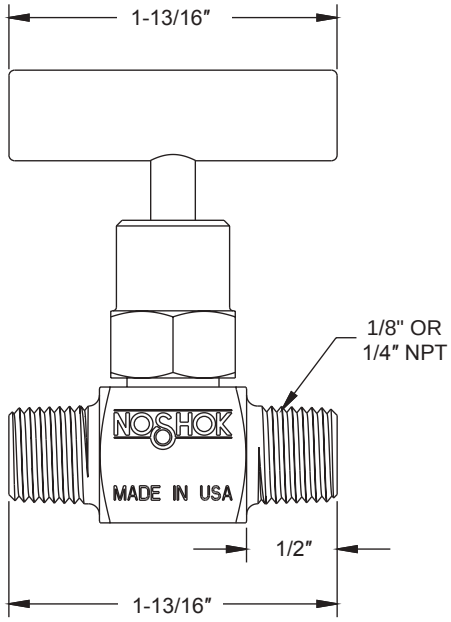

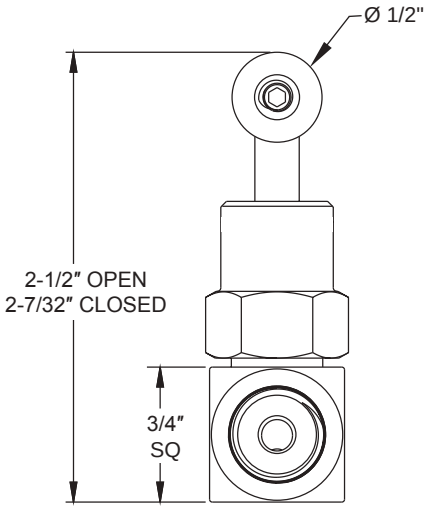

Male-Female

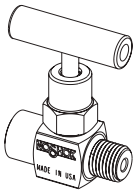

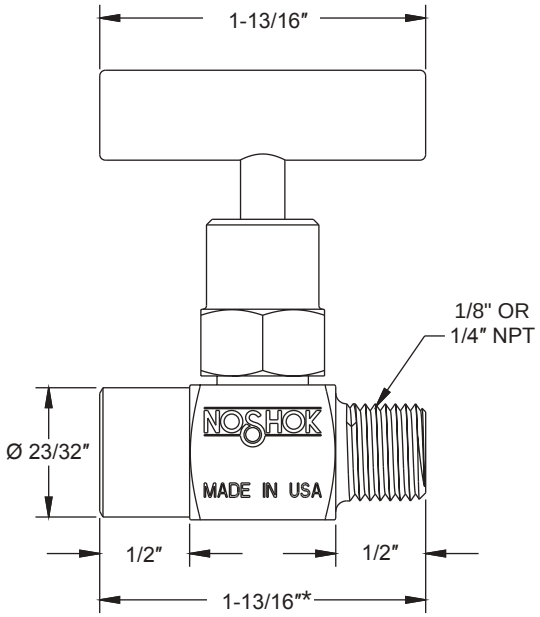

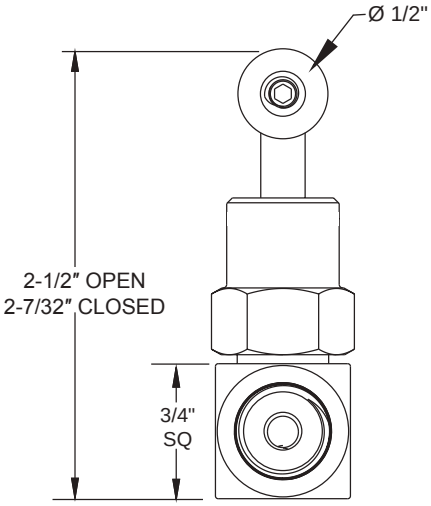

*Dimension on extended version is 2-1/4"

Female-Female

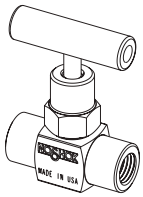

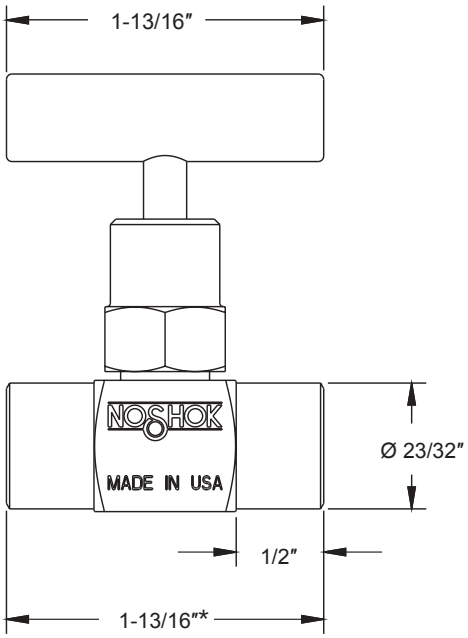

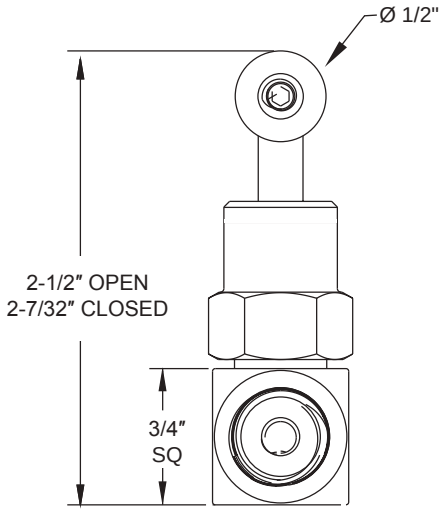

*Dimension on extended version is 2-1/4"

1/8" Male-Male Angle

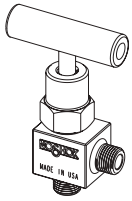

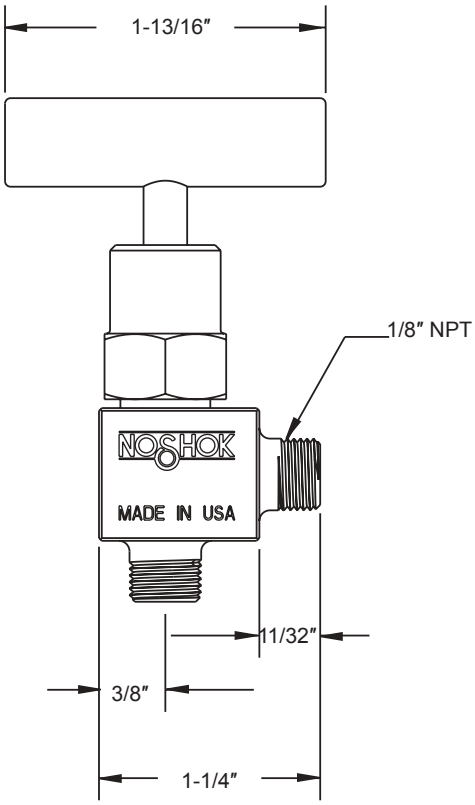

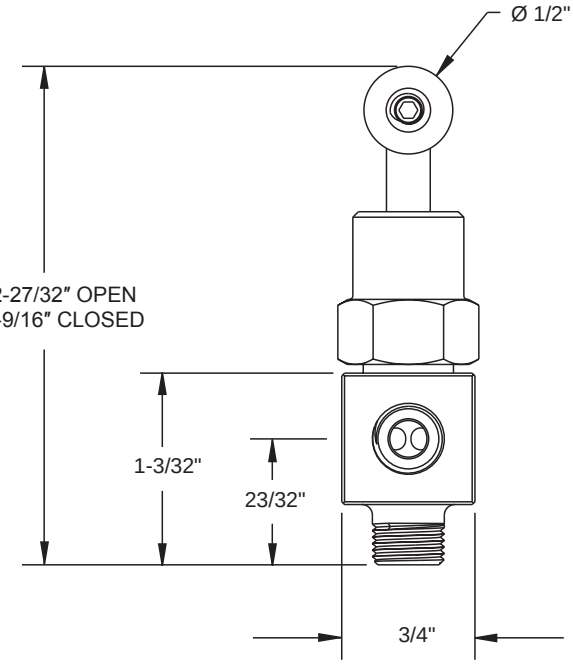

Dimensions

1/4" Male-Male Angle

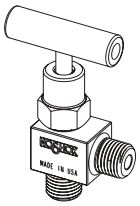

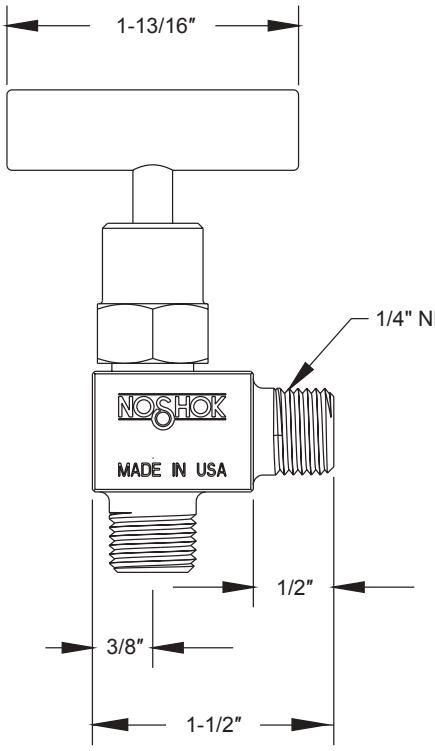

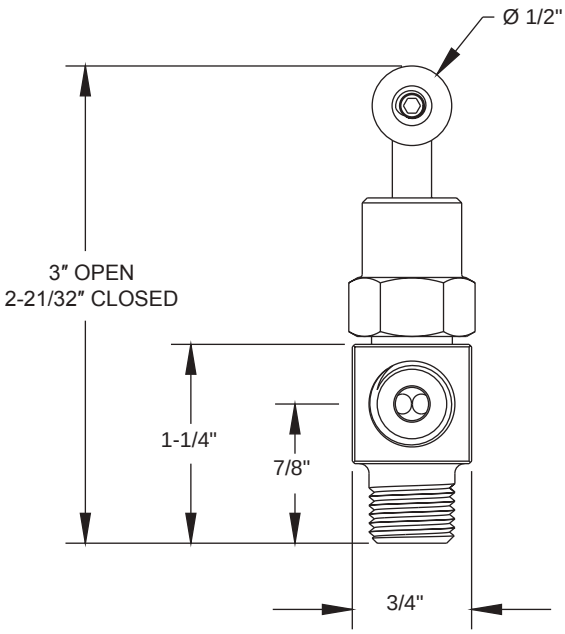

1/8" Male-Female Angle

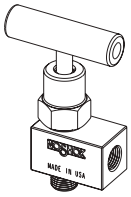

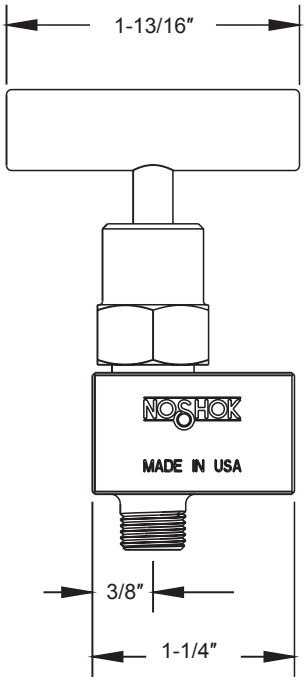

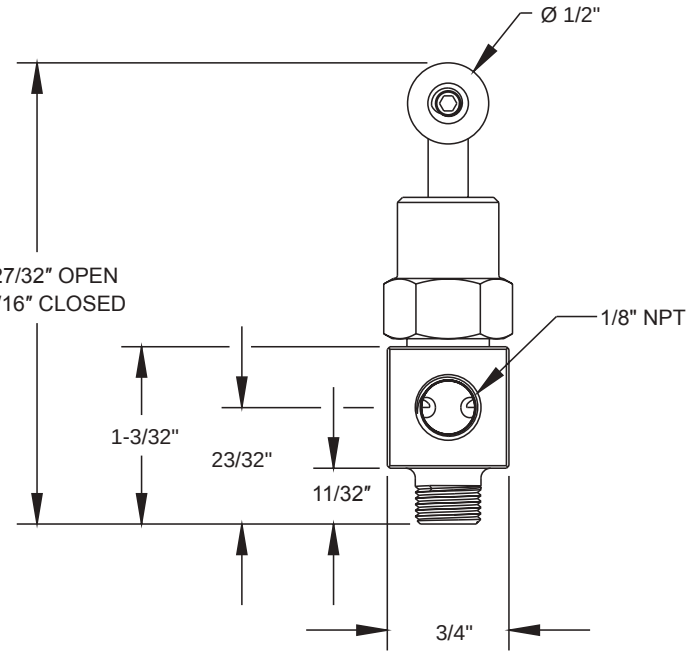

1/4" Male-Female Angle

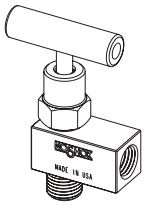

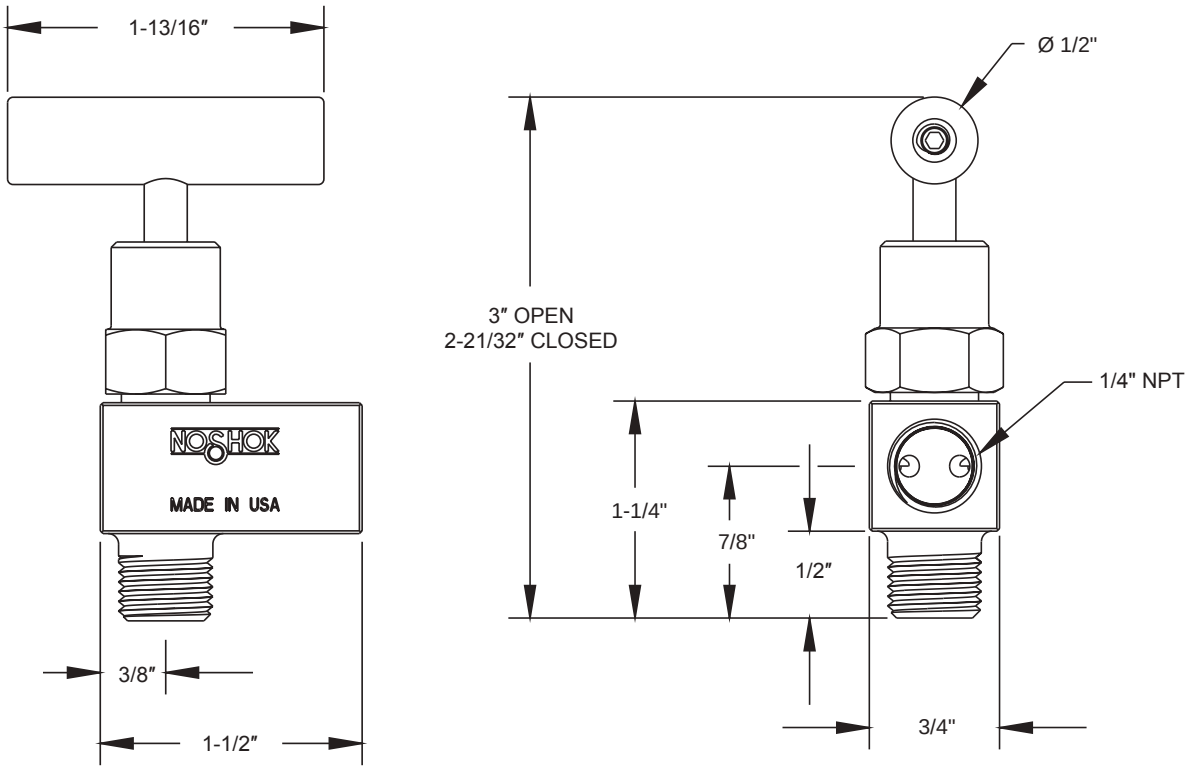

1/8" Female-Female Angle

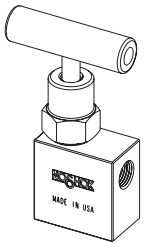

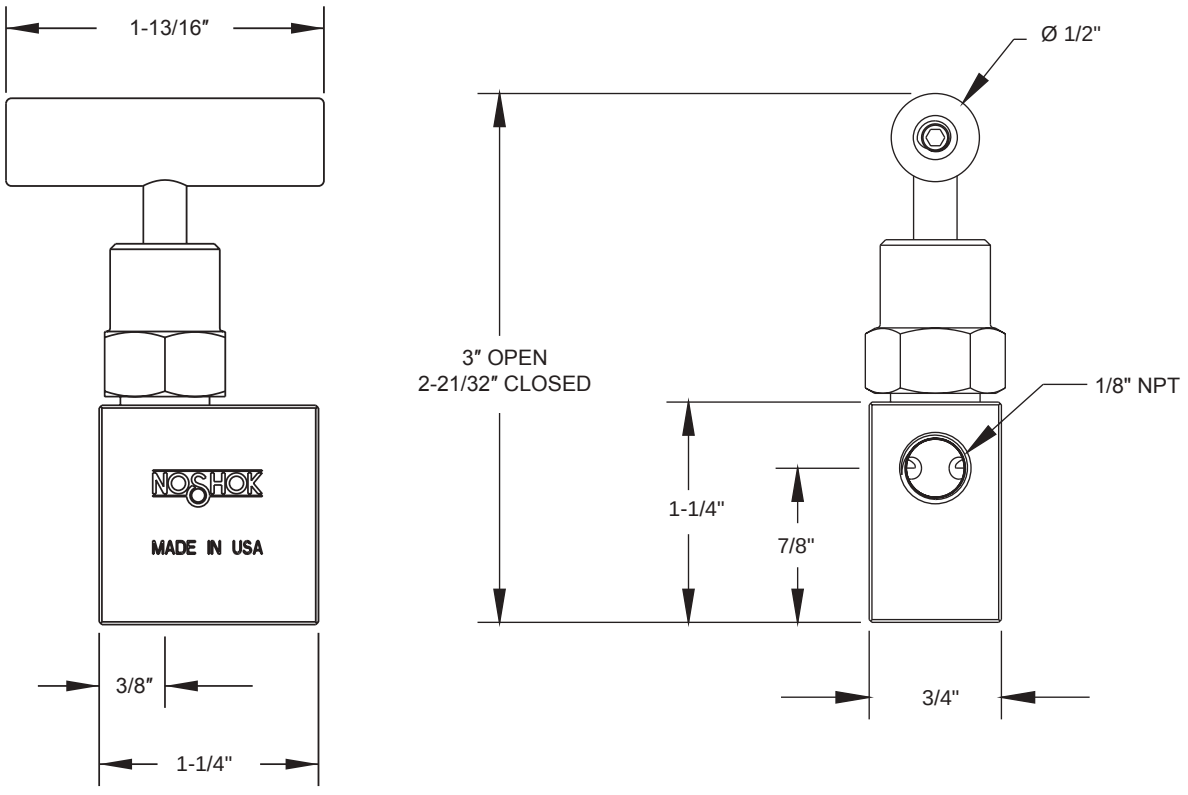

Dimensions

1/4" Female-Female Angle

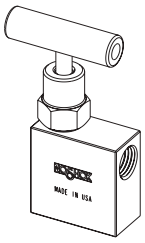



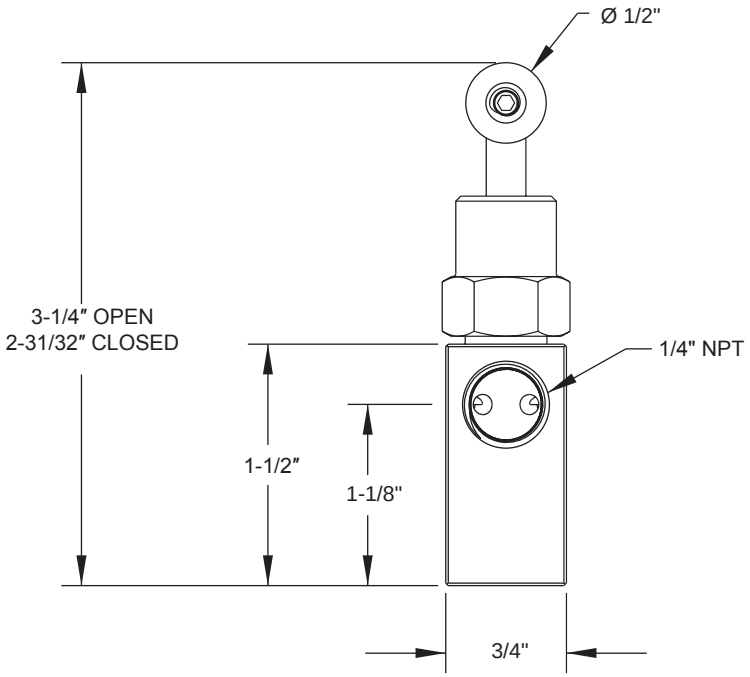

For panel mount, packing, & stem tip dimensions, see pgs. 64-67.

Mini, Hard Seat

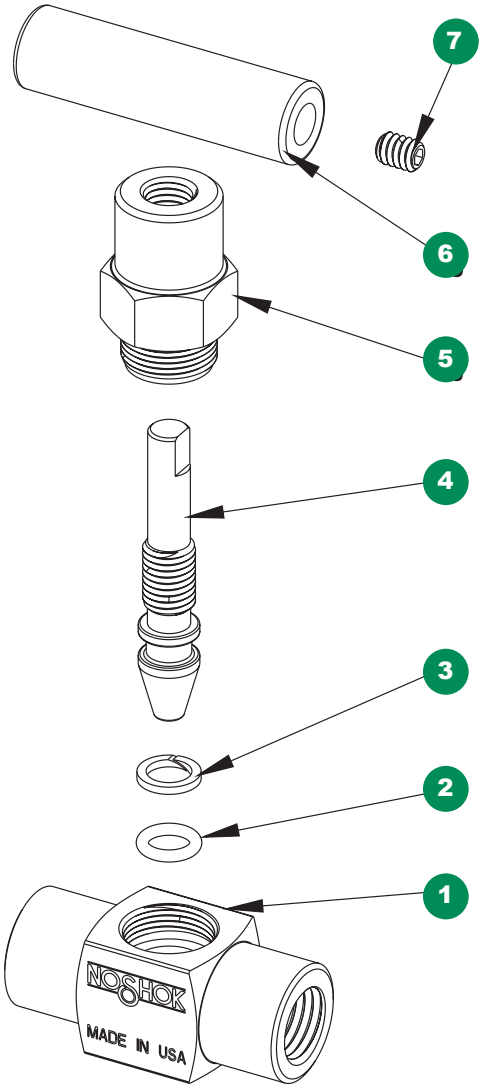

1 Mini valve body
2 FKM o-ring
3 PTFE back-up ring
4 Mini valve stem
5 Mini valve bonnet
6 Mini valve “T” handle
7 Set screw

Option With Packing

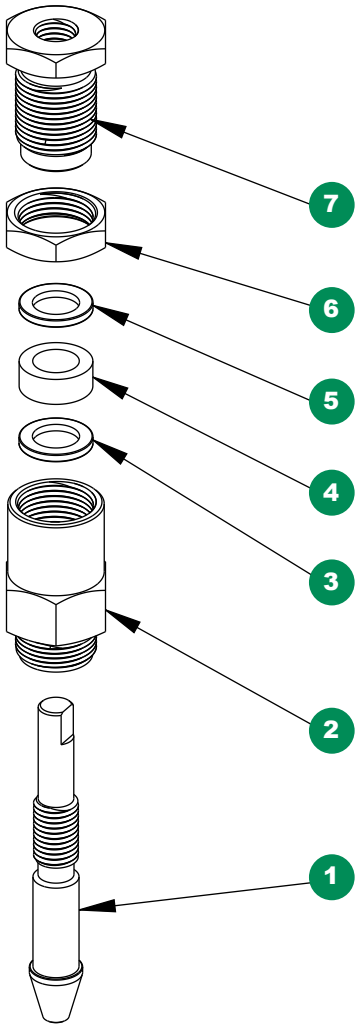

1 Mini valve packing stem
2 Mini valve packing bonnet
3 Packing washer
4 Packing
5 Packing washer
6 Jam nut
7 Packing adjustment screw

150 SERIES



- Compact size valve built for maximum durability and robust performance in the toughest applications
- 100% helium leak tested to 1 x 10^{-4} ml/s for performance and reliability
- Soft tip valves feature a patented Acetal non-rotating soft tip stem, and a back-up metal-to-metal seal **(U.S. Patent 6,820,857)**
- Available in Zinc-Nickel plated Steel, electropolished Stainless Steel, and Brass
- FKM o-ring seal and PTFE back-up ring below the stem threads to protect from corrosion and galling; PTFE packing optional
- All stem threads are rolled for strength and ease of operation
- Patented body-to-bonnet, metal-to-metal seal is designed to significantly increase the pressure range of the valve **(U.S. Patent 7,758,014)**

SPECIFICATIONS	
Materials	Zinc-Nickel plated Steel, electropolished 316 Stainless Steel*, 360 Brass
Connections	1/8" NPT, 1/4" NPT, 7/16"-20 UNF-2B, 9/16"-18 UNF-2B Male-male, Male-female, Female-female, in-line and angled configurations
Pressure rating**	6,000 psi @ 200 °F
Orifice size	0.172"
Flow coefficient	C_V 0.42
Stem seal & type	All 316 Stainless Steel stems with FKM o-ring and PTFE back-up ring below the threads, PTFE packing optional
Options	Panel mountings, o-ring materials, handles, packings, regulating stem and stem tips
Weight	Approximately 0.5 lb.

* All 316SS products meet the requirements of NACE MR0175/ISO 15156-3.
** This pressure ratings applies to all 150 series Mini Valves except the following which have pressure ratings as shown:
Brass 7/16"- 20 UNF-2B connection: 5,000 psi @ 200 °F
Stainless Steel 9/16"- 18 UNF-2B connection: 5,000 psi @ 200 ° F
Steel 9/16"- 18 UNF-2B connection: 4,000 psi @ 200 ° F
Brass 9/16"- 18 UNF-2B connection: 2,000 psi @ 200 °F

⚠ **WARNING:** This product can expose you to chemicals including Lead and Nickel, which are known to the State of California to cause cancer and birth defects or other reproductive harm. For more information go to www.P65Warnings.ca.gov

NOTE: All NOSHOK valve products conform to the MSS SP-99 instrument valves standards, and valves supplied with packing also conform to MSS SP-132 compression packing systems for instrument valves standard.

Adaptive Industrial Solutions | sales@adaptiveind.com | (877) 818-5009

SERIES	1	150 Series, soft tip					
CONNECTION SIZES	**51**	1/8" NPT	**92**	7/16"- 20 UNF-2B*			
	52	1/4" NPT	**93**	9/16"- 18 UNF-2B*			
VALVE TYPES	**MMB**	Male-Male, Brass	**MFC**	Male-Female, Steel	**MFS**	Male-Female, Stainless Steel	
	MFB	Male-Female, Brass	**EMFC**	Extended Male-Female, Steel	**EMFS**	Extended Male-Female, Stainless Steel	
	FFB	Female-Female, Brass	**FFC**	Female-Female, Steel	**FFS**	Female-Female, Stainless Steel	
	EFFB	Extended Female-Female, Brass	**EFFC**	Extended Female-Female, Steel	**EFFS**	Extended Female-Female, Stainless Steel	
	MMAB	Male-Male Angle, Brass	**MMAC**	Male-Male Angle, Steel	**MMAS**	Male-Male Angle, Stainless Steel	
	MFAB	Male-Female Angle, Brass	**MFAC**	Male-Female Angle, Steel	**MFAS**	Male-Female Angle, Stainless Steel	
	FFAB	Female-Female Angle, Brass	**FFAC**	Female-Female Angle, Steel	**FFAS**	Female-Female Angle, Stainless Steel	
	MMC	Male-Male, Steel	**MMS**	Male-Male, Stainless Steel			

Please consult your local NOSHOK Distributor or NOSHOK, Inc. for availability and delivery information.

* Available only on EFFB, EFFC and EFFS valve types.

EXAMPLE **152 – FFC**

Series .....150 soft tip
Connection size .....1/4" NPT
Valve type .....Female-female, Steel

To meet all of your specific application requirements, the following **additional options** are available for these needle valves. To order all or any of these options, simply add them to the part number as shown in the diagram below.

NOTE 1: The example shown includes ALL possible additional options. Please include ONLY the options required for your application when building your part number. (EXAMPLE: 152-MFC-HL3)

NOTE 2: When a packing option is selected, an o-ring option is NOT available.

ORDERING INFORMATION - ADDITIONAL OPTIONS							
PACKING	**P1**	PTFE					
STEM TIPS	**T3**	PCTFE	**T10**	Regulating Acetal	**T12**	Regulating PEEK	
	T4	PEEK	**T11**	Regulating PCTFE			
O-RINGS*	**EM1**	EPDM	**KZ1**	FFKM (Perfluoroelastomer)	**NB1**	NBR	
PANEL MOUNTINGS	**PM1**	Panel mount (1 nut)	**PM2**	Panel mount (2 nuts)			
HANDLE	**HL3**	1" Round knurled					

Please consult your local NOSHOK Distributor or NOSHOK, Inc. for availability and delivery information.

* Other o-ring materials available on request.

Please note that the standard o-ring in all the NOSHOK mini valves is FKM and the standard handles are Brass round knurled (HL3) handles, Steel mini "T" handles (HL7), and 316SS mini "T" handles (HL7).

The handle material will always match the material of the valve, unless otherwise specified. For example, the round knurled (HL3) on a 152-FFB will be Brass. When only the standard configuration is needed, no additional designations are necessary. Please consult the factory for special application requests.

EXAMPLE with Additional Options **152 – FFC – P1 – T3 – PM2 – HL3**

Series.....150 soft tip
Connection size.....1/4" NPT
Valve type.....Female-female, Steel
Packing.....PTFE
Stem tip ..... PCTFE
Panel mount.....Panel mount (2 nuts)
Handle ..... 1" Round knurled

Dimensions

Male-Male

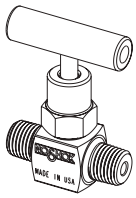

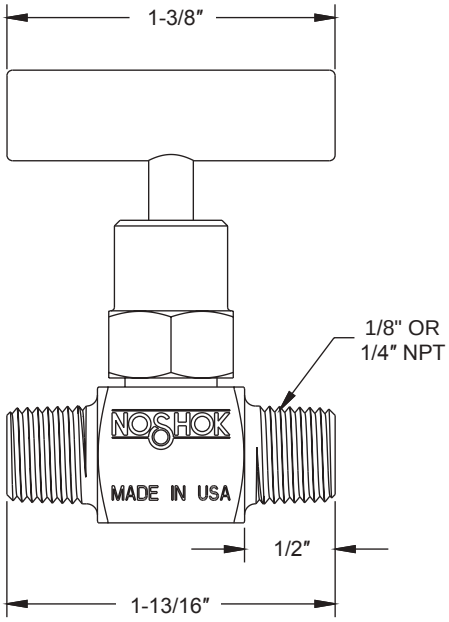

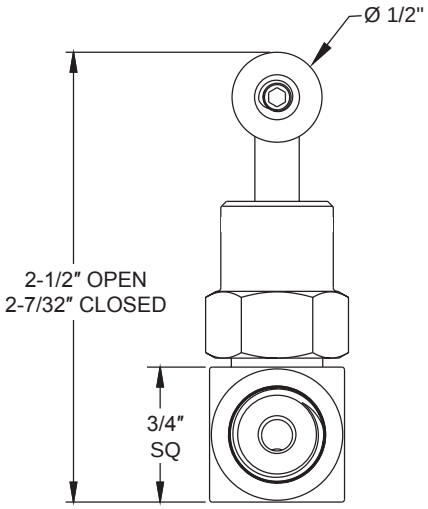

Male-Female

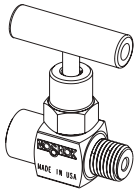

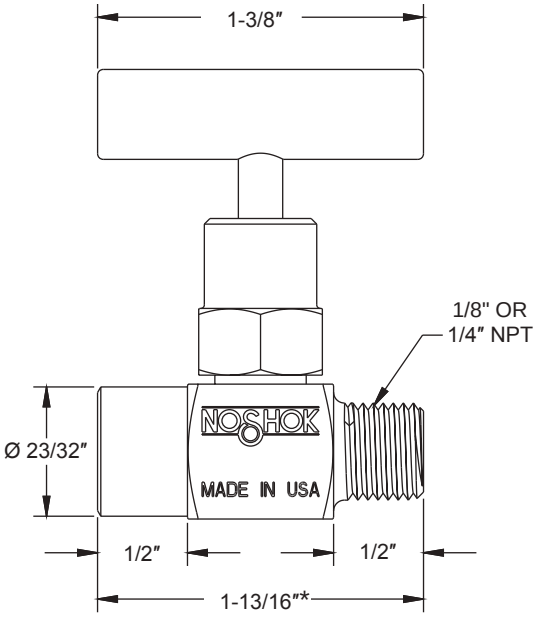

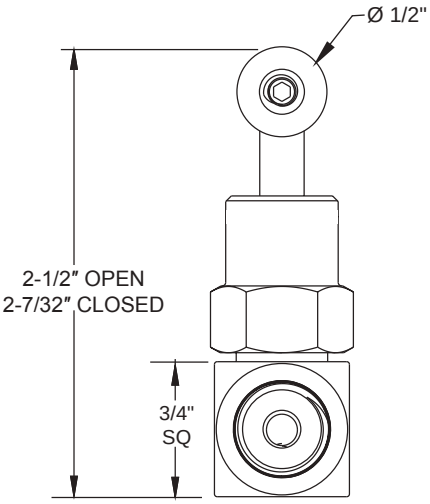

Female-Female

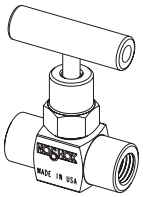

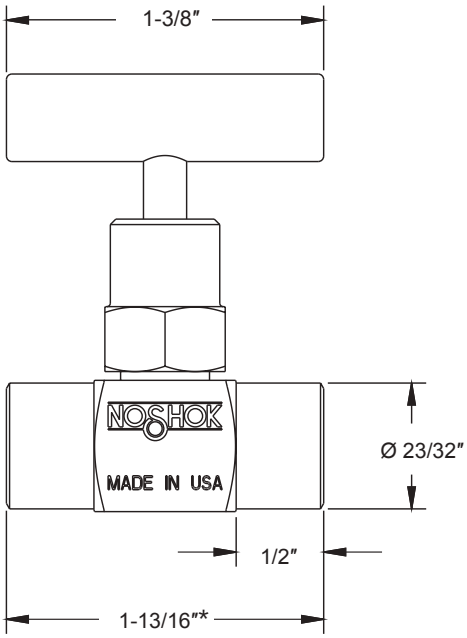

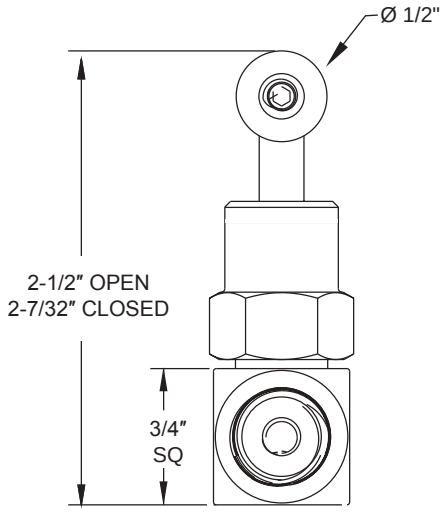

*Dimension on extended version is 2-1/4"

1/8" Male-Male Angle

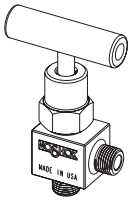

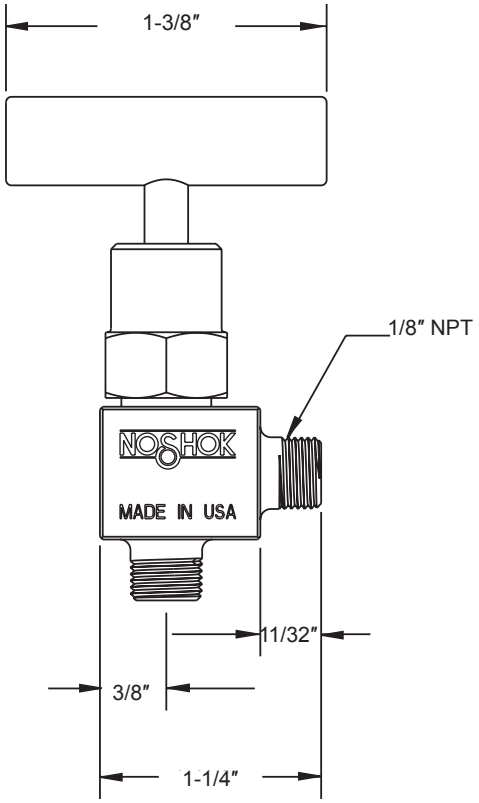

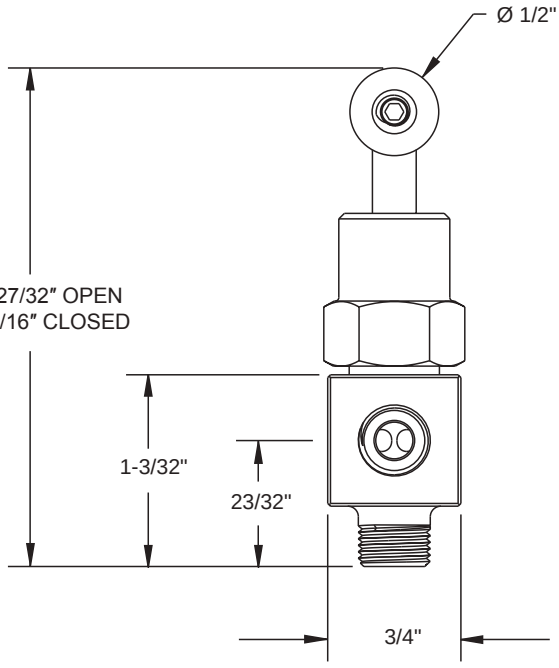

Dimensions

1/4" Male-Male Angle

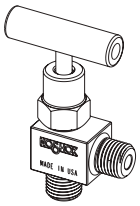

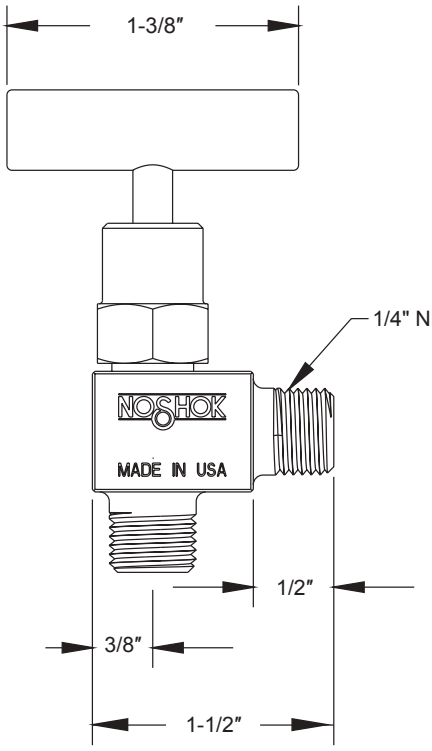

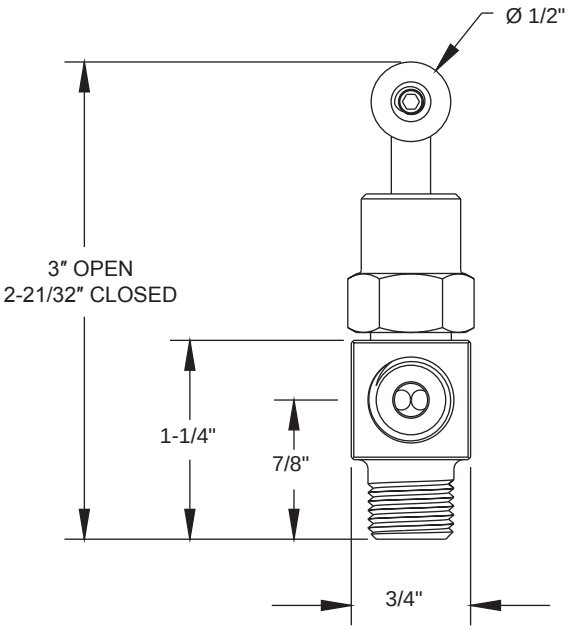

1/8" Male-Female Angle

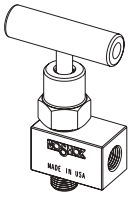

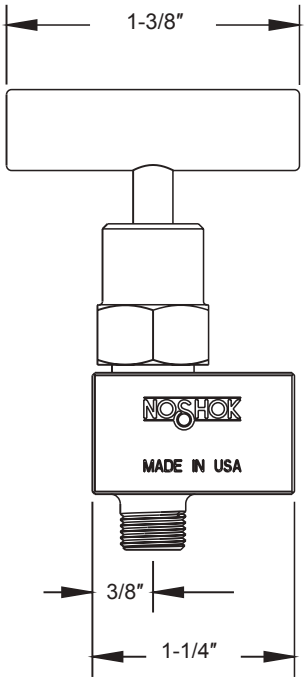

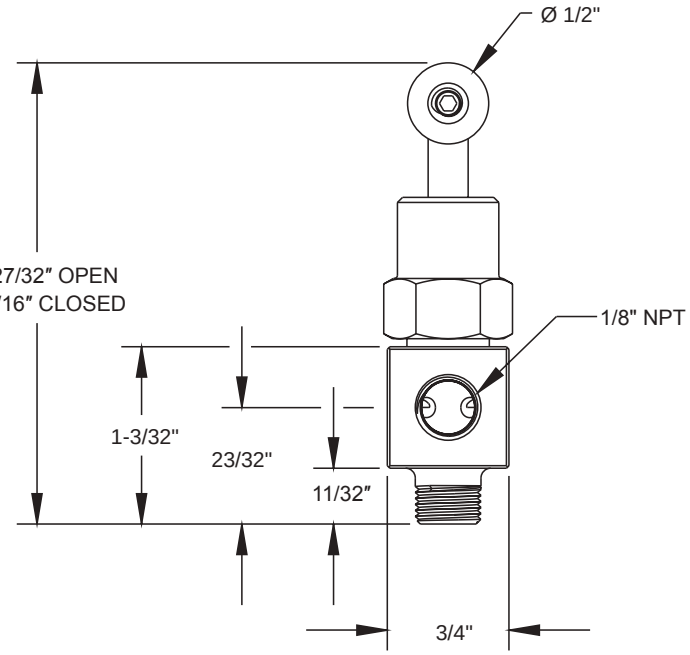

1/4" Male-Female Angle

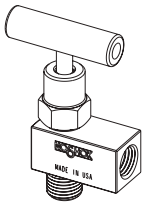

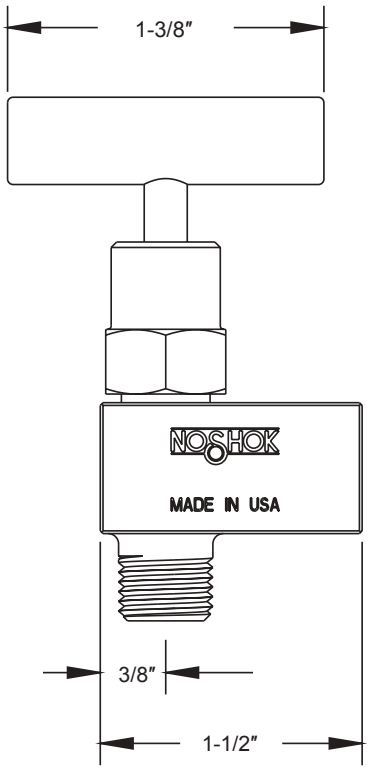

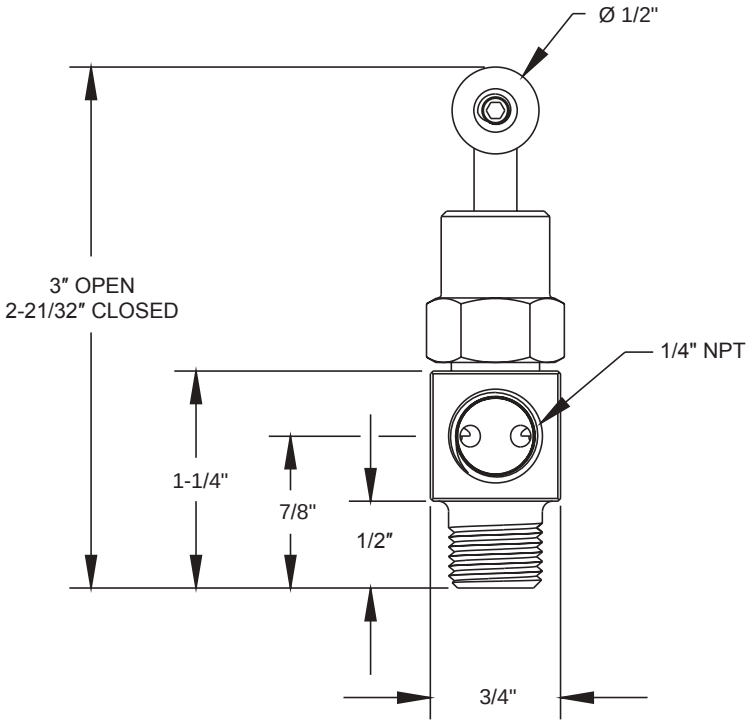

1/8" Female-Female Angle

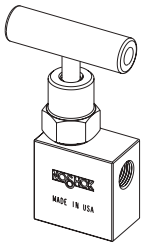

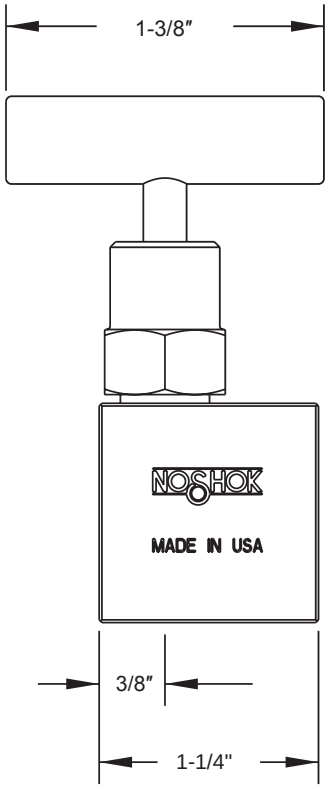

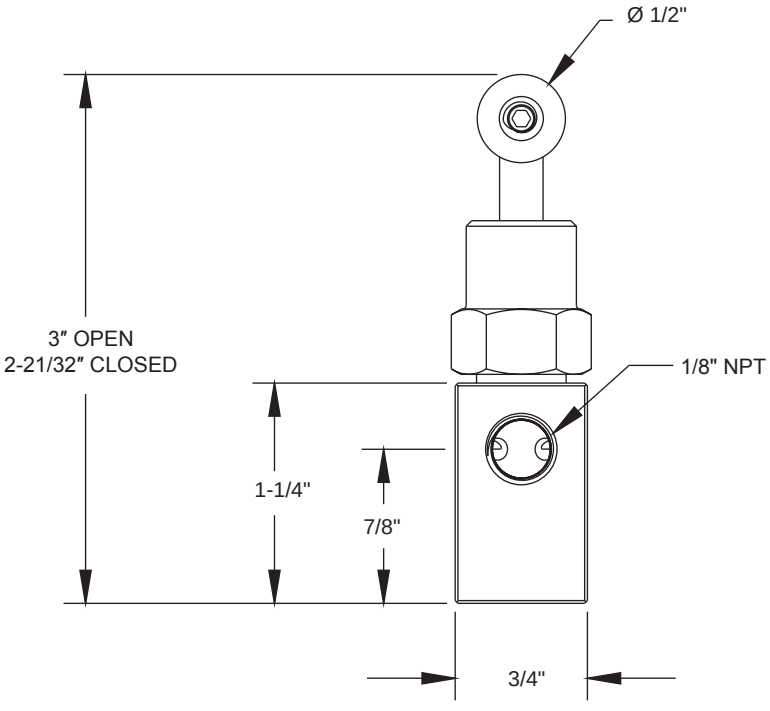

Dimensions

1/4" Female-Female Angle

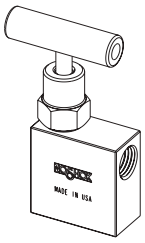



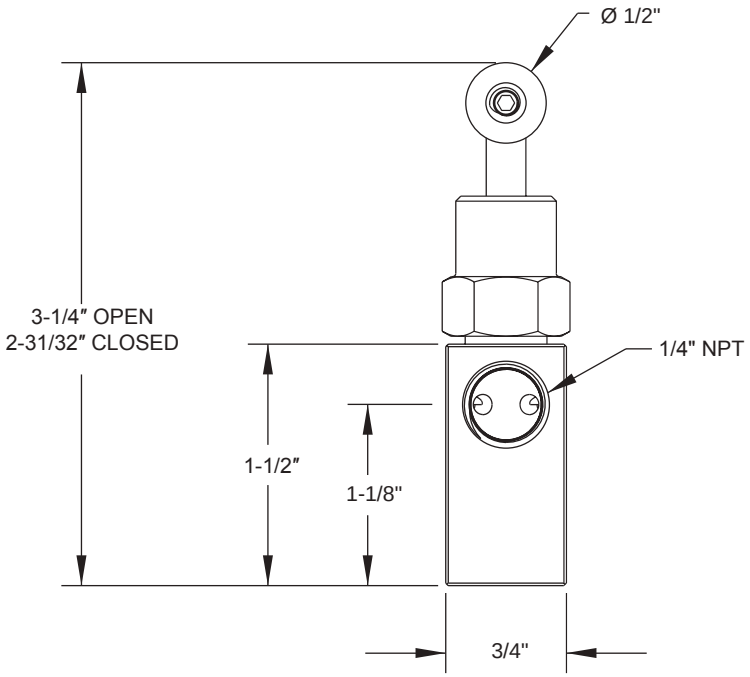

For panel mount, packing, & stem tip dimensions, see pgs. 64-67.

Mini, Soft Tip

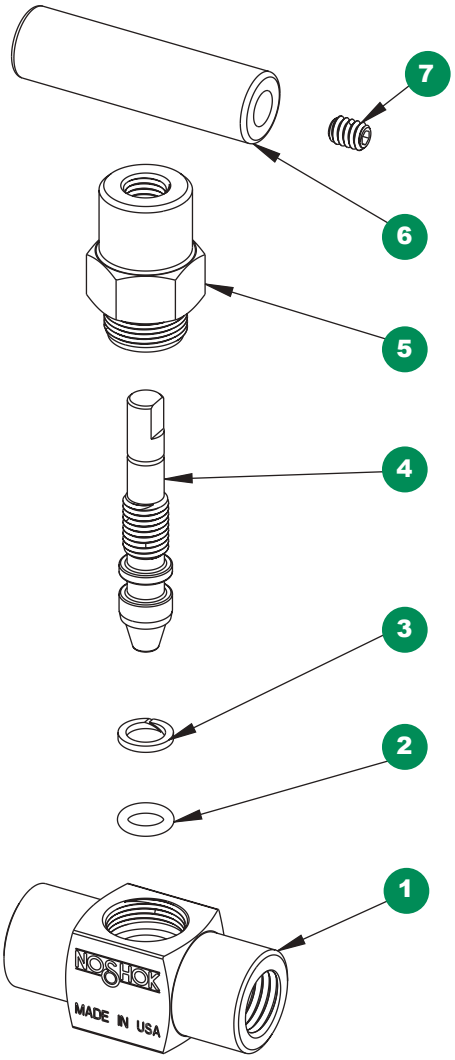

1 Mini valve body
2 FKM o-ring
3 PTFE back-up ring
4 Soft tip stem
5 Mini valve bonnet
6 Mini valve “T” handle
7 Set screw

Option With Packing

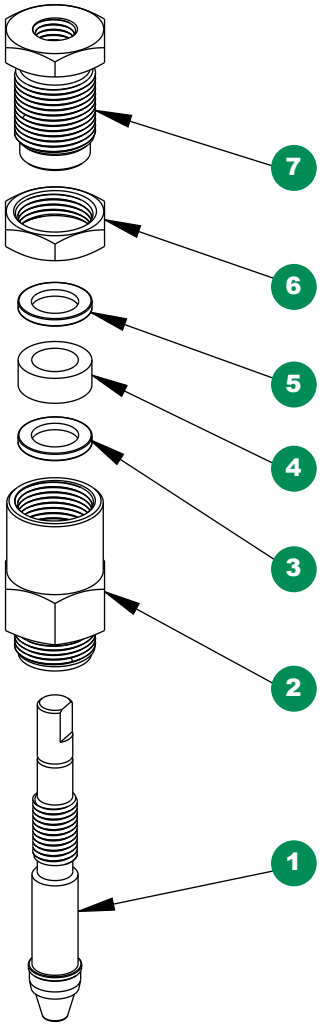

1 Soft tip packing stem
2 Mini valve packing bonnet
3 Packing washer
4 Packing
5 Packing washer
6 Jam nut
7 Packing adjustment screw

Multiport, Hard Seat

200 SERIES



Note: Shown with optional bleed plug.

- Multiport design reduces the number of gauge and other instrument connections to permanent piping installations, decreasing possible leak paths
- Optional bleed plugs further allow pressure to be bled off without disturbing the permanent piping installation
- 100% helium leak tested to 1 x 10^{-4} ml/s for performance and reliability
- Blow-out proof stem provides a secondary stem seal in the full open position
- FKM o-ring seal and PTFE back-up ring below the stem threads to protect from corrosion and galling; PTFE or Graphite packing optional
- All stem threads are rolled for strength and ease of operation
- One-piece bonnet with a metal-to-metal seal to the valve body below the bonnet threads
- Slotted spring pin to prevent accidental loosening
- Vinyl dust cap for bonnet and stem (non-packing)

Multiport Valve Accesssories



Bleed Plug,
see pg. 65 for details.



Plug,
see pg. 65 for details.



Bleed Valve
See pg. 48 for details.

SPECIFICATIONS	
Materials	Zinc-Nickel plated Steel, electropolished 316 Stainless Steel*
Connections	1/2" NPT to 3/4" NPT Male-female
Pressure rating**	10,000 psi @ 200 °F
Orifice size	0.187"
Flow coefficient	C_V 0.44
Stem seal & type	All 316 Stainless Steel stems with FKM o-ring and PTFE back-up ring below the threads, PTFE or Graphite packing optional
Options	Panel mountings, o-ring materials, handles, packings, regulating stem and stem tips
Weight	Approximately 2.2 lb.

* All 316SS products meet the requirements of NACE MR0175/ISO 15156-3.
** If a packing option is chosen, maximum pressure rating is 6,000 psi. Refer to the "Pressure vs. Temperature: Packing Style with Compatible Fluid" chart at the back of this catalog.

⚠ **WARNING:** This product can expose you to chemicals including Lead and Nickel, which are known to the State of California to cause cancer and birth defects or other reproductive harm. For more information go to www.P65Warnings.ca.gov

NOTE: All NOSHOK valve products conform to the MSS SP-99 instrument valves standards, and valves supplied with packing also conform to MSS SP-132 compression packing systems for instrument valves standard.

Adaptive Industrial Solutions | sales@adaptiveind.com | (877) 818-5009

SERIES	2	200 Series, hard seat		
CONNECTION SIZES	04	1/2" NPT	0604	3/4" NPT male - 1/2" NPT male or female
VALVE TYPES	MFC	Male-Female, Steel	MFS	Male-Female, Stainless Steel

Please consult your local NOSHOK Distributor or NOSHOK, Inc. for availability and delivery information.

EXAMPLE

204 – MFC

Series.....200 hard seat
Connection size..... 1/2" NPT
Valve type.....Male-female, Steel

To meet all of your specific application requirements, the following **additional options** are available for these needle valves. To order all or any of these options, simply add them to the part number as shown in the diagram below.

NOTE 1: The example shown includes ALL possible additional options. Please include ONLY the options required for your application when building your part number. (EXAMPLE: 204-MFC-P1)

NOTE 2: When a packing option is selected, an o-ring option is NOT available.

ORDERING INFORMATION - ADDITIONAL OPTIONS						
PACKINGS *	P1	PTFE	P2	Graphite		
STEM TIPS	T1	Non-rotating (316 Stainless)	T6	Ball (carbide)	T8	Ball (Monel)
	T5	Ball (440C Stainless)	T7	Ball (ceramic)	T9	Non-rotating regulating (316 Stainless)
O-RINGS **	EM1	EPDM	KZ1	FFKM (Perfluoroelastomer)	NB1	NBR
PANEL MOUNTINGS	PM1	Panel mount (1 nut)	PM2	Panel mount (2 nuts)		
HANDLES	HL1	1-13/16" Mini "T"	HL4	1-3/8" Phenolic	HL5	1-3/4" Phenolic

Please consult your local NOSHOK Distributor or NOSHOK, Inc. for availability and delivery information.

* If a packing option is chosen, maximum pressure rating is 6,000 psi. Refer to the "Pressure vs. Temperature: Packing Style with Compatible Fluid" chart at the back of this catalog.

** Other o-ring materials available on request.

NOTE: Plugs and bleed plugs are available and can be ordered separately, see page 65.

Please note that the standard o-ring in all the NOSHOK valves is FKM and the standard handles are “T” handles (HL2).

The handle material will always match the material of the valve, unless otherwise specified. For example, the “T” handle (HL2) on the 204-MFC will be Steel. When only the standard configuration is needed, no additional designations are necessary. Please consult the factory for special application requests.

EXAMPLE with Additional Options

204 – MFC– T5 – EM1

Series..... 200 hard seat
Connection size.....1/2" NPT
Valve type..... Male-female, Steel
Stem tip .....Ball (440C Stainless)
O-ring.....EPDM

Dimensions

Male-Female

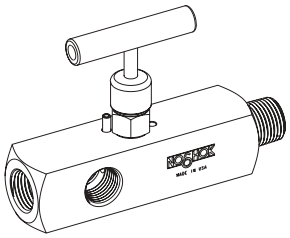

Front View

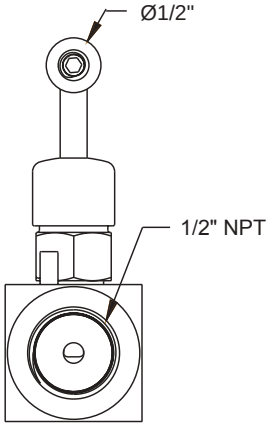

Side View

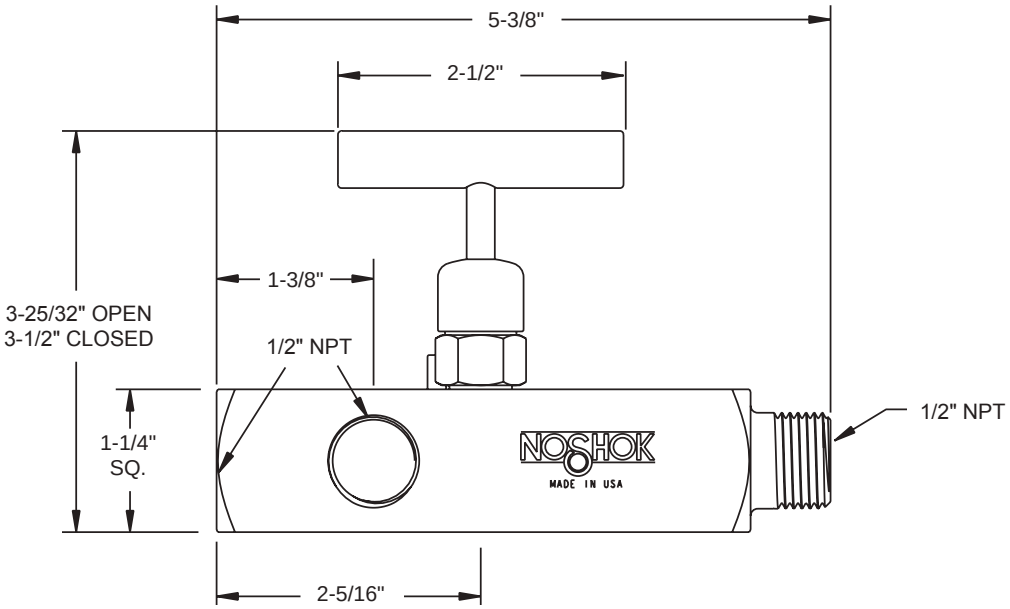

For panel mount, packing, & stem tip dimensions, see pgs. 64-67.

Multiport, Hard Seat

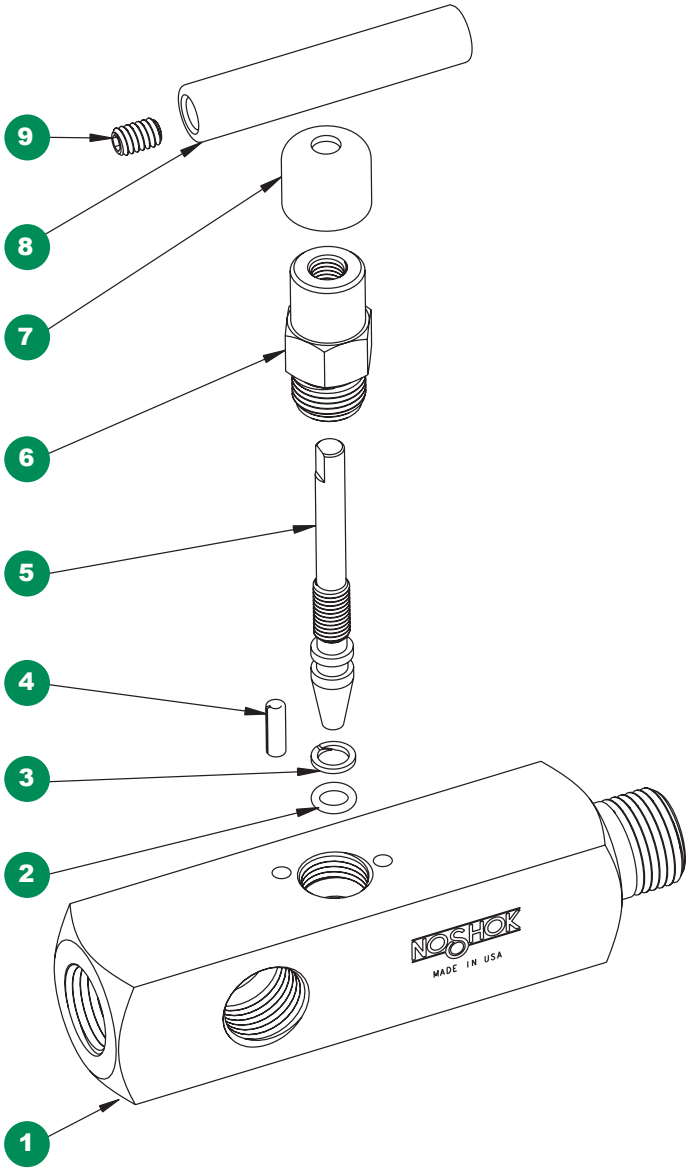

1 Valve body
2 FKM o-ring
3 PTFE back-up ring
4 Slotted spring pin
5 Valve stem
6 Valve bonnet
7 Dust cap
8 Valve “T” handle
9 Set screw

Option With Packing

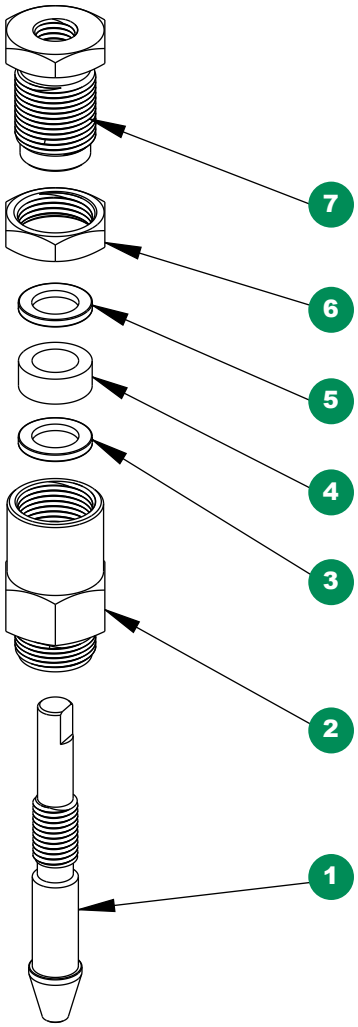

1 Valve packing stem
2 Valve packing bonnet
3 Packing washer
4 Packing
5 Packing washer
6 Jam nut
7 Packing adjustment screw

Multiport, Soft Seat

300 SERIES



Note: Shown with optional bleed plug.

- Multiport design reduces the number of gauge and other instrument connections to permanent piping installations, decreasing possible leak paths
- Optional bleed plugs further allow pressure to be bled off without disturbing the permanent piping installation
- 100% helium leak tested to 1 x 10^{-4} ml/s for performance and reliability
- Replaceable Acetal seat and straight through porting for bidirectional, high capacity flow and easy roddable cleaning
- PCTFE or PEEK soft seat optional
- Blow-out proof stem provides a secondary stem seal in the full open position
- FKM o-ring seal and PTFE back-up ring below the stem threads to protect from corrosion and galling; PTFE packing optional
- All stem threads are rolled for strength and ease of operation
- One-piece bonnet with a metal-to-metal seal to the valve body below the bonnet threads
- Slotted spring pin to prevent accidental loosening
- Vinyl dust cap for bonnet and stem (non-packing)

Multiport Valve Accesssories



Bleed Plug,
see pg. 65 for details.



Plug,
see pg. 65 for details.



Bleed Valve
See pg. 48 for details.

SPECIFICATIONS	
Materials	Zinc-Nickel plated Steel, electropolished 316 Stainless Steel*
Connections	1/2" NPT to 3/4" NPT Male-female Straight through porting for bidirectional, high capacity flow
Pressure rating	6,000 psi @ 200 °F
Orifice size	0.187"
Flow coefficient	C_V 0.64
Stem seal & type	All 316 Stainless Steel stems with FKM o-ring and PTFE back-up ring below the threads, PTFE packing optional
Options	Panel mountings, o-ring materials, handles, packings, regulating stem and stem tips
Weight	Approximately 2.2 lb.

* All 316SS products meet the requirements of NACE MR0175/ISO 15156-3.

⚠ **WARNING:** This product can expose you to chemicals including Lead and Nickel, which are known to the State of California to cause cancer and birth defects or other reproductive harm. For more information go to www.P65Warnings.ca.gov

NOTE: All NOSHOK valve products conform to the MSS SP-99 instrument valves standards, and valves supplied with packing also conform to MSS SP-132 compression packing systems for instrument valves standard.

SERIES	3	300 Series, soft seat			
CONNECTION SIZES	04	1/2" NPT	0604	3/4" NPT male - 1/2" NPT female	
VALVE TYPES	MFC	Male-Female, Steel	MFS	Male-Female, Stainless Steel	

Please consult your local NOSHOK Distributor or NOSHOK, Inc. for availability and delivery information.

EXAMPLE **304 – MFC**

Series.....300 soft seat
Connection size.....1/2" NPT
Valve type.....Male-female, Steel

To meet all of your specific application requirements, the following **additional options** are available for these needle valves. To order all or any of these options, simply add them to the part number as shown in the diagram below.

NOTE 1: The example shown includes ALL possible additional options. Please include ONLY the options required for your application when building your part number. (EXAMPLE: 304-MFC-HL5)

NOTE 2: When a packing option is selected, an o-ring option is NOT available.

ORDERING INFORMATION - ADDITIONAL OPTIONS						
SOFT SEATS	PK1	PEEK	KF1	PCTFE		
PACKING	P1	PTFE				
STEM TIP	T1	Non-rotating (316 Stainless)				
O-RINGS*	EM1	EPDM	KZ1	FFKM (Perfluoroelastomer)	NB1	NBR
PANEL MOUNTINGS	PM1	Panel mount (1 nut)	PM2	Panel mount (2 nuts)		
HANDLES	HL4	1-3/8" Phenolic	HL5	1-3/4" Phenolic		

Please consult your local NOSHOK Distributor or NOSHOK, Inc. for availability and delivery information.

* Other o-ring materials available on request.

NOTE: Plugs and bleed plugs are available and can be ordered separately, see page 65.

Please note that the standard o-ring in all the NOSHOK valves is FKM and the standard handles are “T” handles (HL2).

The handle material will always match the material of the valve, unless otherwise specified. For example, the “T” handle (HL2) on the 304-MFC will be Steel. When only the standard configuration is needed, no additional designations are necessary. Please consult the factory for special application requests.

EXAMPLE with Additional Options **304 – MFC – PK1 – P1 – HL5**

Series..... 300 soft seat
Connection size..... 1/2" NPT
Valve type.....Male-female, Steel
Soft seat ..... PEEK
Packing.....PTFE
Handle .....1-3/4" Phenolic

Dimensions

Male-Female

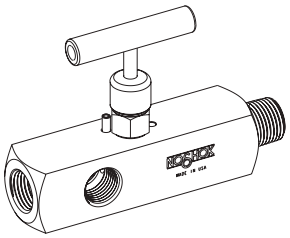

Front View

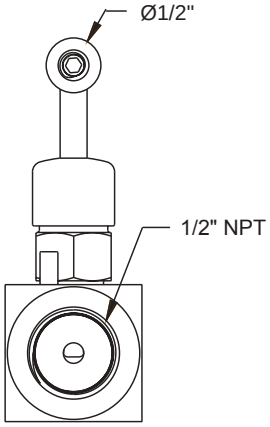

Side View

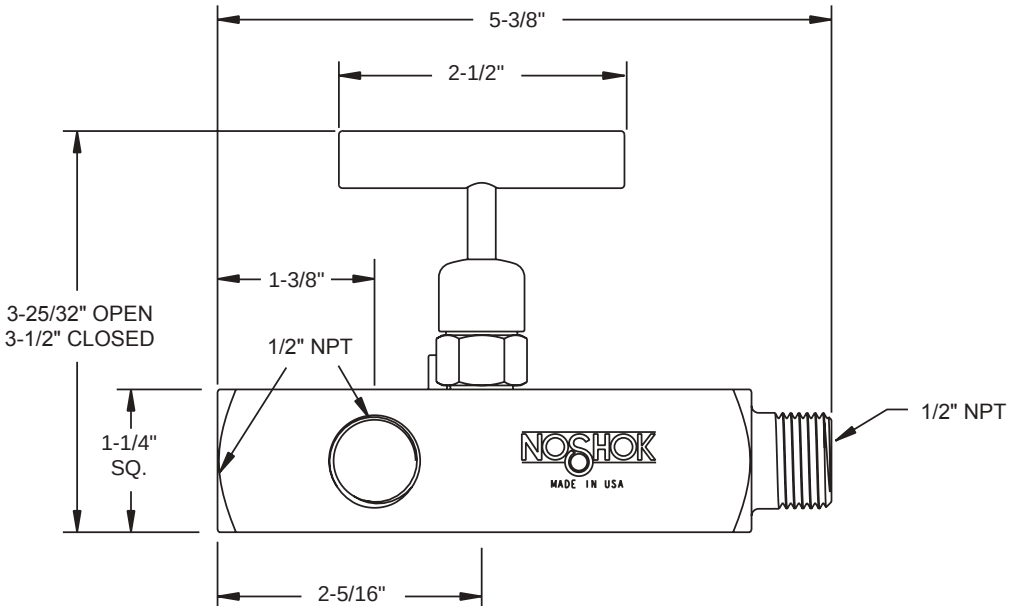

For panel mount, packing, & stem tip dimensions, see pgs. 64-67.

Multiport, Soft Seat

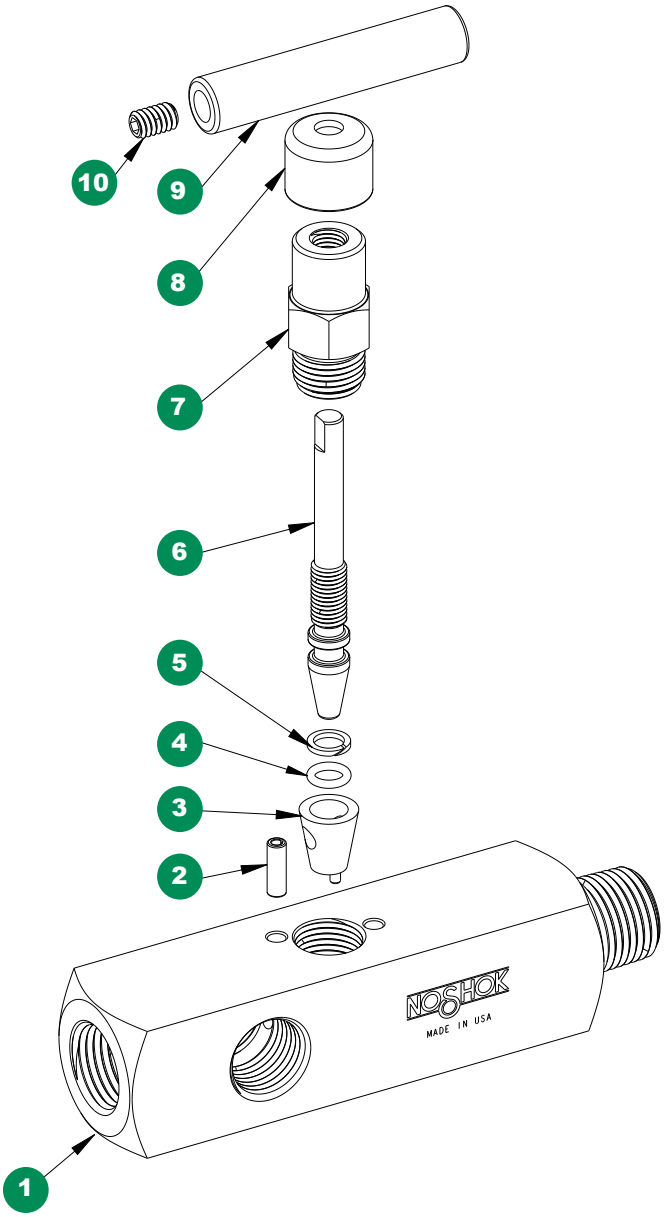

1 Valve body
2 Slotted spring pin
3 Acetal seat
4 FKM oring
5 PTFE back-up ring
6 Valve stem
7 Valve bonnet
8 Dust cap
9 Valve “T” handle
10 Set screw

Option With Packing

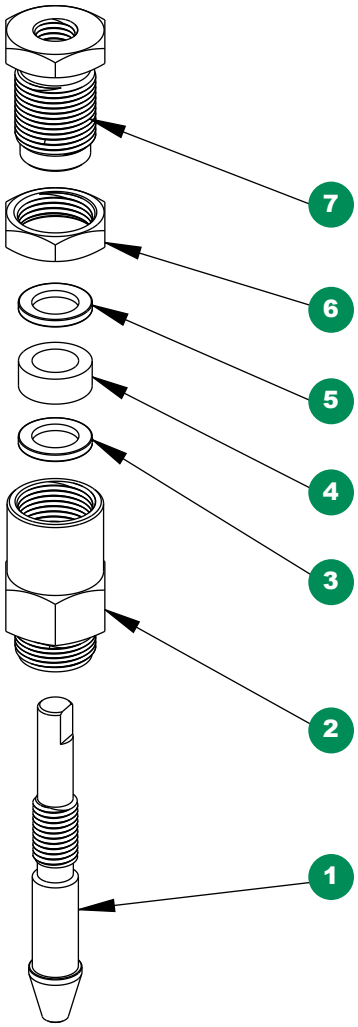

1 Valve packing stem
2 Valve packing bonnet
3 Packing washer
4 Packing
5 Packing washer
6 Jam nut
7 Packing adjustment screw

400 SERIES



- 100% helium leak tested to 1 x 10^{-4} ml/s for performance and reliability
- Blow-out proof stem provides a secondary stem seal in the full open position
- FKM o-ring seal and PTFE back-up ring below the stem threads to protect from corrosion and galling; PTFE or Graphite packing optional (certain NPT sizes only)
- All stem threads are rolled for strength and ease of operation
- One-piece bonnet with a metal-to-metal seal to the valve body below the bonnet threads
- Slotted spring pin to prevent accidental loosening
- Vinyl dust cap for bonnet and stem (non-packing)

SPECIFICATIONS	
Materials	Zinc-Nickel plated Steel, electropolished 316 Stainless Steel*
Connections	1/4", 3/8", 1/2", 3/4", 1", 1-1/4" & 1-1/2" NPT 7/16"-20 UNF (#4 SAE, J1926) Male-female, Female-female, in-line and angled configurations
Pressure rating**	10,000 psi @ 200 °F for 1/4" NPT to 1/2" NPT 8,000 psi @ 200 °F for 3/4" NPT to 1-1/2" NPT
Orifice sizes	1/4" - 1/2" NPT: 0.187" 3/4" - 1-1/2" NPT: 0.438"
Flow coefficient	1/4" - 1/2" NPT: C_V 0.44 3/4" - 1-1/2" NPT: C_V 2.70
Stem seal & type	All 316 Stainless Steel stems with FKM o-ring and PTFE back-up ring below the threads, PTFE or Graphite packing optional for 1/4", 3/8" & 1/2" NPT only
Options	Panel mountings, o-ring materials, handles, packings, regulating stem and stem tips
Weight	Approximately 1.3 lb. up to 1/2" Approximately 4.5 lb. Large Hex, Female-Female Approximately 6 lb. Large Hex, Male-Female

* All 316SS products meet the requirements of NACE MR0175/ISO 15156-3.
** If a packing option is chosen, maximum pressure rating is 6,000 psi. Refer to the "Pressure vs. Temperature: Packing Style with Compatible Fluid" chart at the back of this catalog.

⚠ **WARNING:** This product can expose you to chemicals including Lead and Nickel, which are known to the State of California to cause cancer and birth defects or other reproductive harm. For more information go to www.P65Warnings.ca.gov

NOTE: All NOSHOK valve products conform to the MSS SP-99 instrument valves standards, and valves supplied with packing also conform to MSS SP-132 compression packing systems for instrument valves standard.

Adaptive Industrial Solutions | sales@adaptiveind.com | (877) 818-5009

SERIES	4	400 Series, hard seat			
CONNECTION SIZES	**02**	1/4" NPT	**06**	3/4" NPT	**12** 1-1/2" NPT
	03	3/8" NPT	**08**	1" NPT	**42** 7/16"-20 UNF (#4 SAE, J1926)
	04	1/2" NPT	**10**	1-1/4" NPT	
VALVE TYPES	**MFC**	Male-Female, Steel	**MFS**	Male-Female, Stainless Steel	
	FFC	Female-Female, Steel	**FFS**	Female-Female, Stainless Steel	
	MFAC	Male-Female Angle, Steel	**MFAS**	Male-Female Angle, Stainless Steel	
	FFAC	Female-Female Angle, Steel	**FFAS**	Female-Female Angle, Stainless Steel	

Please consult your local NOSHOK Distributor or NOSHOK, Inc. for availability and delivery information.

EXAMPLE **404 – FFC**

Series.....400 hard seat
Connection size.....1/2" NPT
Valve type.....Female-female, Steel

To meet all of your specific application requirements, the following **additional options** are available for these needle valves. To order all or any of these options, simply add them to the part number as shown in the diagram below.

NOTE 1: The example shown includes ALL possible additional options. Please include ONLY the options required for your application when building your part number. (EXAMPLE: 404-FFC-PM2)

NOTE 2: When a packing option is selected, an o-ring option is NOT available.

NOTE 3: Packing options are NOT available on 3/4" NPT through 1-1/2" NPT valves.

ORDERING INFORMATION - ADDITIONAL OPTIONS						
PACKINGS†	**P1**	PTFE	**P2**	Graphite		
STEM TIPS	**T1**	Non-rotating (316 Stainless)	**T6**	Ball (carbide)	**T8**	Ball (Monel)
	T5	Ball (440C Stainless)	**T7**	Ball (ceramic)	**T9**	Non-rotating regulating (316 Stainless)
O-RINGS*	**EM1**	EPDM	**KZ1**	FFKM (Perfluoroelastomer)	**NB1**	NBR
PANEL MOUNTINGS	**PM1**	Panel mount (1 nut)	**PM2**	Panel mount (2 nuts)		
HANDLES	**HL4**	1-3/8" Phenolic	**HL5**	1-3/4" Phenolic	**HL9**	2-3/8" Phenolic**

Please consult your local NOSHOK Distributor or NOSHOK, Inc. for availability and delivery information.

† For 1/4", 3/8" and 1/2" NPT only. If a packing option is chosen, maximum pressure rating is 6,000 psi. Refer to the "Pressure vs. Temperature: Packing Style with Compatible Fluid" chart at the back of this catalog.
* Other o-ring materials available on request.
** For 3/4" NPT to 1-1/2" NPT only.

The standard o-ring in all the NOSHOK valves is FKM and the standard handles are "T" handles (HL2).

The handle material will always match the material of the valve, unless otherwise specified. For example, the "T" handle (HL2) on the 404-FFC will be Steel. When only the standard configuration is needed, no additional designations are necessary. Please consult the factory for special application requests.

EXAMPLE with Additional Options **404 – FFC – P1 – T1 – PM2 – HL5**

Series.....400 hard seat
Connection size..... 1/2" NPT
Valve type.....Female-female, Steel
Packing.....PTFE
Stem tip .....Non-rotating
Panel mount..... Panel mount (2 nuts)
Handle .....1-3/4" Phenolic

Dimensions

1/4" -1/2" Female-Female

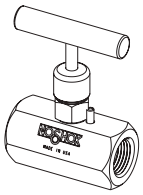

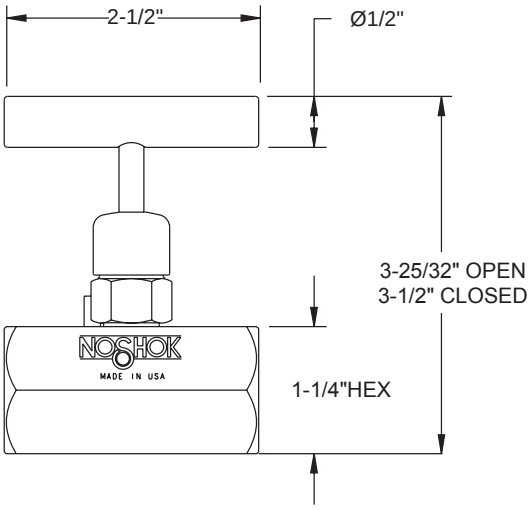

1/4" -1/2" Male-Female

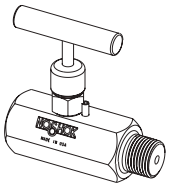

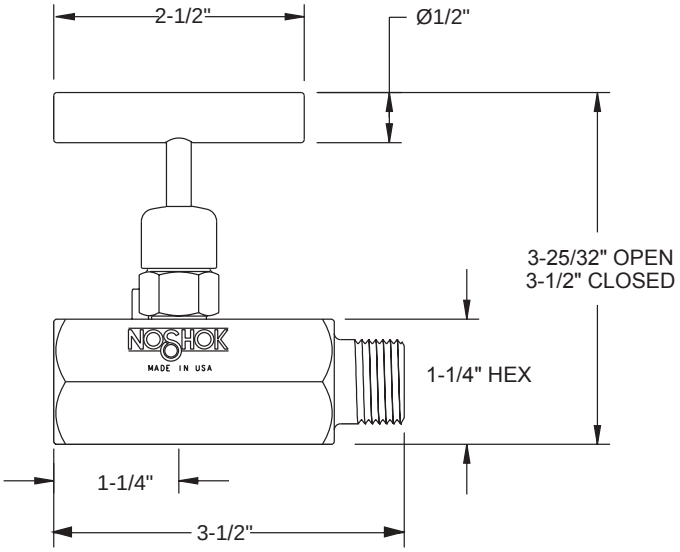

1/4" Female-Female Angle

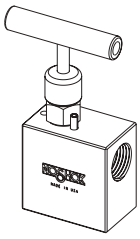

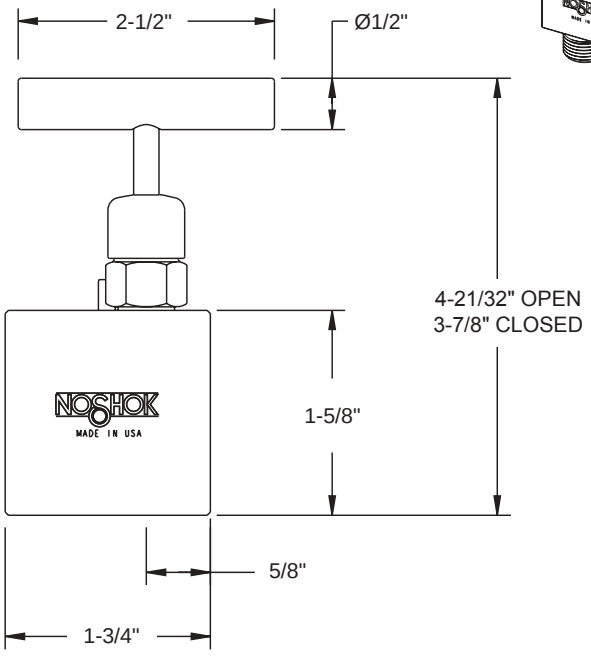

1/4" Male-Female Angle

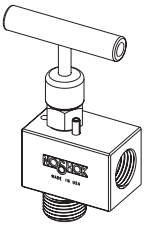

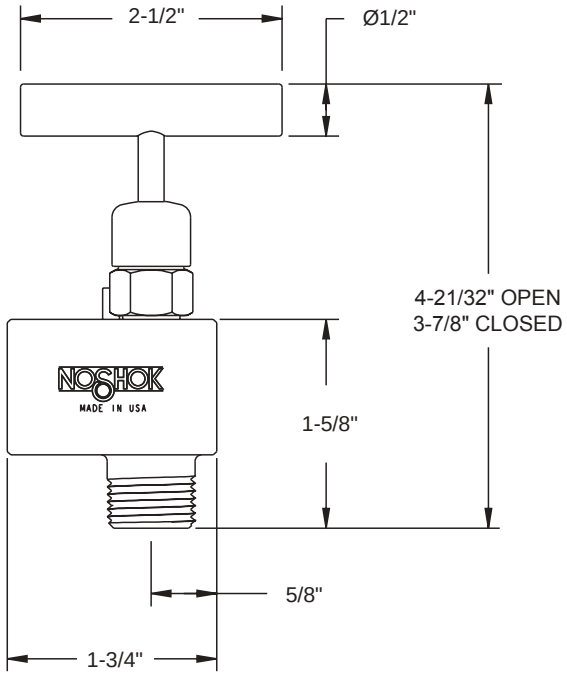

1/2" Female-Female Angle

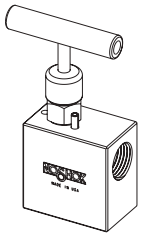

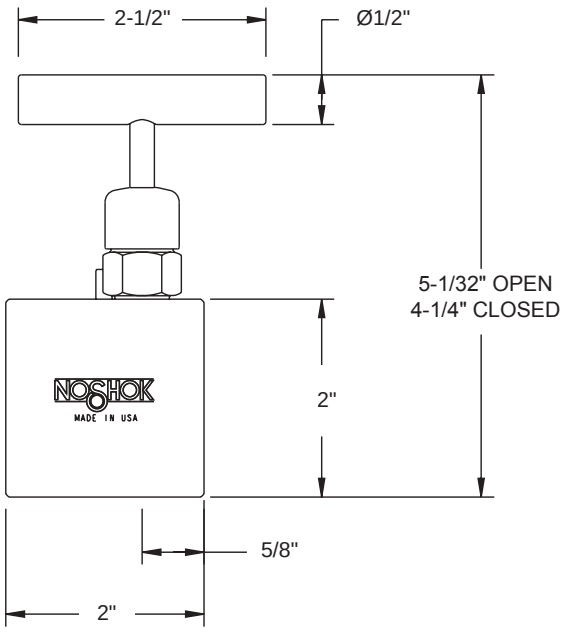

1/2" Male-Female Angle

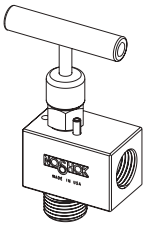

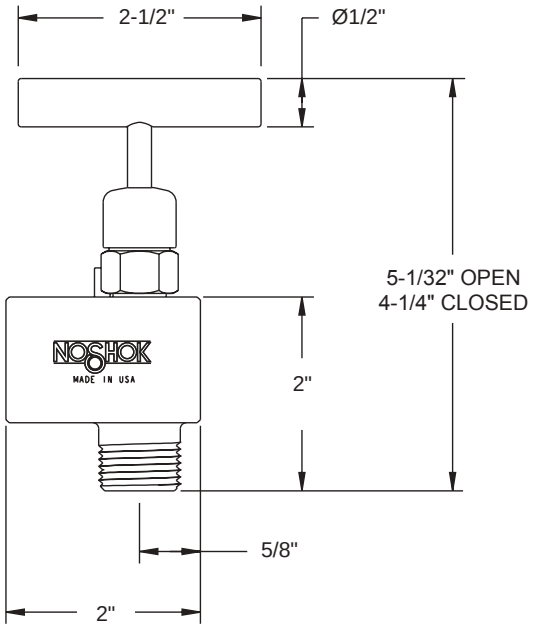

Dimensions

3/4" - 1-1/2" Female-Female

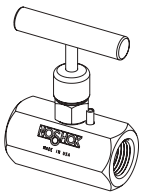

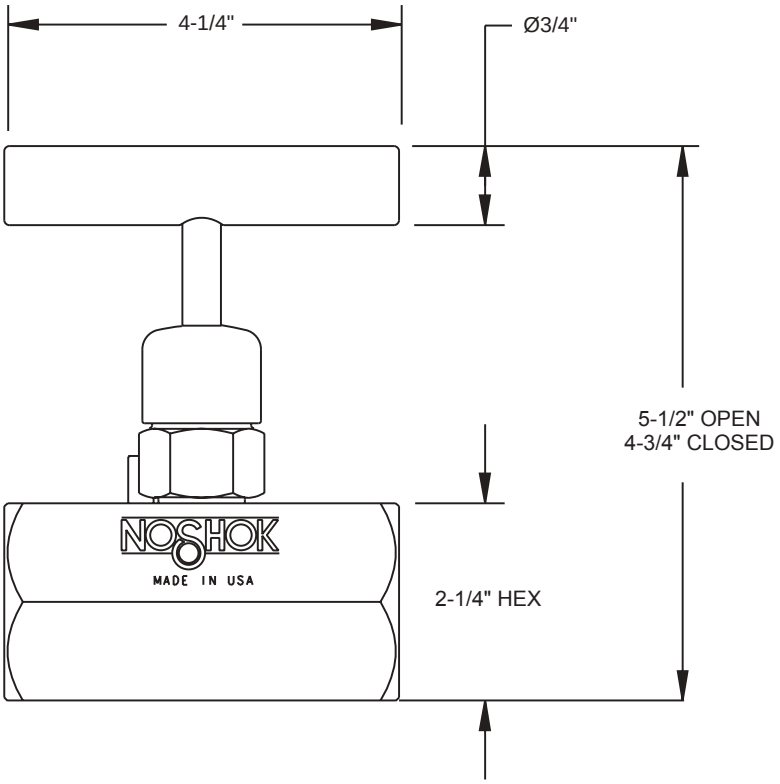

3/4" - 1-1/2" Male-Female

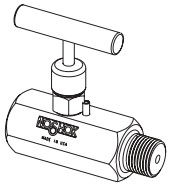

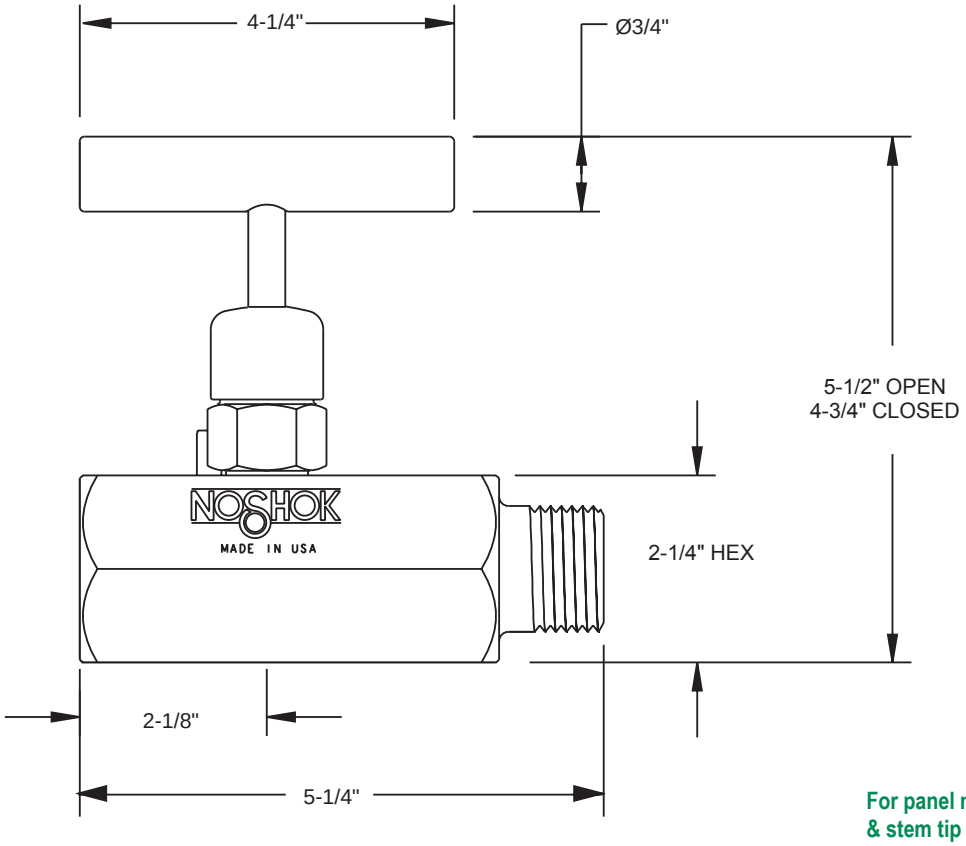

For panel mount, packing, & stem tip dimensions, see pgs. 64-67.

Standard, Hard Seat

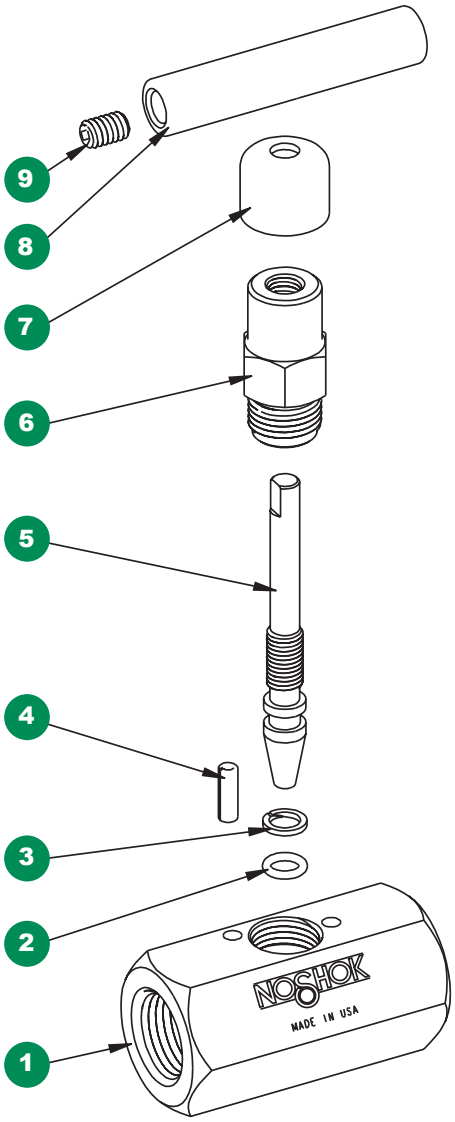

1 Valve body
2 FKM o-ring
3 PTFE back-up ring
4 Slotted spring pin
5 Valve stem
6 Valve bonnet
7 Dust cap
8 Valve “T” handle
9 Set screw

Option With Packing

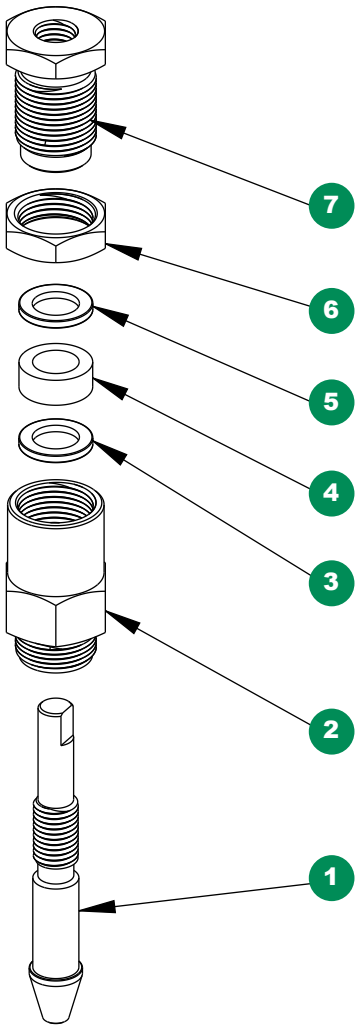

1 Valve packing stem
2 Valve packing bonnet
3 Packing washer
4 Packing
5 Packing washer
6 Jam nut
7 Packing adjustment screw

Standard, Soft Seat

500 SERIES



- 100% helium leak tested to 1 x 10^{-4} ml/s for performance and reliability
- Replaceable Acetal seat and straight through porting for bidirectional, high capacity flow and easy roddable cleaning
- Blow-out proof stem provides a secondary stem seal in the full open position
- FKM o-ring seal and PTFE back-up ring below the stem threads to protect from corrosion and galling; PTFE packing optional (certain NPT sizes only)
- All stem threads are rolled for strength and ease of operation
- One-piece bonnet with a metal-to-metal seal to the valve body below the bonnet threads
- Slotted spring pin to prevent accidental loosening
- Vinyl dust cap for bonnet and stem (non-packing)

SPECIFICATIONS	
Materials	Zinc-Nickel plated Steel, electropolished 316 Stainless Steel*
Connections	1/4", 3/8", 1/2", 3/4", 1", 1-1/4" & 1-1/2" NPT Male-female & Female-female configurations
Pressure rating	6,000 psi @ 200 °F
Orifice sizes	1/4" - 1/2" NPT: 0.187" 3/4" - 1-1/2" NPT: 0.438"
Flow coefficient	1/4" - 1/2" NPT: C_V 0.76 3/4" - 1-1/2" NPT: C_V 4.0
Stem seal & type	All 316 Stainless Steel stems with FKM o-ring and PTFE back-up ring below the threads, PTFE packing optional for 1/4", 3/8" & 1/2" NPT only
Options	Panel mountings, o-ring materials, handles, packings, regulating stem and stem tips
Weight	Approximately 1.3 lb. up to 1/2" Approximately 4.5 lb. Large Hex, Female-Female Approximately 6 lb. Large Hex, Male-Female

* All 316SS products meet the requirements of NACE MR0175/ISO 15156-3.

⚠ **WARNING:** This product can expose you to chemicals including Lead and Nickel, which are known to the State of California to cause cancer and birth defects or other reproductive harm. For more information go to www.P65Warnings.ca.gov

NOTE: All NOSHOK valve products conform to the MSS SP-99 instrument valves standards, and valves supplied with packing also conform to MSS SP-132 compression packing systems for instrument valves standard.

Adaptive Industrial Solutions | sales@adaptiveind.com | (877) 818-5009

SERIES	**5**	500 Series, soft seat					
CONNECTION SIZES	**02**	1/4" NPT	**04**	1/2" NPT	**08**	1" NPT	**12** 1-1/2" NPT
	03	3/8" NPT	**06**	3/4" NPT	**10**	1-1/4" NPT	**0402** 1/2" NPT male - 1/4" NPT female
VALVE TYPES	**MFC**	Male-Female, Steel			**MFS**	Male-Female, Stainless Steel	
	FFC	Female-Female, Steel			**FFS**	Female-Female, Stainless Steel	

Please consult your local NOSHOK Distributor or NOSHOK, Inc. for availability and delivery information.

EXAMPLE **504 – FFC**

Series.....500 soft seat
Connection size .....1/2" NPT
Valve type.....Female-female, Steel

To meet all of your specific application requirements, the following **additional options** are available for these needle valves. To order all or any of these options, simply add them to the part number as shown in the diagram below.

NOTE 1: The example shown includes ALL possible additional options. Please include ONLY the options required for your application when building your part number. (EXAMPLE: 504-FFC-HL5)

NOTE 2: When a packing option is selected, an o-ring option is NOT available.

ORDERING INFORMATION - ADDITIONAL OPTIONS							
SOFT SEATS	**PK1**	PEEK	**KF1**	PCTFE			
PACKING†	**P1**	PTFE					
STEM TIP	**T1**	Non-rotating (316 Stainless)					
O-RINGS*	**EM1**	EPDM	**KZ1**	FFKM (Perfluoroelastomer)	**NB1**	NBR	
PANEL MOUNTINGS	**PM1**	Panel mount (1 nut)	**PM2**	Panel mount (2 nuts)			
HANDLES	**HL4**	1-3/8" Phenolic	**HL5**	1-3/4" Phenolic	**HL9**	2-3/8" Phenolic**	

Please consult your local NOSHOK Distributor or NOSHOK, Inc. for availability and delivery information.

† For 1/4", 3/8" and 1/2" NPT only.
* Other o-ring materials available on request.
** For 3/4" NPT to 1-1/2" NPT only.

Please note that the standard o-ring in all the NOSHOK valves is FKM and the standard handles are “T” handles (HL2).

The handle material will always match the material of the valve, unless otherwise specified. For example, the “T” handle (HL2) on the 504-FFC will be Steel. When only the standard configuration is needed, no additional designations are necessary. Please consult the factory for special application requests.

EXAMPLE with Additional Options **504 – FFC – PK1 – T1 – KZ1 – PM2 – HL5**

Series.....500 soft seat
Connection size.....1/2" NPT
Valve type.....Female-female, Steel
Soft seat .....PEEK
Stem tip ..... Non-rotating
O-ring.....FFKM (Perfluoroelastomer)
Panel mount.....Panel mount (2 nuts)
Handle ..... 1-3/4" Phenolic

Dimensions

1/4" - 1/2" Male-Female

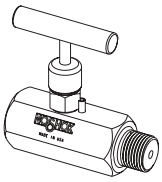

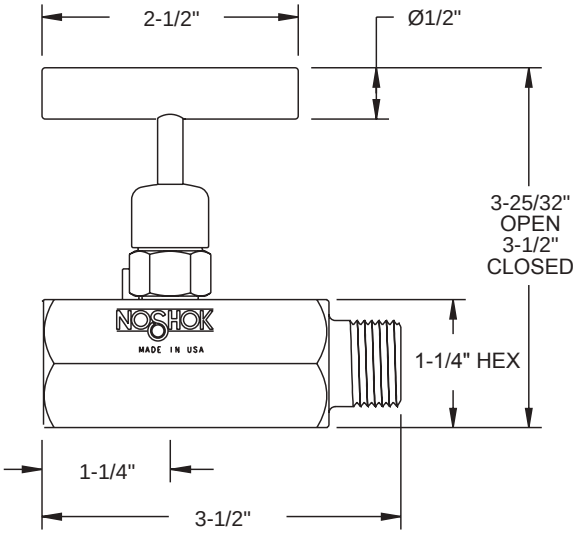

3/4" - 1-1/2" Male-Female

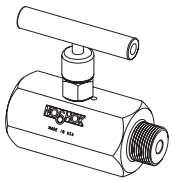

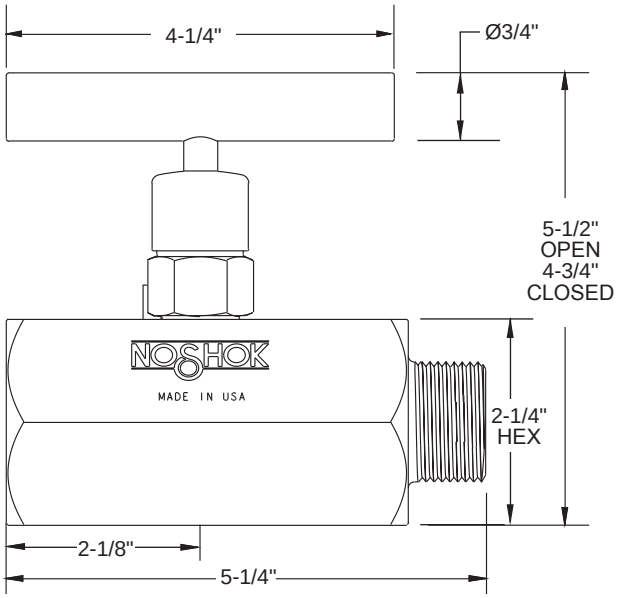

1/4" - 1/2" Female-Female

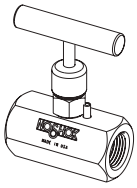

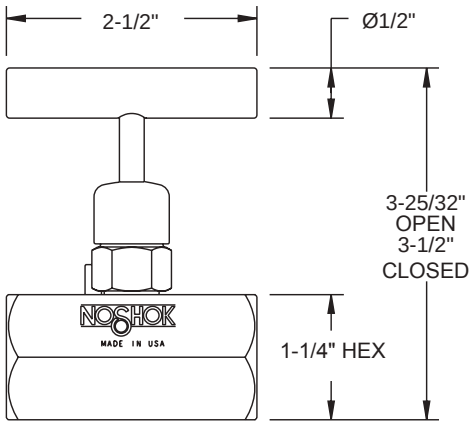

3/4" - 1-1/2" Female-Female

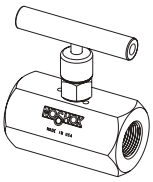

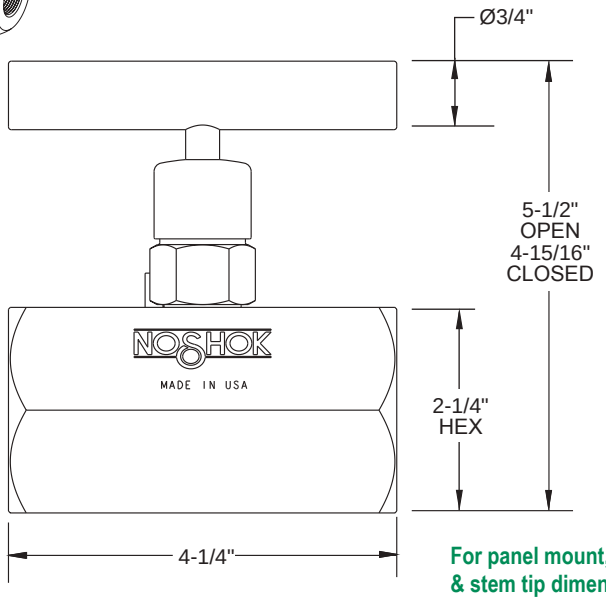

For panel mount, packing, & stem tip dimensions, see pgs. 64-67.

Standard, Soft Seat

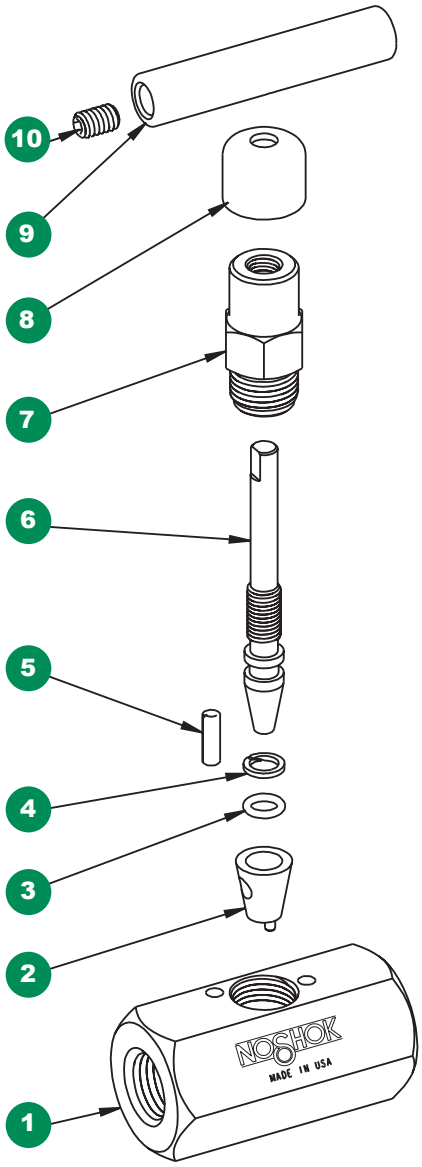

1 Valve body
2 Acetal seat
3 FKM o-ring
4 PTFE back-up ring
5 Slotted spring pin
6 Valve stem
7 Valve bonnet
8 Dust cap
9 Valve “T” handle
10 Set screw

Option With Packing

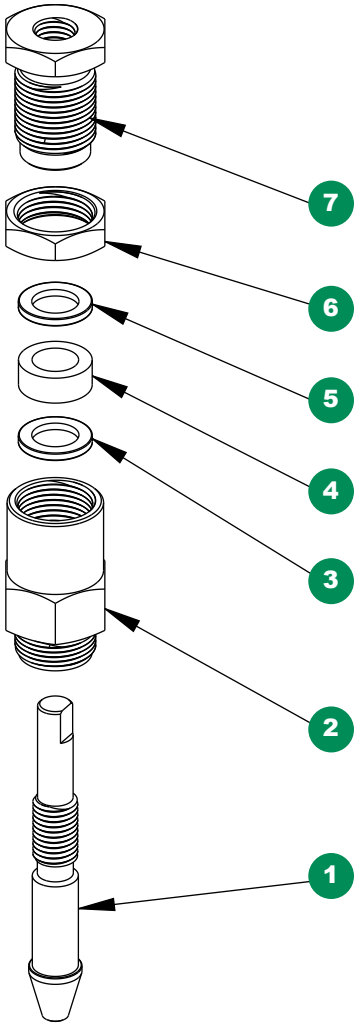

1 Valve packing stem
2 Valve packing bonnet
3 Packing washer
4 Packing
5 Packing washer
6 Jam nut
7 Packing adjustment screw

Block & Bleed, Hard Seat

600 SERIES



- Block & bleed design allows pressure to be bled off without disturbing the permanent piping installation, allowing quick and easy removal or replacement of instruments
- 100% helium leak tested to 1 x 10^{-4} ml/s for performance and reliability
- Blow-out proof stem provides a secondary stem seal in the full open position
- FKM o-ring seal and PTFE back-up ring below the stem threads to protect from corrosion and galling; PTFE or Graphite packing optional
- All stem threads are rolled for strength and ease of operation
- One-piece bonnet with a metal-to-metal seal to the valve body below the bonnet threads
- Slotted spring pin to prevent accidental loosening
- Vinyl dust cap for bonnet and stem (non-packing)
- 0.090" bleed hole located on the bottom is controlled by a 1/4"-20 UNF-2A bleed screw

SPECIFICATIONS	
Materials	Zinc-Nickel plated Steel, electropolished 316 Stainless Steel*
Connections	1/4" & 1/2" NPT Male-female & Female-female configurations
Pressure rating**	10,000 psi @ 200 °F
Orifice size	0.187"
Flow coefficient	C_V 0.44
Stem seal & type	All 316 Stainless Steel stems with FKM o-ring and PTFE back-up ring below the threads, PTFE or Graphite packing optional
Options	Panel mountings, o-ring materials, handles, packings, regulating stem and stem tips
Weight	Approximately 1.3 lb. up to 1/2" Approximately 4.5 lb. Large Hex, Female-Female Approximately 6 lb. Large Hex, Male-Female

* All 316SS products meet the requirements of NACE MR0175/ISO 15156-3.
** If a packing option is chosen, maximum pressure rating is 6,000 psi. Refer to the "Pressure vs. Temperature: Packing Style with Compatible Fluid" chart at the back of this catalog.

⚠ **WARNING:** This product can expose you to chemicals including Lead and Nickel, which are known to the State of California to cause cancer and birth defects or other reproductive harm. For more information go to www.P65Warnings.ca.gov

NOTE: All NOSHOK valve products conform to the MSS SP-99 instrument valves standards, and valves supplied with packing also conform to MSS SP-132 compression packing systems for instrument valves standard.

Adaptive Industrial Solutions | sales@adaptiveind.com | (877) 818-5009

SERIES	**6**	600 Series, hard seat			
CONNECTION SIZES	**02**	1/4" NPT	**04**	1/2" NPT	
VALVE TYPES	**MFC**	Male-Female, Steel	**MFS**	Male-Female, Stainless Steel	
	FFC	Female-Female, Steel	**FFS**	Female-Female, Stainless Steel	

Please consult your local NOSHOK Distributor or NOSHOK, Inc. for availability and delivery information.

EXAMPLE **602 – FFC**

Series.....600 hard seat
Connection size.....1/4" NPT
Valve type.....Female-female, Steel

To meet all of your specific application requirements, the following **additional options** are available for these needle valves. To order all or any of these options, simply add them to the part number as shown in the diagram below.

NOTE 1: The example shown includes ALL possible additional options. Please include ONLY the options required for your application when building your part number. (EXAMPLE: 602-FFC-P2)

NOTE 2: When a packing option is selected, an o-ring option is NOT available.

ORDERING INFORMATION - ADDITIONAL OPTIONS						
PACKINGS†	**P1**	PTFE	**P2**	Graphite		
STEM TIPS	**T1**	Non-rotating (316 Stainless)	**T6**	Ball (carbide)	**T8**	Ball (Monel)
	T5	Ball (440C Stainless)	**T7**	Ball (ceramic)	**T9**	Non-rotating regulating (316 Stainless)
O-RINGS*	**EM1**	EPDM	**KZ1**	FFKM (Perfluoroelastomer)	**NB1**	NBR
PANEL MOUNTINGS	**PM1**	Panel mount (1 nut)	**PM2**	Panel mount (2 nuts)		
HANDLES	**HL4**	1-3/8" Phenolic	**HL5**	1-3/4" Phenolic		

Please consult your local NOSHOK Distributor or NOSHOK, Inc. for availability and delivery information.

† If a packing option is chosen, maximum pressure rating is 6,000 psi. Refer to the "Pressure vs. Temperature: Packing Style with Compatible Fluid" chart at the back of this catalog.

* Other o-ring materials available on request.

Please note that the standard o-ring in all the NOSHOK valves is FKM and the standard handles are “T” handles (HL2).

The handle material will always match the material of the valve, unless otherwise specified. For example, the “T” handle (HL2) on the 602-FFC will be Steel. When only the standard configuration is needed, no additional designations are necessary. Please consult the factory for special application requests.

EXAMPLE with Additional Options **6 02 – FFC – P1 – T1 – PM2 – HL5**

Series.....600 hard seat
Connection size.....1/4" NPT
Valve type.....Female-female, Steel
Packing.....PTFE
Stem tip.....Non-rotating
Panel mount.....Panel mount (2 nuts)
Handle.....1-3/4" Phenolic

Dimensions

Male-Female

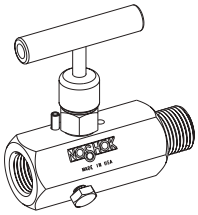

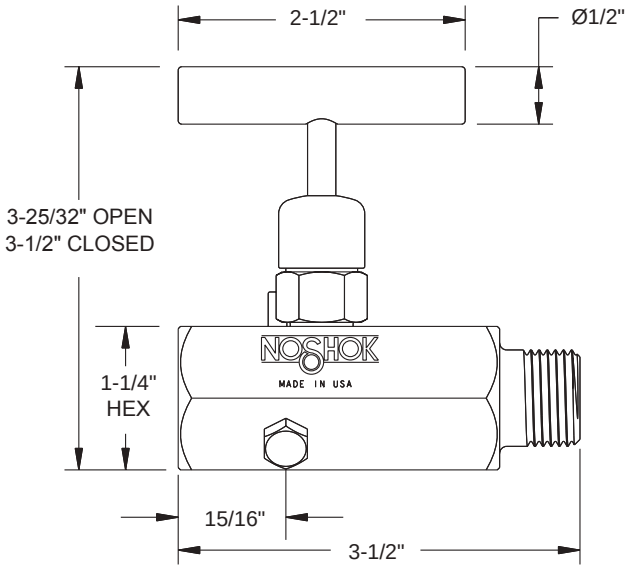

Female-Female

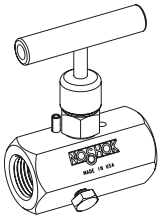

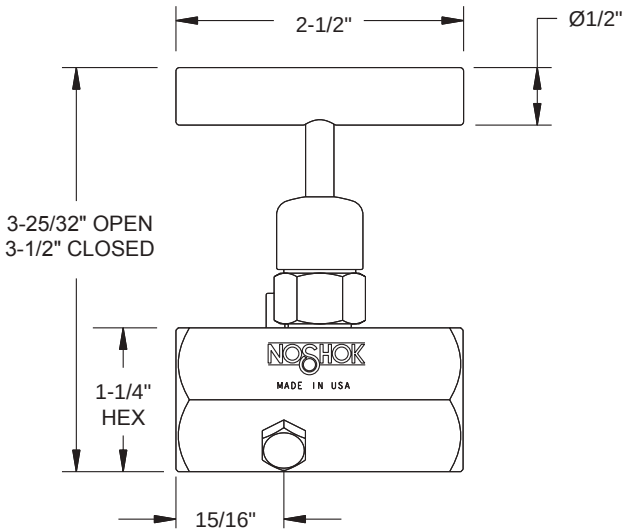

For panel mount, packing, & stem tip dimensions, see pgs. 64-67.

Block & Bleed, Hard Seat

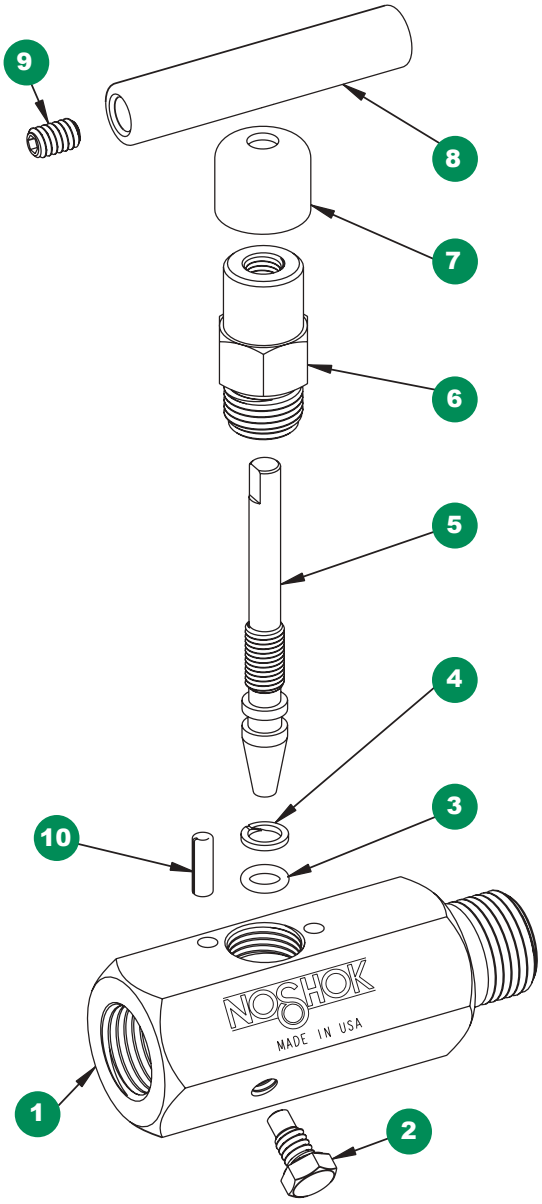

1 Valve body
2 Bleed screw
3 FKM o-ring
4 PTFE back-up ring
5 Valve stem
6 Valve bonnet
7 Dust cap
8 Valve “T” handle
9 Set screw
10 Slotted spring pin

Option With Packing

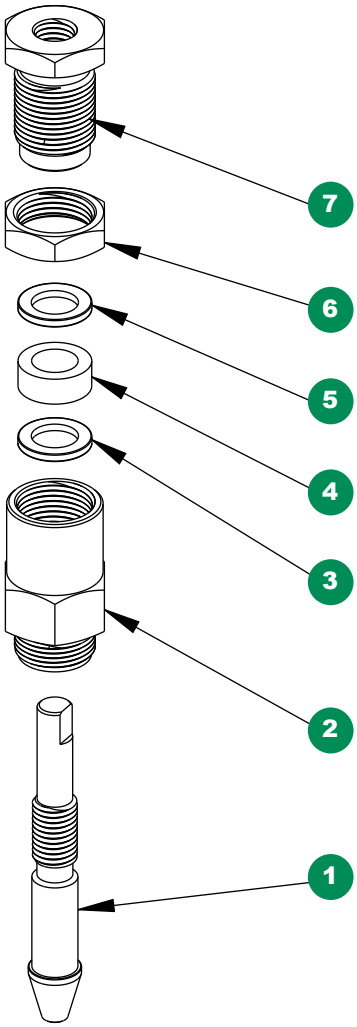

1 Valve packing stem
2 Valve packing bonnet
3 Packing washer
4 Packing
5 Packing washer
6 Jam nut
7 Packing adjustment screw

Block & Bleed, Soft Seat

700 SERIES



- Block & bleed design allows pressure to be bled off without disturbing the permanent piping installation, allowing quick and easy removal or replacement of instruments
- 100% helium leak tested to 1 x 10^{-4} ml/s for performance and reliability
- Replaceable Acetal seat and straight through porting for bidirectional, high capacity flow and easy roddable cleaning
- PCTFE or PEEK soft seat optional
- Blow-out proof stem provides a secondary stem seal in the full open position
- FKM o-ring seal and PTFE back-up ring below the stem threads to protect from corrosion and galling; PTFE packing optional
- All stem threads are rolled for strength and ease of operation
- One-piece bonnet with a metal-to-metal seal to the valve body below the bonnet threads
- Slotted spring pin to prevent accidental loosening
- Vinyl dust cap for bonnet and stem (non-packing)
- 0.090" bleed hole located on the bottom is controlled by a 1/4"-20 UNF-2A bleed screw

SPECIFICATIONS	
Materials	Zinc-Nickel plated Steel, electropolished 316 Stainless Steel*
Connections	1/4" & 1/2" NPT Male-female & Female-female configurations
Pressure rating	6,000 psi @ 200 °F
Orifice size	0.187"
Flow coefficient	C_V 0.76
Stem seal & type	All 316 Stainless Steel stems with FKM o-ring and PTFE back-up ring below the threads, PTFE packing optional
Options	Panel mountings, o-ring materials, handles, packings, regulating stem and stem tips
Weight	Approximately 1.3 lb. up to 1/2" Approximately 4.5 lb. Large Hex, Female-Female Approximately 6 lb. Large Hex, Male-Female

* All 316SS products meet the requirements of NACE MR0175/ISO 15156-3.

⚠ **WARNING:** This product can expose you to chemicals including Lead and Nickel, which are known to the State of California to cause cancer and birth defects or other reproductive harm. For more information go to www.P65Warnings.ca.gov

NOTE: All NOSHOK valve products conform to the MSS SP-99 instrument valves standards, and valves supplied with packing also conform to MSS SP-132 compression packing systems for instrument valves standard.

Adaptive Industrial Solutions | sales@adaptiveind.com | (877) 818-5009

SERIES	**7**	700 Series, soft seat			
CONNECTION SIZES	**02**	1/4" NPT	**04**	1/2" NPT	
VALVE TYPES	**MFC**	Male-Female, Steel		**MFS**	Male-Female, Stainless Steel
	FFC	Female-Female, Steel		**FFS**	Female-Female, Stainless Steel

Please consult your local NOSHOK Distributor or NOSHOK, Inc. for availability and delivery information.

EXAMPLE **702 – FFC**

Series.....700 soft seat
Connection size..... 1/4" NPT
Valve type..... Female-female, Steel

To meet all of your specific application requirements, the following **additional options** are available for these needle valves. To order all or any of these options, simply add them to the part number as shown in the diagram below.

NOTE 1: The example shown includes ALL possible additional options. Please include ONLY the options required for your application when building your part number. (EXAMPLE: 702-FFC-HL5)

NOTE 2: When a packing option is selected, an o-ring option is NOT available.

ORDERING INFORMATION - ADDITIONAL OPTIONS						
SOFT SEATS	**PK1**	PEEK	**KF1**	PCTFE		
PACKING†	**P1**	PTFE				
STEM TIP	**T1**	Non-rotating (316 Stainless)				
O-RINGS*	**EM1**	EPDM	**KZ1**	FFKM (Perfluoroelastomer)	**NB1**	NBR
PANEL MOUNTINGS	**PM1**	Panel mount (1 nut)	**PM2**	Panel mount (2 nuts)		
HANDLES	**HL4**	1-3/8" Phenolic	**HL5**	1-3/4" Phenolic		

Please consult your local NOSHOK Distributor or NOSHOK, Inc. for availability and delivery information.

* Other o-ring materials available on request.

Please note that the standard o-ring in all the NOSHOK valves is FKM and the standard handles are “T” handles (HL2).

The handle material will always match the material of the valve, unless otherwise specified. For example, the “T” handle (HL2) on the 702-FFC will be Steel. When only the standard configuration is needed, no additional designations are necessary. Please consult the factory for special application requests.

EXAMPLE with Additional Options **7 02 – FFC – PK1 – T1 – EM1 – PM2 – HL5**

Series.....700 soft seat
Connection size..... 1/4" NPT
Valve type.....Female-female, Steel
Soft seat ..... PEEK
Stem tip .....Non-rotating
O-ring..... EPDM
Panel mount..... Panel mount (2 nuts)
Handle .....1-3/4" Phenolic

Dimensions

Male-Female

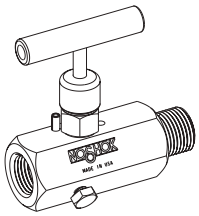

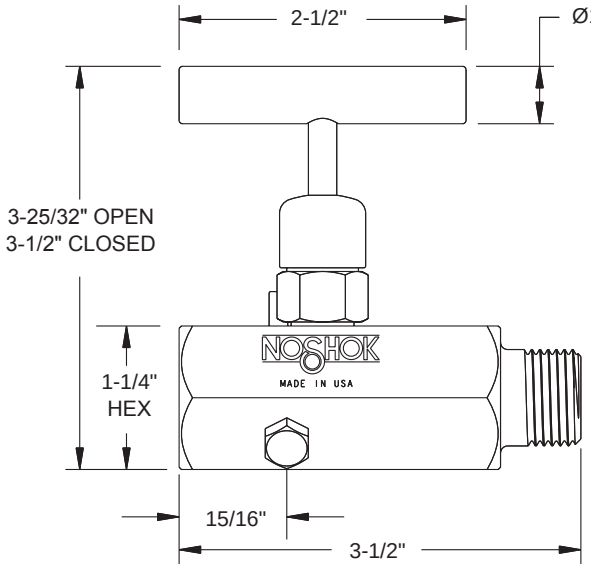

Female-Female

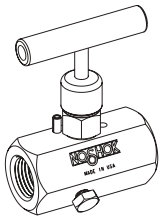

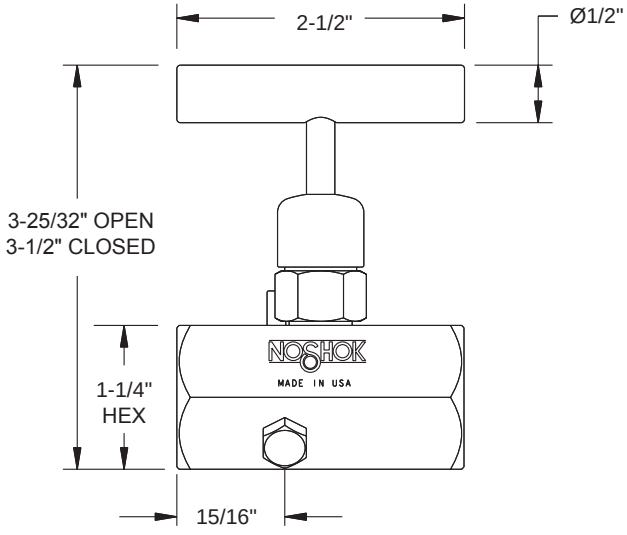

For panel mount, packing, & stem tip dimensions, see pgs. 64-67.

Block & Bleed, Soft Seat

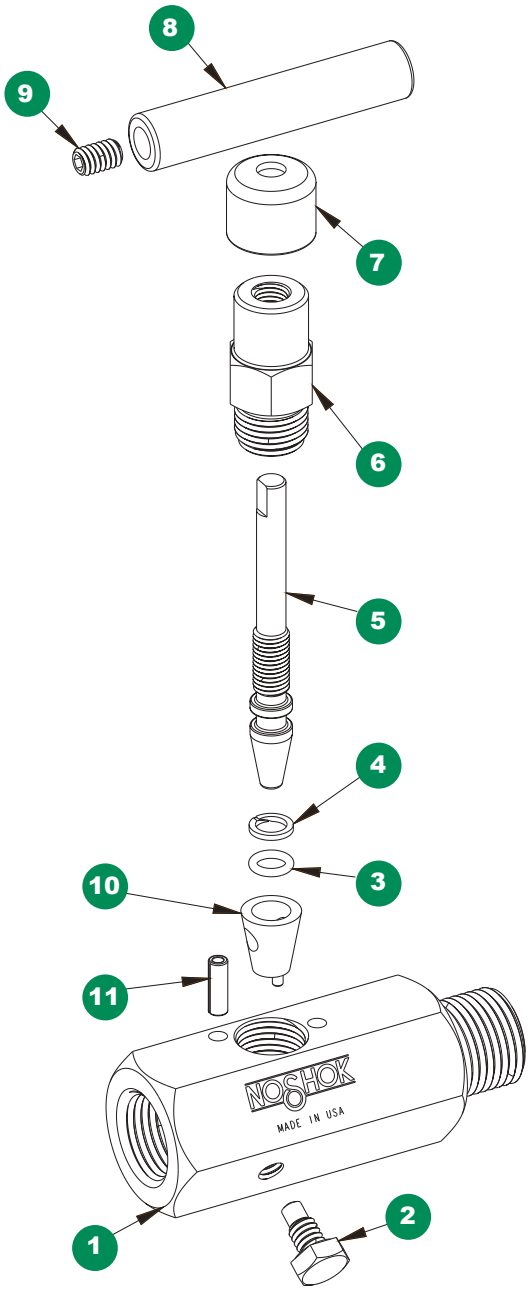

1 Valve body
2 Bleed screw
3 FKM o-ring
4 PTFE back-up ring
5 Valve stem
6 Valve bonnet
7 Dust cap
8 Valve “T” handle
9 Set screw
10 Acetal seat
11 Slotted spring pin

Option With Packing

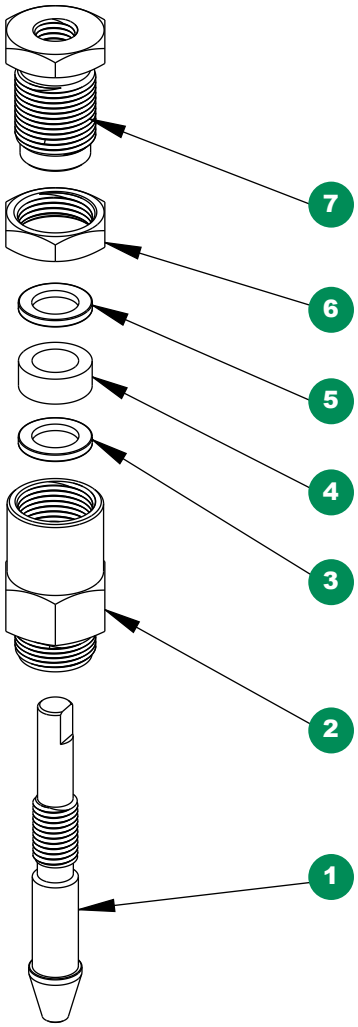

1 Valve packing stem
2 Valve packing bonnet
3 Packing washer
4 Packing
5 Packing washer
6 Jam nut
7 Packing adjustment screw

Bleed, Hard Seat & Soft Tip



800/850 SERIES

- Bleed valves provide a convenient means to relieve process pressures trapped between a shut off valve and the instrument
- Uses the same bonnet assemblies of the 100/150 Series mini valves with an integrated single threaded body for insertion in vent port
- Soft tip valves feature a patented Acetal non-rotating soft tip stem, and a back-up metal-to-metal seal **(U.S. Patent 6,820,857)**
- 100% helium leak tested to 1 x 10^{-4} ml/s for performance and reliability
- Available in Zinc-Nickel plated Steel, electropolished Stainless Steel, and Brass
- FKM o-ring seal and PTFE back-up ring below the stem threads to protect from corrosion and galling; PTFE or Graphite (800 Series only) packing optional
- All stem threads are rolled for strength and ease of operation
- 0.159" bleed port
- Patented body-to-bonnet, metal-to-metal seal is designed to significantly increase the pressure range of the valve **(U.S. Patent 7,758,014)**

SPECIFICATIONS	
Materials	Zinc-Nickel plated Steel, electropolished 316 Stainless Steel*, 360 Brass
Connections	1/4" & 1/2" NPT
Hard seat pressure ratings**	Brass: 6,000 psi @ 200 °F Steel: 10,000 psi @ 200 °F Stainless Steel: 10,000 psi @ 200 °F
Soft tip pressure ratings	Brass: 6,000 psi @ 200 °F Steel: 6,000 psi @ 200 °F Stainless Steel: 6,000 psi @ 200 °F
Bleed port	0.159"
Stem seal & type	All 316 Stainless Steel stems with FKM o-ring and PTFE back-up ring below the threads, PTFE or Graphite (800 Series only) packing optional
Options	Panel mountings, o-ring materials, handles, packings, regulating stem and stem tips
Weight	Approximately 0.4 lb.

* All 316SS products meet the requirements of NACE MR0175/ISO 15156-3.
** If a packing option is chosen, maximum pressure rating is 6,000 psi. Refer to the "Pressure vs. Temperature: Packing Style with Compatible Fluid" chart at the back of this catalog.

⚠ **WARNING:** This product can expose you to chemicals including Lead and Nickel, which are known to the State of California to cause cancer and birth defects or other reproductive harm. For more information go to www.P65Warnings.ca.gov

NOTE: All NOSHOK valve products conform to the MSS SP-99 instrument valves standards, and valves supplied with packing also conform to MSS SP-132 compression packing systems for instrument valves standard.

Adaptive Industrial Solutions | sales@adaptiveind.com | (877) 818-5009

ORDERING INFORMATION						
SERIES	8	800/850 Series, hard seat/soft tip				
CONNECTION SIZES	02	Hard seat 1/4" NPT			52	Acetal soft tip 1/4" NPT
	04	Hard seat 1/2" NPT			54	Acetal soft tip 1/2" NPT
VALVE TYPES	MC	Male, Steel	MS	Male, Stainless Steel	MB	Male, Brass

Please consult your local NOSHOK Distributor or NOSHOK, Inc. for availability and delivery information.

EXAMPLE **8 02 – MC**

Series.....800/850 hard seat/soft tip
Connection size..... Hard seat 1/4" NPT
Valve type.....Male, Steel

To meet all of your specific application requirements, the following **additional options** are available for these needle valves. To order all or any of these options, simply add them to the part number as shown in the diagram below.

NOTE 1: The example shown includes ALL possible additional options. Please include ONLY the options required for your application when building your part number. (EXAMPLE: 802-MC-EM1)

NOTE 2: When a packing option is selected, an o-ring option is NOT available.

ORDERING INFORMATION - ADDITIONAL OPTIONS						
PACKINGS†	P1	PTFE	P2	Graphite		
STEM TIPS	T1	Non-rotating (316 Stainless)	T5	Ball (440C Stainless)**	T8	Ball (Monel)**
	T3	PCTFE***	T6	Ball (carbide)**		
	T4	PEEK***	T7	Ball (ceramic)**		
O-RINGS*	EM1	EPDM	KZ1	FFKM (Perfluoroelastomer)	NB1	NBR
HANDLES	HL2	2-1/2" "T"**	HL4	1-3/8" Phenolic**		
	HL3	1" Round knurled	HL5	1-3/4" Phenolic**		

Please consult your local NOSHOK Distributor or NOSHOK, Inc. for availability and delivery information.

† If a packing option is chosen, maximum pressure rating is 6,000 psi. Refer to the "Pressure vs. Temperature: Packing Style with Compatible Fluid" chart at the back of this catalog.
* Other o-ring materials available on request.
** For 800 Series only.
*** For 850 Series only.

Please note that the standard o-ring in all the NOSHOK valves is FKM and the standard handles are 1" round knurled handles (HL3) on Brass, and 1-3/8" mini "T" handles (HL7) on Stainless Steel and Steel.

The handle material will always match the material of the valve, unless otherwise specified. For example, the mini "T" handle (HL7) on the 802-MC will be Steel. When only the standard configuration is needed, no additional designations are necessary. Please consult the factory for special application requests.

EXAMPLE with Additional Options **8 02 – MC – P1 – T1 – HL5**

Series..... 800/850 hard seat/soft tip
Connection size.....Hard seat 1/4" NPT
Valve type.....Male, Steel
Packing.....PTFE
Stem tip ..... Non-rotating
Handle .....1-3/4" Phenolic

Dimensions

1/4" Bleed Valve

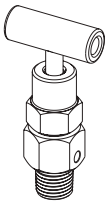

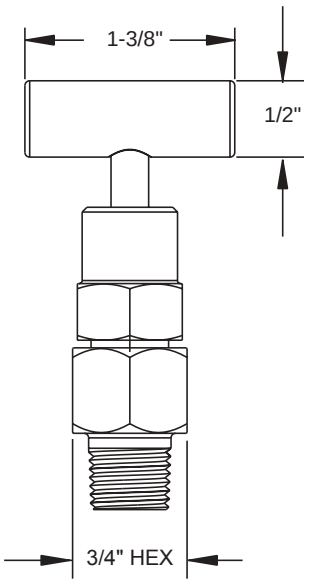

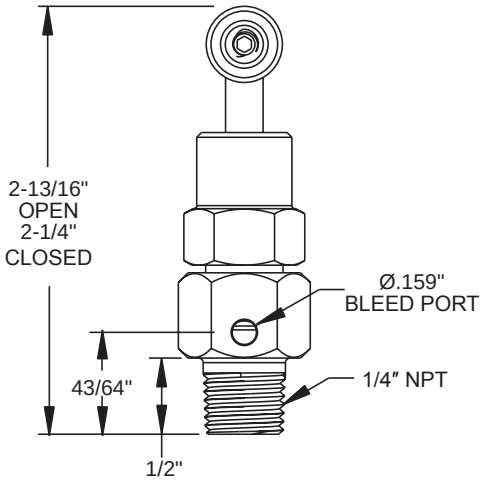

1/2" Bleed Valve

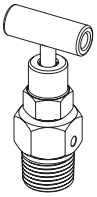

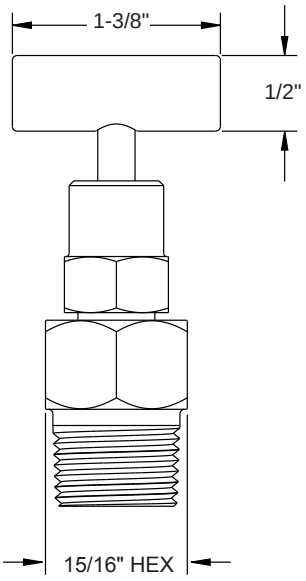

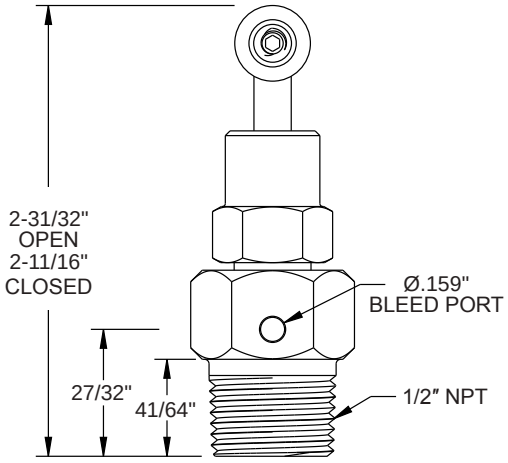

For panel mount, packing, & stem tip dimensions, see pgs. 64-67.

Bleed, Hard Seat

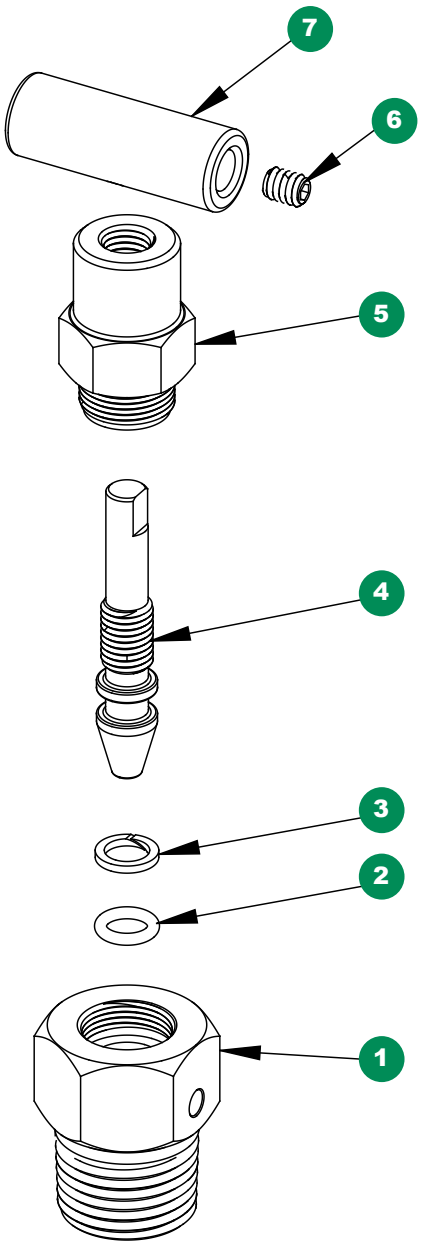

1 Valve body
2 FKM o-ring
3 PTFE back-up ring
4 Mini valve stem
5 Mini valve bonnet
6 Set screw
7 Mini “T” handle

Option With Packing, Hard Seat

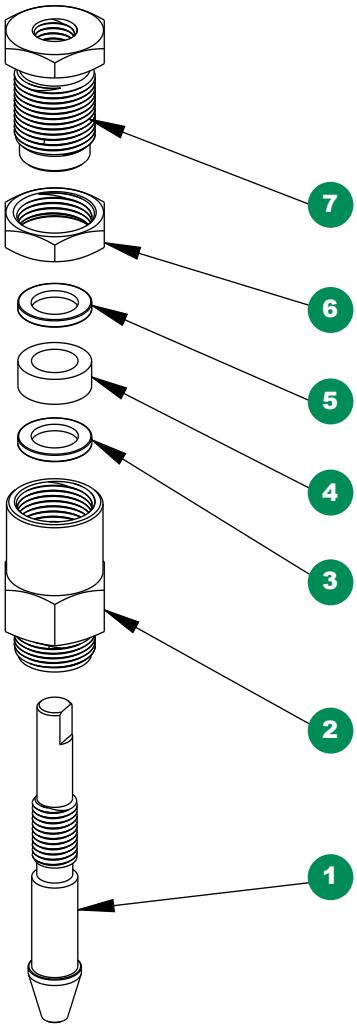

1 Mini valve packing stem
2 Mini valve packing bonnet
3 Packing washer
4 Packing
5 Packing washer
6 Jam nut
7 Packing adjustment screw

Option With Packing, Soft Tip

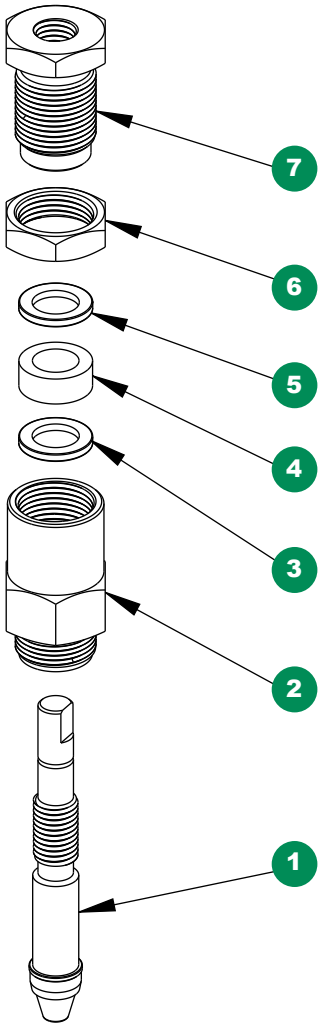

1 Soft tip packing stem
2 Mini valve packing bonnet
3 Packing washer
4 Packing
5 Packing washer
6 Jam nut
7 Packing adjustment screw

Block & Bleed, Hard Seat

2070 SERIES



- Combines isolating and venting in a single valve, eliminating the need for tubing and fittings
- Block valve isolates the downstream process fluids, and the bleed valve exhausts upstream fluids enabling instruments to be removed without disturbing the permanent piping installation
- The 1/4" NPT vent plug is located 90° to the left and may be removed and replaced with exhaust piping to direct the fluids to a safe location
- 100% helium leak tested to 1 x 10^{-4} ml/s for performance and reliability
- Blow-out proof stem provides a secondary stem seal in the full open position
- FKM o-ring seal and PTFE back-up ring below the stem threads to protect from corrosion and galling; PTFE or Graphite packing optional
- All stem threads are rolled for strength and ease of operation
- One-piece bonnet with a metal-to-metal seal to the valve body below the bonnet threads
- Slotted spring pin to prevent accidental loosening
- Vinyl dust cap for bonnet and stem (non-packing)

Flow Schematic

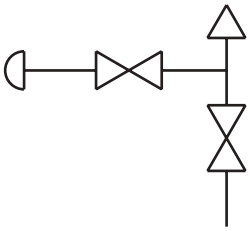

SPECIFICATIONS	
Materials	Zinc-Nickel plated Steel, electropolished 316 Stainless Steel*
Connection	1/2" & 1/4" NPT Male-female & Female-female configurations available, right venting optional
Pressure rating**	10,000 psi @ 200 °F
Orifice size	0.187"
Flow coefficient	C_V 0.44
Stem seal & type	All 316 Stainless Steel stems with FKM o-ring and PTFE back-up ring below the threads, PTFE or Graphite packing optional
Length	4" standard and 5-3/8" extended length available
Options	Panel mountings, o-ring materials, handles, packings, regulating stem and stem tips
Weight	Approximately 2.0 lb., extended model 2.7 lb.

* All 316SS products meet the requirements of NACE MR0175/ISO 15156-3.
** If a packing option is chosen, maximum pressure rating is 6,000 psi. Refer to the "Pressure vs. Temperature: Packing Style with Compatible Fluid" chart at the back of this catalog.

⚠ **WARNING:** This product can expose you to chemicals including Lead and Nickel, which are known to the State of California to cause cancer and birth defects or other reproductive harm. For more information go to www.P65Warnings.ca.gov

NOTE: All NOSHOK valve products conform to the MSS SP-99 instrument valves standards, and valves supplied with packing also conform to MSS SP-132 compression packing systems for instrument valves standard.

ORDERING INFORMATION						
SERIES	2	2-valve				
SEAT	0	Hard seat				
PROCESS TYPE	7	Block & bleed				
CONNECTION SIZES	0	1/2" NPT	2	1/4" NPT	0604	3/4" NPT male - 1/2" NPT male or female
VALVE TYPES	MFC	Male-Female, Steel	EMFS	Extended Male-Female, Stainless Steel	FFCR	Female-Female, Steel, Right Vent
	MFCR	Male-Female, Steel, Right Vent	FMC	Female-Male, Steel	EFFC	Extended Female-Female, Steel
	EMFC	Extended Male-Female, Steel	EFMC	Extended Female-Male, Steel	FFS	Female-Female, Stainless Steel
	MFS	Male-Female, Stainless Steel	FMS	Female-Male, Stainless Steel	FFSR	Female-Female, Stainless Steel, Right Vent
	MMS	Male-Male, Stainless Steel	EFMS	Extended Female-Male, Stainless Steel	EFFS	Extended Female-Female, Stainless Steel
	MFSR	Male-Female, Stainless Steel, Right Vent	FFC	Female-Female, Steel		

Please consult your local NOSHOK Distributor or NOSHOK, Inc. for availability and delivery information.

EXAMPLE **2 0 7 0 – FFC**

Series.....2-valve
Seat.....Hard seat
Process connection..... Block & bleed
Connection size.....1/2" NPT
Valve type..... Female-female, Steel

To meet all of your specific application requirements, the following **additional options** are available for these needle valves. To order all or any of these options, simply add them to the part number as shown in the diagram below.

NOTE 1: The example shown includes ALL possible additional options. Please include ONLY the options required for your application when building your part number. (EXAMPLE: 2070-FFC-HL5)

NOTE 2: When a packing option is selected, an o-ring option is NOT available.

ORDERING INFORMATION - ADDITIONAL OPTIONS						
PACKINGS†	P1	PTFE	P2	Graphite		
STEM TIPS	T1	Non-rotating (316 Stainless)	T6	Ball (carbide)	T8	Ball (Monel)
	T5	Ball (440C Stainless)	T7	Ball (ceramic)	T9	Non-rotating regulating (316 Stainless)
O-RINGS*	EM1	EPDM	KZ1	FFKM (Perfluoroelastomer)	NB1	NBR
HANDLES	HL1	1-13/16" Mini "T"	HL3	1" Round knurled	HL5	1-3/4" Phenolic
	HL2	2-1/2" "T"	HL4	1-3/8" Phenolic		

Please consult your local NOSHOK Distributor or NOSHOK, Inc. for availability and delivery information.

† If a packing option is chosen, maximum pressure rating is 6,000 psi. Refer to the "Pressure vs. Temperature: Packing Style with Compatible Fluid" chart at the back of this catalog.

* Other o-ring materials available on request.

Please note that the standard o-ring in all the NOSHOK valves is FKM and the standard handles are block "T" handles (HL2) and bleed mini "T" handles (HL1).

The handle material will always match the material of the valve, unless otherwise specified. For example, the "T" handle (HL2) on the 2070-FFC will be Steel. When only the standard configuration is needed, no additional designations are necessary. Please consult the factory for special application requests.

EXAMPLE with Additional Options **2 0 7 0 – FFC – P1 – T1 – HL3**

Series.....2-valve
Seat.....Hard seat
Process connection..... Block & bleed
Connection size.....1/2" NPT
Valve type..... Female-female, Steel
Packing.....PTFE
Stem tip..... Non-rotating
Handle..... 1" Round knurled

Dimensions

Male-Female

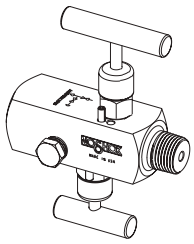

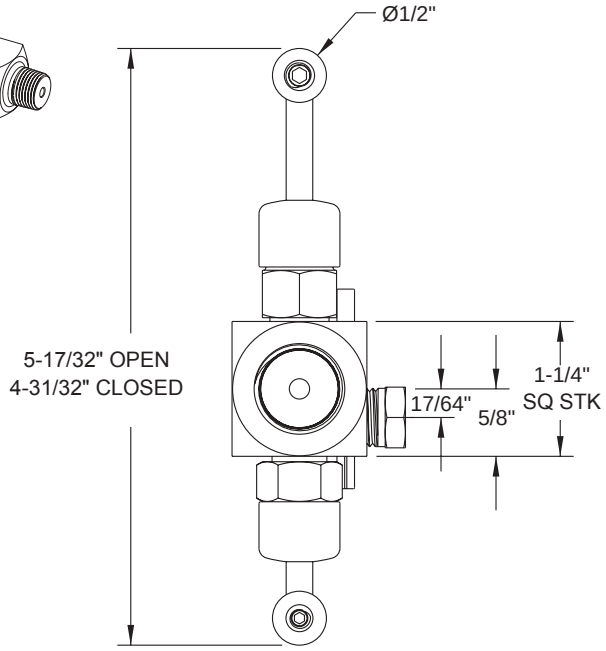

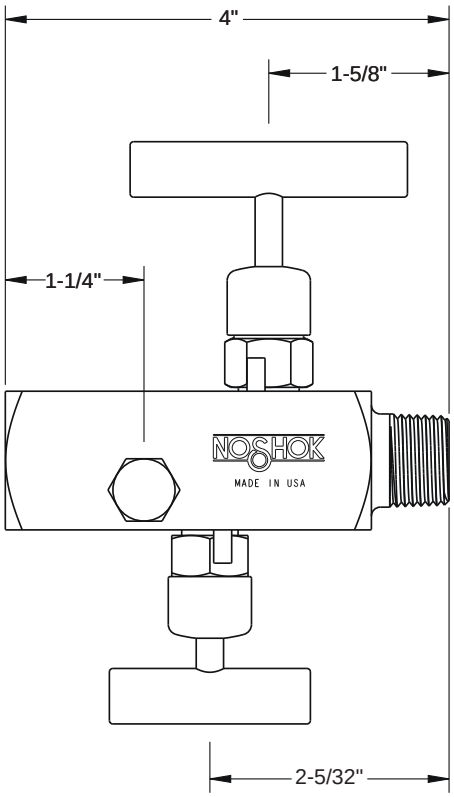

Extended Male-Female

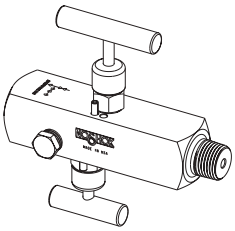

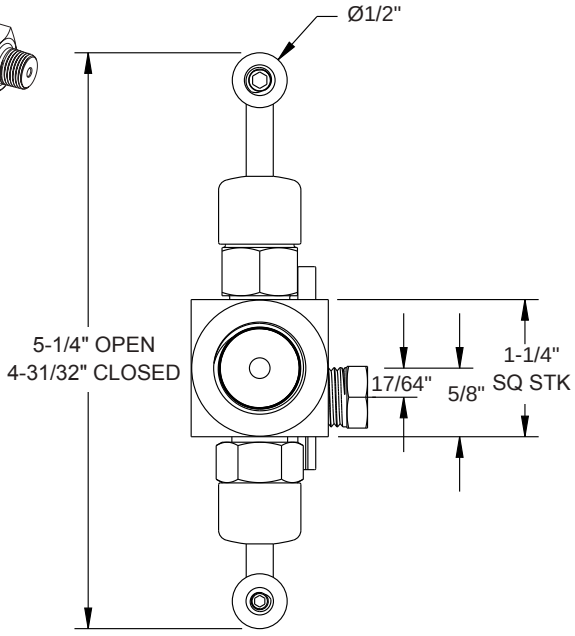

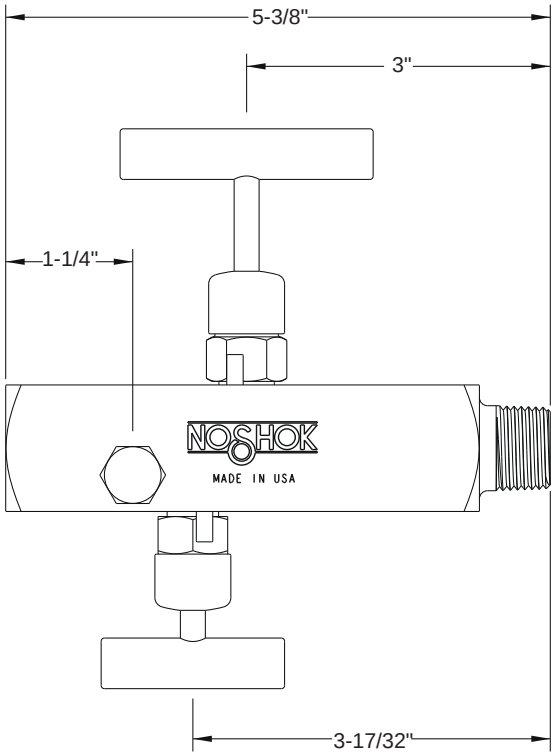

For panel mount, packing, & stem tip dimensions, see pgs. 64-67.

Block & Bleed, Hard Seat

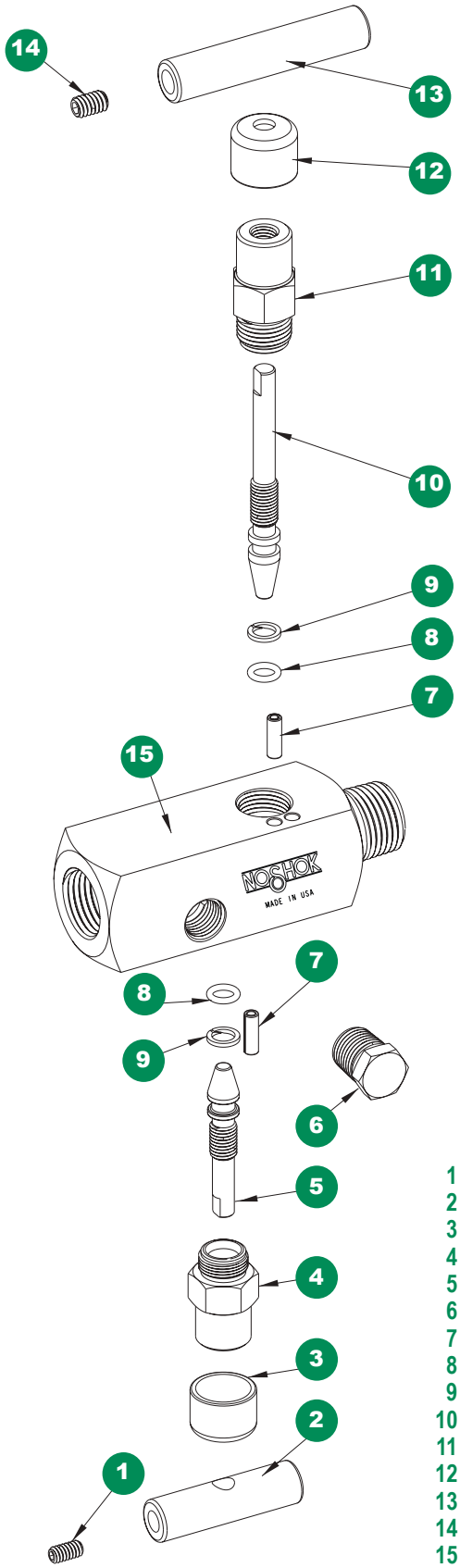

1 Set screw
2 Mini valve “T” handle
3 Red dust cap
4 Mini valve bonnet
5 Mini valve stem
6 Plug
7 Slotted spring pin
8 FKM o-ring
9 PTFE back-up ring
10 Valve stem
11 Valve bonnet
12 Blue dust cap
13 Valve “T” handle
14 Set screw
15 Block and bleed valve body

Option With Packing

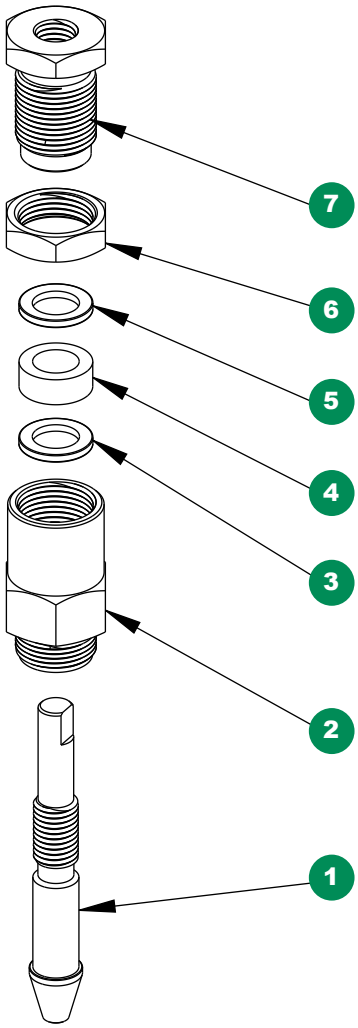

1 Mini valve packing stem and valve packing stem
2 Mini valve packing bonnet and valve packing bonnet
3 Packing washer
4 Packing
5 Packing washer
6 Jam nut
7 Packing adjustment screw

Block & Bleed, Soft Seat

2170 SERIES



- Combines isolating and venting in a single valve, eliminating the need for tubing and fittings
- Block valve isolates the downstream process fluids and the bleed valve exhausts upstream fluids enabling instruments to be removed without disturbing the permanent piping installation
- The 1/4" NPT vent plug is located 90° to the left and may be removed and replaced with exhaust piping to direct the fluids to a safe location
- 100% helium leak tested to 1 x 10^{-4} ml/s for performance and reliability
- Replaceable Acetal seat, and straight through porting for bidirectional, high capacity flow and easy roddable cleaning
- PCTFE or PEEK soft seat optional
- Blow-out proof stem provides a secondary stem seal in the full open position
- FKM o-ring seal and PTFE back-up ring below the stem threads to protect from corrosion and galling; PTFE packing optional
- All stem threads are rolled for strength and ease of operation
- One-piece bonnet with a metal-to-metal seal to the valve body below the bonnet threads
- Slotted spring pin to prevent accidental loosening
- Vinyl dust cap for bonnet and stem (non-packing)

Flow Schematic

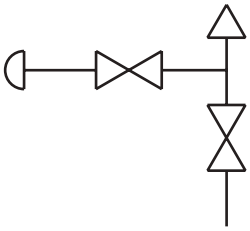

SPECIFICATIONS	
Materials	Zinc-Nickel plated Steel, electropolished 316 Stainless Steel*
Connection	1/2" & 1/4" NPT Male-female & Female-female configurations available, right venting optional
Pressure rating	6,000 psi @ 200 °F
Orifice size	0.187"
Flow coefficient	C_V 0.76
Stem seal & type	All 316 Stainless Steel stems with FKM o-ring and PTFE back-up ring below the threads, PTFE packing optional
Length	4" standard and 5-3/8" extended length available
Options	Panel mountings, o-ring materials, handles, packings, regulating stem and stem tips
Weight	Approximately 2.0 lb., extended model 2.7 lb.

* All 316SS products meet the requirements of NACE MR0175/ISO 15156-3.

⚠ **WARNING:** This product can expose you to chemicals including Lead and Nickel, which are known to the State of California to cause cancer and birth defects or other reproductive harm. For more information go to www.P65Warnings.ca.gov

NOTE: All NOSHOK valve products conform to the MSS SP-99 instrument valves standards, and valves supplied with packing also conform to MSS SP-132 compression packing systems for instrument valves standard.

Adaptive Industrial Solutions | sales@adaptiveind.com | (877) 818-5009

ORDERING INFORMATION						
SERIES	2	2-valve				
SEAT	1	Soft seat				
PROCESS TYPE	7	Block & bleed				
CONNECTION SIZES	0	1/2" NPT	2	1/4" NPT	0604	3/4" NPT male - 1/2" NPT male or female
VALVE TYPES	MFC	Male-Female, Steel	EMFS	Extended Male-Female, Stainless Steel	FFCR	Female-Female, Steel, Right Vent
	MFCR	Male-Female, Steel, Right Vent	FMC	Female-Male, Steel	EFFC	Extended Female-Female, Steel
	EMFC	Extended Male-Female, Steel	EFMC	Extended Female-Male, Steel	FFS	Female-Female, Stainless Steel
	MFS	Male-Female, Stainless Steel	FMS	Female-Male, Stainless Steel	FFSR	Female-Female, Stainless Steel, Right Vent
	MMS	Male-Male, Stainless Steel	EFMS	Extended Female-Male, Stainless Steel	EFFS	Extended Female-Female, Stainless Steel
	MFSR	Male-Female, Stainless Steel, Right Vent	FFC	Female-Female, Steel		

Please consult your local NOSHOK Distributor or NOSHOK, Inc. for availability and delivery information.

EXAMPLE **2 1 7 0 – FFC**

Series..... 2-valve
Seat.....Soft seat
Process connection .....Block & bleed
Connection size..... 1/2" NPT
Valve type.....Female-female, Steel

To meet all of your specific application requirements, the following **additional options** are available for these needle valves. To order all or any of these options, simply add them to the part number as shown in the diagram below.

NOTE 1: The example shown includes ALL possible additional options. Please include ONLY the options required for your application when building your part number. (EXAMPLE: 2170-FFC-PK1)

NOTE 2: When a packing option is selected, an o-ring option is NOT available.

ORDERING INFORMATION - ADDITIONAL OPTIONS						
SOFT SEATS	PK1	PEEK	KF1	PCTFE		
PACKING	P1	PTFE				
STEM TIP	T1	Non-rotating (316 Stainless, Isolation Valve Only)				
O-RINGS*	EM1	EPDM	KZ1	FFKM (Perfluoroelastomer)	NB1	NBR
HANDLES	HL1	1-13/16" Mini "T"	HL3	1" Round knurled	HL5	1-3/4" Phenolic
	HL2	2-1/2" "T"	HL4	1-3/8" Phenolic		

Please consult your local NOSHOK Distributor or NOSHOK, Inc. for availability and delivery information.

* Other o-ring materials available on request.

Please note that the standard o-ring in all the NOSHOK valves is FKM and the standard handles are block "T" handles (HL2) and bleed 1-3/8" mini "T" handle (HL7).

The handle material will always match the material of the valve, unless otherwise specified. For example, the "T" handle (HL2) on the 2170-FFC will be Steel. When only the standard configuration is needed, no additional designations are necessary. Please consult the factory for special application requests.

EXAMPLE with Additional Options **2 1 7 0 – FFC – PK1 – P1 – T1**

Series..... 2-valve
Seat.....Soft seat
Process connection .....Block & bleed
Connection size..... 1/2" NPT
Valve type.....Female-female, Steel
Soft seat ..... PEEK
Packing.....PTFE
Stem tip ..... Non-rotating

Dimensions

Male-Female

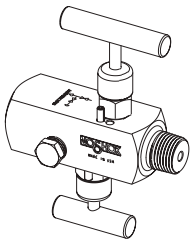

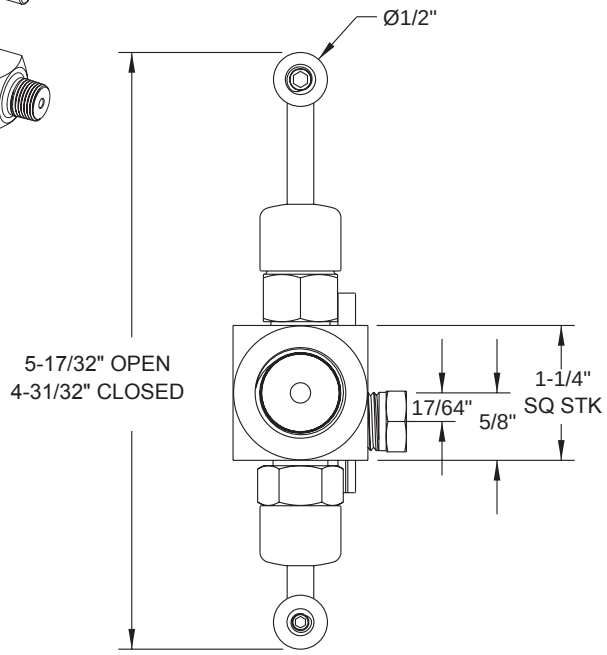

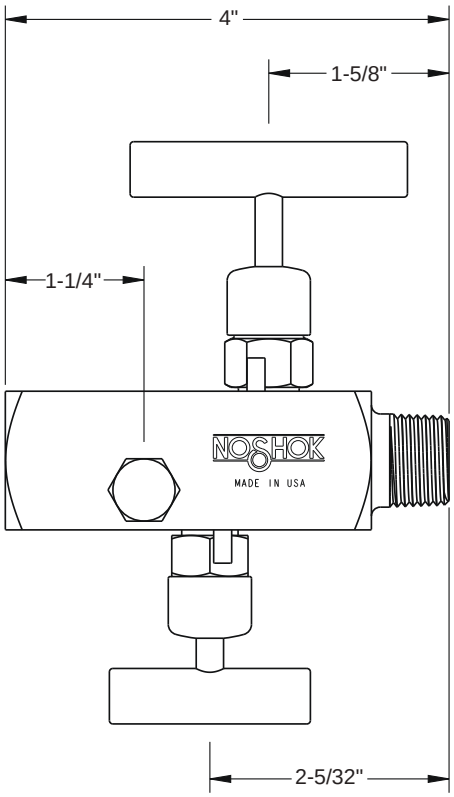

Extended Male-Female

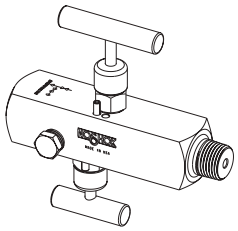

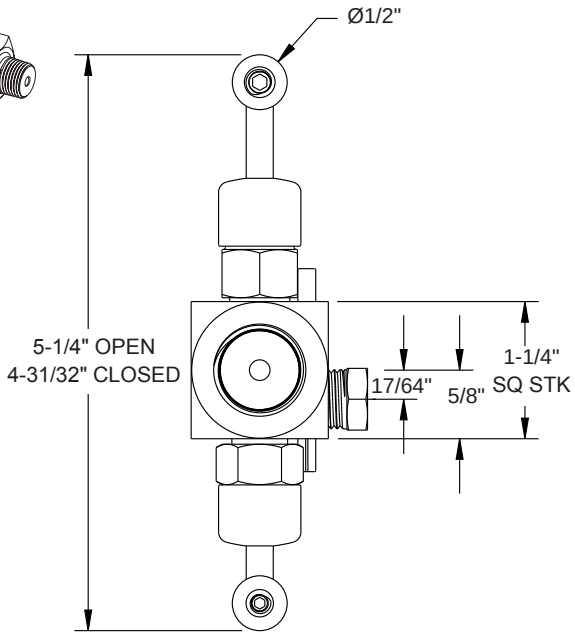

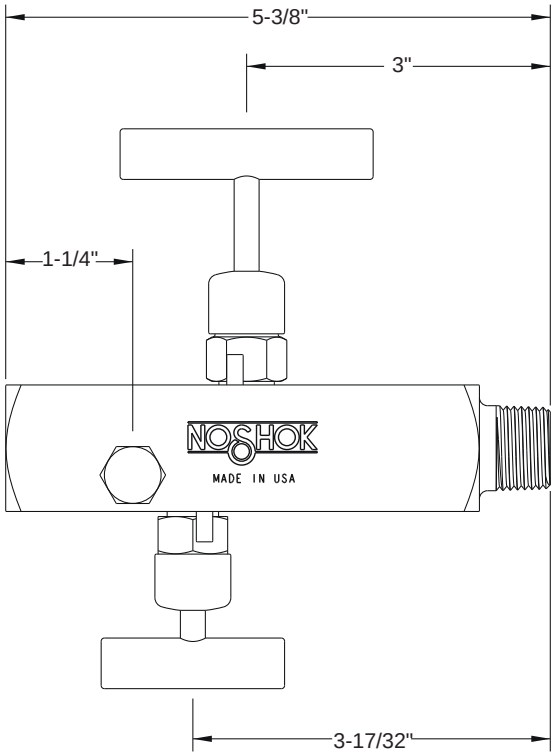

For panel mount, packing, & stem tip dimensions, see pgs. 64-67.

Block & Bleed, Soft Seat

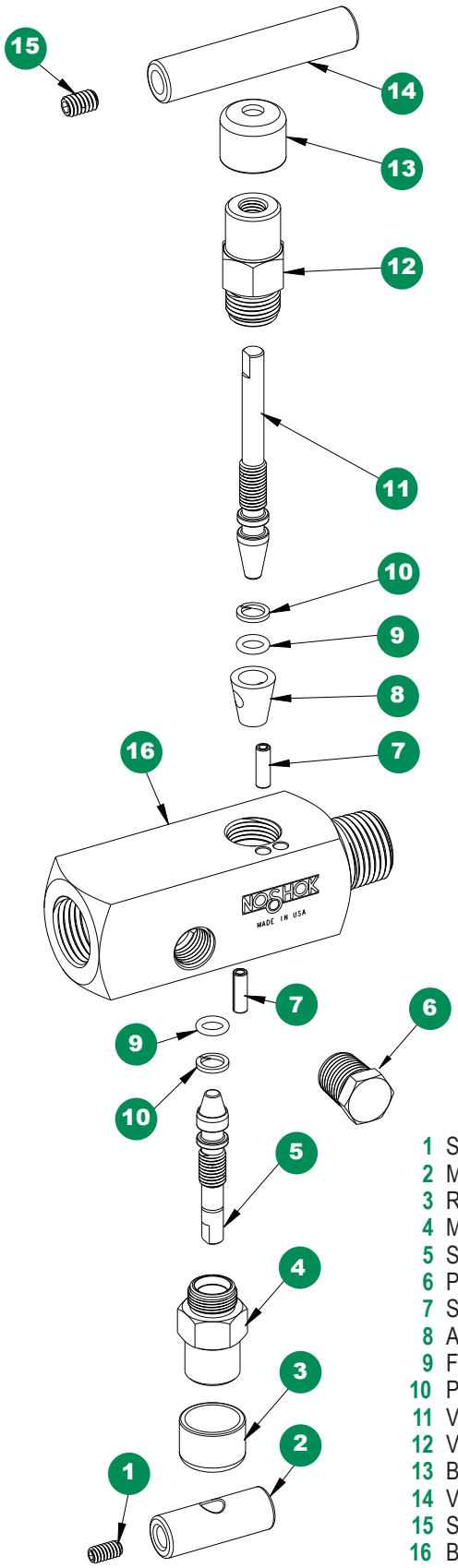

1 Set screw
2 Mini valve “T” handle
3 Red dust cap
4 Mini valve bonnet
5 Soft tip stem
6 Plug
7 Slotted spring pin
8 Acetal seat
9 FKM o-ring
10 PTFE back-up ring
11 Valve stem
12 Valve bonnet
13 Blue dust cap
14 Valve “T” handle
15 Set screw
16 Block and bleed valve body

Option With Packing

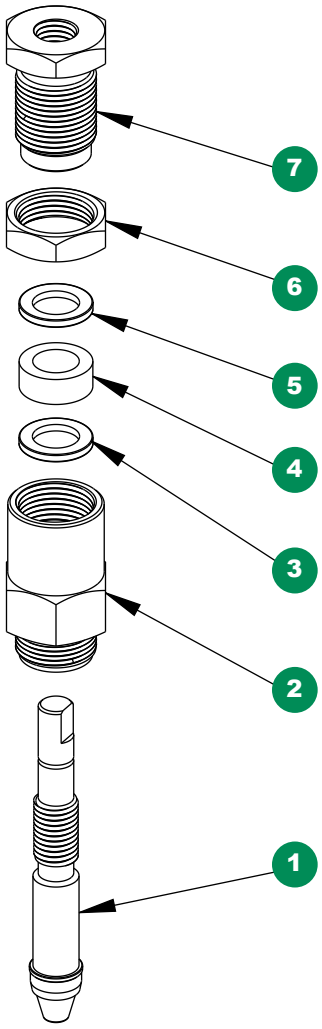

1 Soft tip packing stem and valve packing stem
2 Mini valve packing bonnet and valve packing bonnet
3 Packing washer
4 Packing
5 Packing washer
6 Jam nut
7 Packing adjustment screw

Double Block & Bleed, Hard Seat

3070 SERIES



- Combines isolating and venting in a single valve, eliminating the need for tubing and fittings
- Block valve isolates the downstream process fluids, and the bleed valve exhausts upstream fluids enabling instruments to be removed without disturbing the permanent piping installation on the bottom
- The 1/4" NPT vent plug is located 90° to the left and may be removed and replaced with exhaust piping to direct the fluids to a safe location
- 100% helium leak tested to 1 x 10^{-4} ml/s for performance and reliability
- Blow-out proof stem provides a secondary stem seal in the full open position
- FKM o-ring seal and PTFE back-up ring below the stem threads to protect from corrosion and galling; PTFE or Graphite packing optional
- All stem threads are rolled for strength and ease of operation
- One-piece bonnet with a metal-to-metal seal to the valve body below the bonnet threads
- Slotted spring pin to prevent accidental loosening
- Vinyl dust cap for bonnet and stem (non-packing)

Flow Schematic

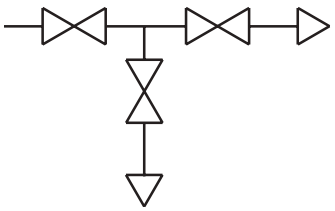

SPECIFICATIONS	
Materials	Zinc-Nickel plated Steel, electropolished 316 Stainless Steel*
Connection	1/2" & 1/4" NPT Male-female & Female-female configurations available, right venting optional
Pressure rating**	10,000 psi @ 200 °F
Orifice size	0.187"
Flow coefficient	C_V 0.44
Stem seal & type	All 316 Stainless Steel stems with FKM o-ring and PTFE back-up ring below the threads, PTFE or Graphite packing optional
Length	4" standard and 5-3/8" extended length available
Options	Panel mountings, o-ring materials, handles, packings, regulating stem and stem tips
Weight	Approximately 3.2 lb.

* All 316SS products meet the requirements of NACE MR0175/ISO 15156-3.
** If a packing option is chosen, maximum pressure rating is 6,000 psi. Refer to the "Pressure vs. Temperature: Packing Style with Compatible Fluid" chart at the back of this catalog.

⚠ **WARNING:** This product can expose you to chemicals including Lead and Nickel, which are known to the State of California to cause cancer and birth defects or other reproductive harm. For more information go to www.P65Warnings.ca.gov

NOTE: All NOSHOK valve products conform to the MSS SP-99 instrument valves standards, and valves supplied with packing also conform to MSS SP-132 compression packing systems for instrument valves standard.

Adaptive Industrial Solutions | sales@adaptiveind.com | (877) 818-5009

ORDERING INFORMATION						
SERIES	3	3-valve				
SEAT	0	Hard seat				
PROCESS TYPE	7	Block & bleed				
CONNECTION SIZES	0	1/2" NPT	2	1/4" NPT		
VALVE TYPES	MFC	Male-Female, Steel	FMC	Female-Male, Steel	FFCR	Female-Female, Steel, Right Vent
	MFCR	Male-Female, Steel, Right Vent	EFMC	Extended Female-Male, Steel	EFFC	Extended Female-Female, Steel
	EMFC	Extended Male-Female, Steel	FMS	Female-Male, Stainless Steel	FFS	Female-Female, Stainless Steel
	MFS	Male-Female, Stainless Steel	EFMS	Extended Female-Male, Stainless Steel	FFSR	Female-Female, Stainless Steel, Right Vent
	MFSR	Male-Female, Stainless Steel, Right Vent	FFC	Female-Female, Steel	EFFS	Extended Female-Female, Stainless Steel
	EMFS	Extended Male-Female, Stainless Steel				

Please consult your local NOSHOK Distributor or NOSHOK, Inc. for availability and delivery information.

EXAMPLE **3 0 7 0 – FFC**

Series.....3-valve
Seat.....Hard seat
Process connection..... Block & bleed
Connection size.....1/2" NPT
Valve type..... Female-female, Steel

To meet all of your specific application requirements, the following **additional options** are available for these needle valves. To order all or any of these options, simply add them to the part number as shown in the diagram below.

NOTE 1: The example shown includes ALL possible additional options. Please include ONLY the options required for your application when building your part number. (EXAMPLE: 3070-FFC-HL5)

NOTE 2: When a packing option is selected, an o-ring option is NOT available.

ORDERING INFORMATION - ADDITIONAL OPTIONS						
PACKINGS†	P1	PTFE	P2	Graphite		
STEM TIPS	T1	Non-rotating (316 Stainless)	T6	Ball (carbide)	T8	Ball (Monel)
	T5	Ball (440C Stainless)	T7	Ball (ceramic)	T9	Non-rotating regulating (316 Stainless)
O-RINGS*	EM1	EPDM	KZ1	FFKM (Perfluoroelastomer)	NB1	NBR
HANDLES	HL1	1-13/16" Mini "T"	HL3	1" Round knurled	HL5	1-3/4" Phenolic
	HL2	2-1/2" "T"	HL4	1-3/8" Phenolic		

Please consult your local NOSHOK Distributor or NOSHOK, Inc. for availability and delivery information.

† If a packing option is chosen, maximum pressure rating is 6,000 psi. Refer to the "Pressure vs. Temperature: Packing Style with Compatible Fluid" chart at the back of this catalog.

* Other o-ring materials available on request.

Please note that the standard o-ring in all the NOSHOK valves is FKM and the standard handles are block "T" handles (HL2) and bleed 1-3/8" mini "T" handle (HL7).

The handle material will always match the material of the valve, unless otherwise specified. For example, the "T" handle (HL2) on the 3070-FFC will be Steel. When only the standard configuration is needed, no additional designations are necessary. Please consult the factory for special application requests.

EXAMPLE with Additional Options **3 0 7 0 – FFC – P1 – T1 – HL3**

Series.....3-valve
Seat.....Hard seat
Process connection..... Block & bleed
Connection size.....1/2" NPT
Valve type..... Female-female, Steel
Packing.....PTFE
Stem tip..... Non-rotating
Handle..... 1" Round knurled

Dimensions

Male-Female

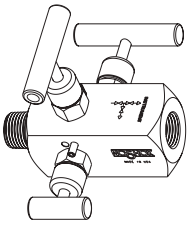

Top View

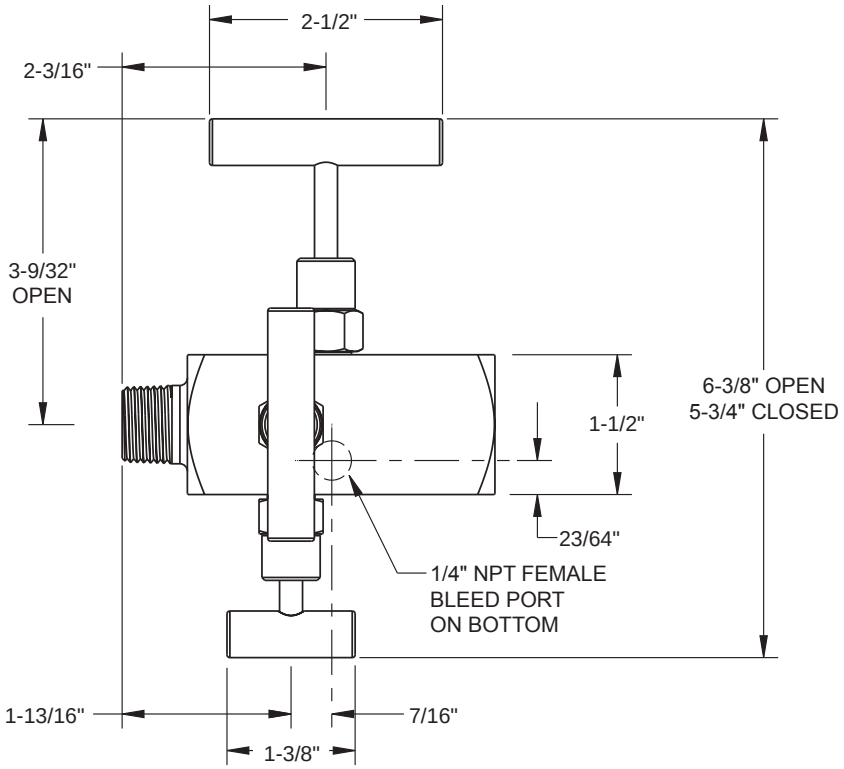

Front View

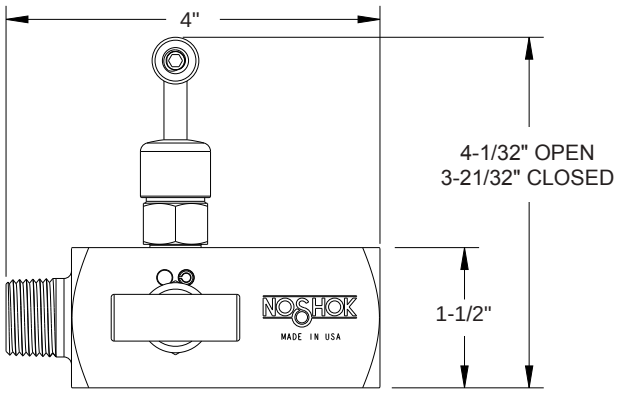

Side View

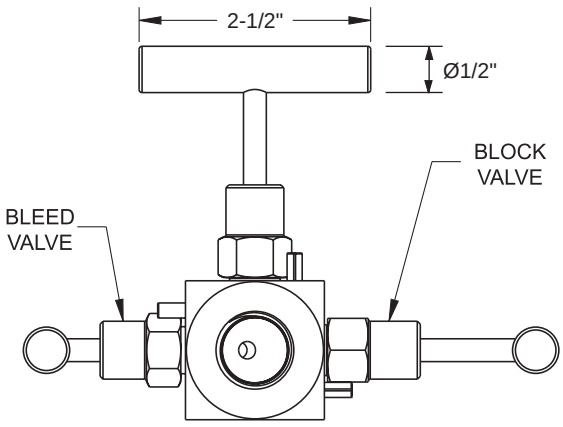

For panel mount, packing, & stem tip dimensions, see pgs. 64-67.

Double Block & Bleed, Hard Seat

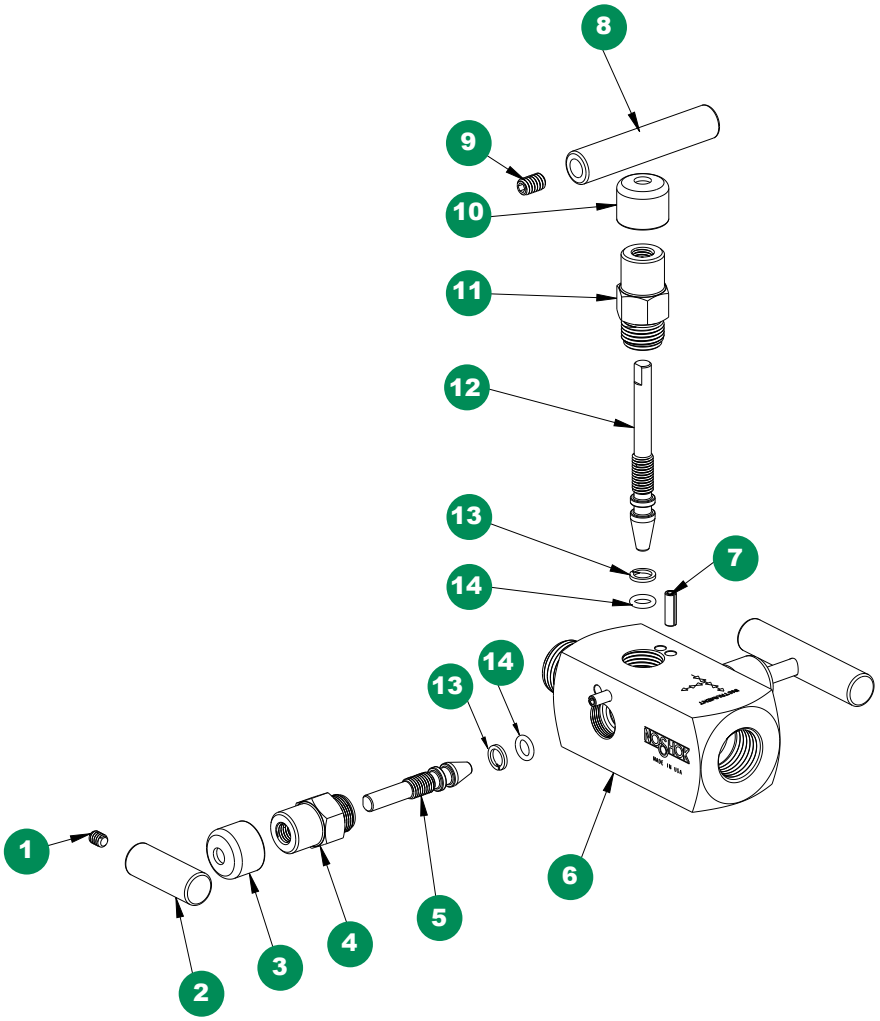

1 Set screw
2 Mini valve “T” handle
3 Red dust cap
4 Mini valve bonnet
5 Mini valve stem
6 Valve body
7 Slotted spring pin
8 Valve “T” handle
9 Set screw
10 Blue dust cap
11 Valve bonnet
12 Valve stem
13 PTFE back-up ring
14 FKM o-ring

Option With Packing

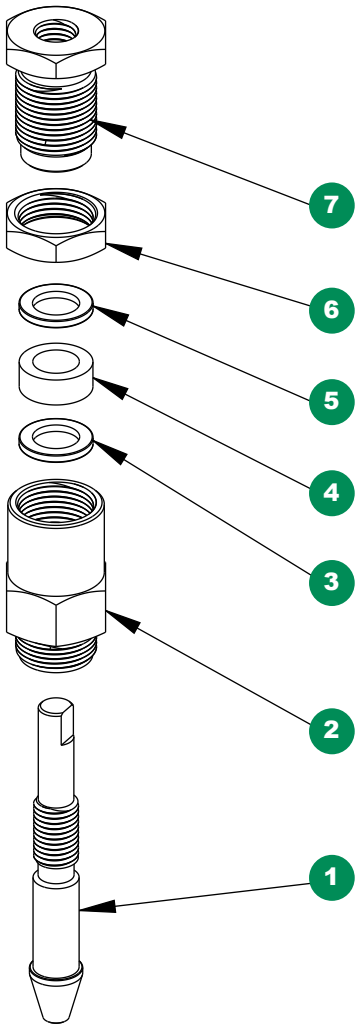

1 Mini valve packing stem and valve packing stem
2 Mini valve packing bonnet and valve packing bonnet
3 Packing washer
4 Packing
5 Packing washer
6 Jam nut
7 Packing adjustment screw

Knurled Handle HL3

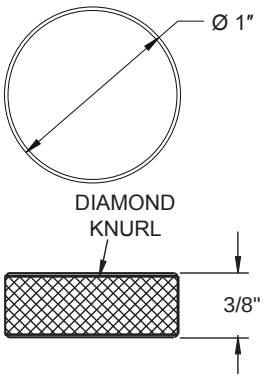

PART NUMBER	MATERIAL
HL3-CS1-ZN1	Steel
HL3-SS1-EP	Stainless Steel
HL3-BR1	Brass

Phenolic Handle HL4

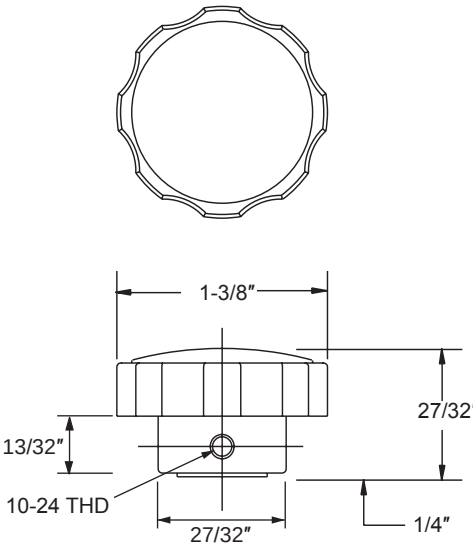

PART NUMBER	MATERIAL
HL4-PH1	Phenolic

Phenolic Handle HL5

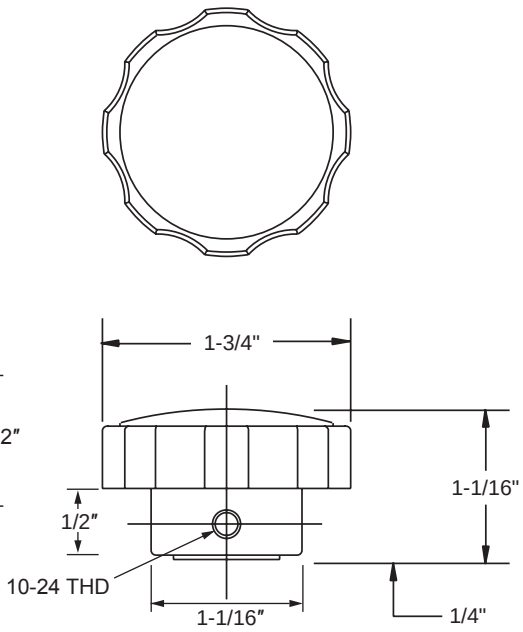

PART NUMBER	MATERIAL
HL5-PH1	Phenolic

Phenolic Handle HL9

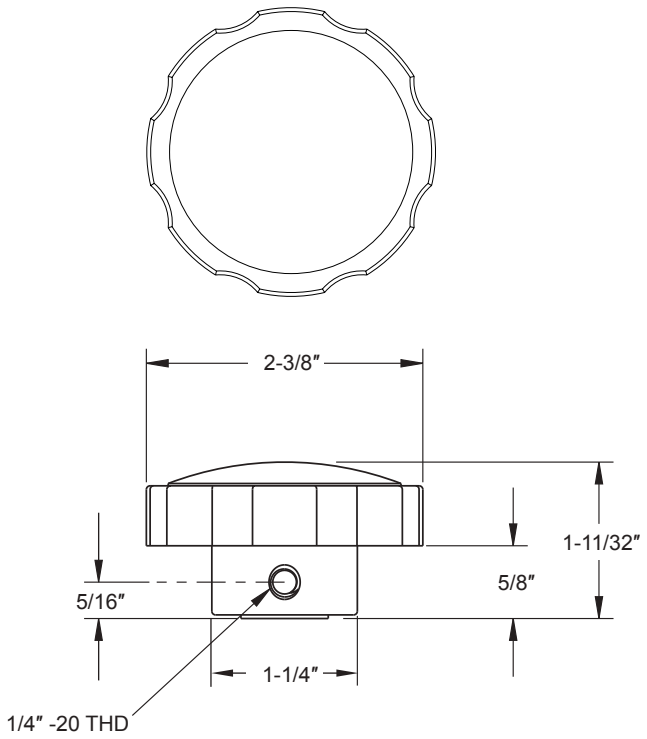

PART NUMBER	MATERIAL
HL9-PH1	Phenolic

Plug



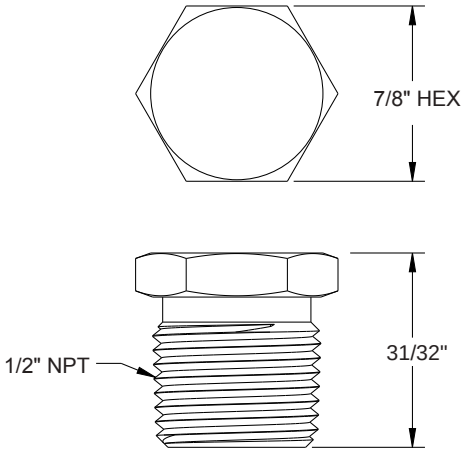

PART NUMBER	MATERIAL
PG1-CS1-ZN1	Steel
PG1-SS1-EP	Stainless Steel

Bleed Plug



Bleed Screw

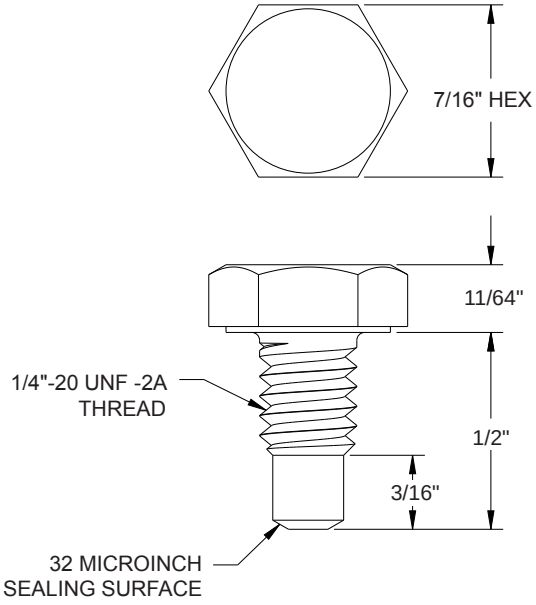

PART NUMBER	MATERIAL
BP1-C	Steel
BP1-S	Stainless Steel

Panel Mount Detail, Mini Valves

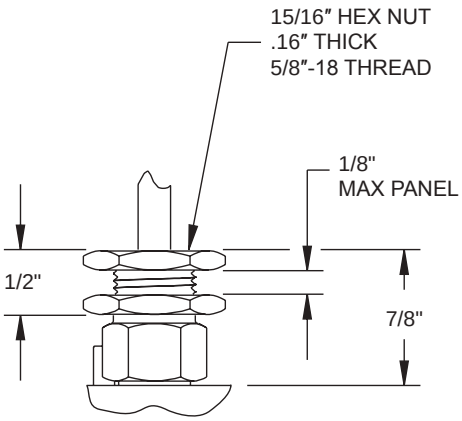

Panel Mount Detail, Needle Valves

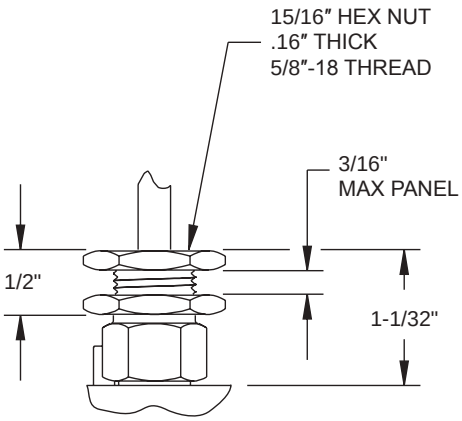

Packing, Mini Valves

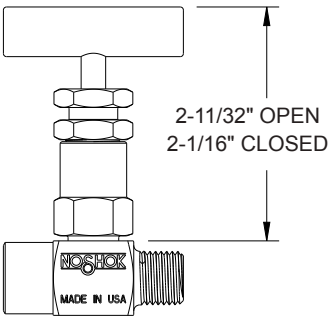

Packing, Needle Valves

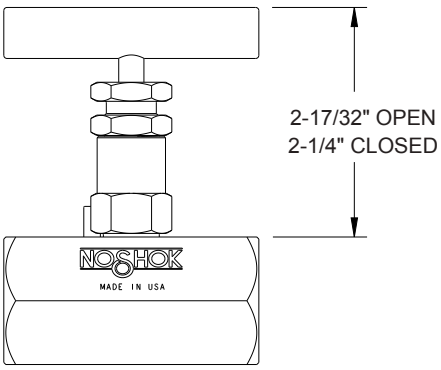

Stem Tip Options

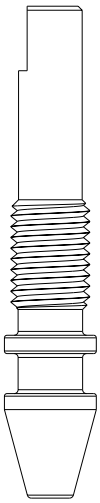

STANDARD
CONE TIP

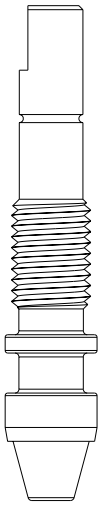

NON-ROTATING
CONE TIP

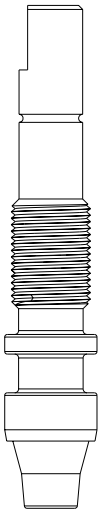

NON-ROTATING
REGULATING TIP



NON-ROTATING
BALL TIP

NOTE: A non-rotating tip (ball) can rotate independently of the stem. The term non-rotating describes the motion of the tip (ball) in relation to a rotating stem. As the stem rotates to close a valve, the tip (ball) stops rotating when it makes contact with the sealing orifice of the body.

Block & Bleed, Hard Seat & Soft Seat

2000/2100 SERIES



Note: Packing option shown.

- Combines isolating and venting in a single valve, eliminating the need for tubing and fittings
- Block valve isolates the downstream process fluids and the bleed valve exhausts upstream fluids enabling static pressure transmitters, switches or gauges to be removed without disturbing the permanent piping installation
- Block valve is located on the left side and the bleed valve is located on top in a 90º orientation, venting is to the right
- 100% helium leak tested to 1 x 10^{-4} ml/s for performance and reliability
- 2100 Series valve also features a replaceable Acetal seat, and straight through porting for bidirectional, high capacity flow and easy roddable cleaning
- Blow-out proof stem provides a secondary stem seal in the full open position
- FKM o-ring seal and PTFE back-up ring below the stem threads to protect from corrosion and galling; PTFE or Graphite packing optional
- Stem and bonnet threads are rolled for strength and ease of operation
- One-piece bonnet with a metal-to-metal seal to the valve body below the bonnet threads
- Slotted spring pin to prevent accidental loosening
- Color coded vinyl dust caps for bonnets and stems (non-packing)
- Zinc-Nickel plated high tensile strength 4140 Steel mounting bolts included for flanged connections

Flow Schematic

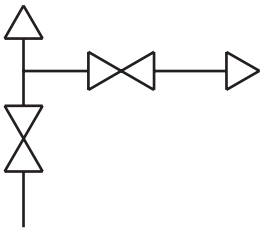

SPECIFICATIONS

Materials	Zinc-Nickel plated Steel, electropolished 316 Stainless Steel*
Connection	1/2" NPT, 1/4" NPT, NPT-flange, Flange-flange, NPT-NPT configurations available
Pressure ratings**	Hard seat: 10,000 psi @ 200 °F Soft seat: 6,000 psi @ 200 °F
Orifice size	0.187"
Flow coefficient	Hard seat: C_V 0.44 Soft seat: C_V 0.76
Stem seal & type	All 316 Stainless Steel stems with FKM o-ring and PTFE back-up ring below the threads, PTFE or Graphite packing optional
Options	Panel mountings, o-ring materials, handles, packings, regulating stem and stem tips
Weight	Approximately 2.2 lb.

* All 316SS products meet the requirements of NACE MR0175/ISO 15156-3.
** If a packing option is chosen, maximum pressure rating is 6,000 psi.
Refer to the "Pressure vs. Temperature: Packing Style with Compatible Fluid" chart at the back of this catalog.

⚠ **WARNING:** This product can expose you to chemicals including Lead and Nickel, which are known to the State of California to cause cancer and birth defects or other reproductive harm. For more information go to www.P65Warnings.ca.gov

NOTE: All NOSHOK valve products conform to the MSS SP-99 instrument valves standards, and valves supplied with packing also conform to MSS SP-132 compression packing systems for instrument valves standard.

SERIES	**2**	2-valve				
SEATS	**0**	Hard seat	**1**	Soft seat		
PROCESS TYPE	**0**	Static pressure				
CONNECTIONS	**0**	1/2" NPT standard or flange	**2**	1/4" NPT		
VALVE TYPES	**MFC**	Flange-Female, Steel	**MFS**	Flange-Female,Stainless Steel	**MMC**	Flange-Flange, Steel
	FFC	Female-Female, Steel	**FFS**	Female-Female, Stainless Steel	**MMS**	Flange-Flange, Stainless Steel

Please consult your local NOSHOK Distributor or NOSHOK, Inc. for availability and delivery information.

EXAMPLE **2 1 0 0 – MFC**

Series..... 2-valve
Seat.....Soft seat
Process type.....Static pressure
Connection..... 1/2" NPT standard or flange
Valve type.....Flange-female, Steel

To meet all of your specific application requirements, the following **additional options** are available for these manifold valves. To order all or any of these options, simply add them to the part number as shown in the diagram below.

NOTE 1: The example shown includes ALL possible additional options. Please include ONLY the options required for your application when building your part number. (EXAMPLE: 2100-MFC-P1)

NOTE 2: When a packing option is selected, an o-ring option is NOT available.

NOTE 3: T1 Hard non-rotating (316 SS standard) stem tip is the only option available on the 2100 Series soft seat version.

ORDERING INFORMATION - ADDITIONAL OPTIONS						
SOFT SEATS	**PK1**	PEEK	**KF1**	PCTFE		
PACKINGS†	**P1**	PTFE	**P2**	Graphite**		
STEM TIPS	**T1**	Non-rotating (316 Stainless)	**T6**	Ball (carbide)**	**T8**	Ball (Monel)**
	T5	Ball (440C Stainless)**	**T7**	Ball (ceramic)**	**T9**	Non-rotating regulating (316 Stainless)**
O-RINGS*	**EM1**	EPDM	**KZ1**	FFKM (Perfluoroelastomer)	**NB1**	NBR
HANDLES	**HL1**	1-13/16" Mini "T"	**HL4**	1-3/8" Phenolic		
	HL3	1" Round knurled	**HL5**	1-3/4" Phenolic		

Please consult your local NOSHOK Distributor or NOSHOK, Inc. for availability and delivery information.

† If a packing option is chosen, maximum pressure rating is 6,000 psi. Refer to the "Pressure vs. Temperature: Packing Style with Compatible Fluid" chart at the back of this catalog.

* Other o-ring materials available on request.

** For 2000 Series only.

Please note that the standard o-ring in all the NOSHOK valves is FKM and the standard handles are block "T" handles (HL2) and bleed 1-3/8" mini "T" handle (HL7).

The handle material will always match the material of the valve, unless otherwise specified. For example, the "T" handle (HL2) on the 2100-MFC will be Steel. When only the standard configuration is needed, no additional designations are necessary. Please consult the factory for special application requests.

EXAMPLE with Additional Options **2 1 0 0 – MFC – PK1 – P1**

Series.....2-valve
Seat..... Soft seat
Process type.....Static pressure
Connection..... 1/2" NPT standard or flange
Valve type..... Flange-female, Steel
Soft seat.....PEEK
Packing..... PTFE

Dimensions

Flange-Flange

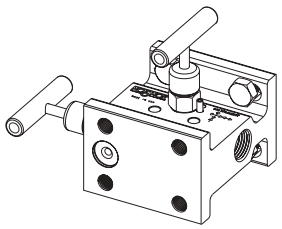

Top View

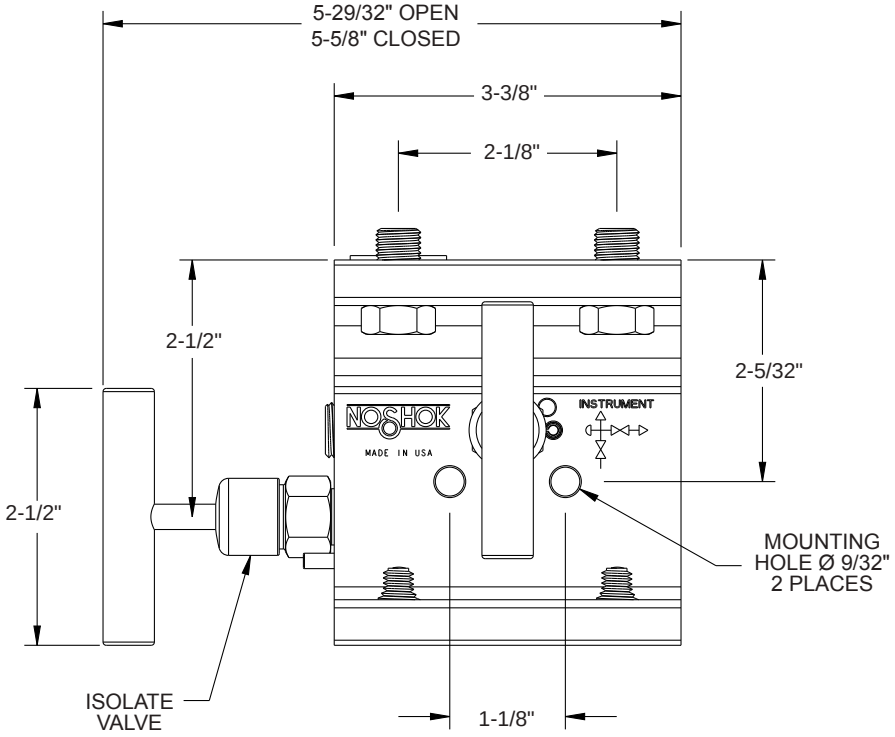

Side View

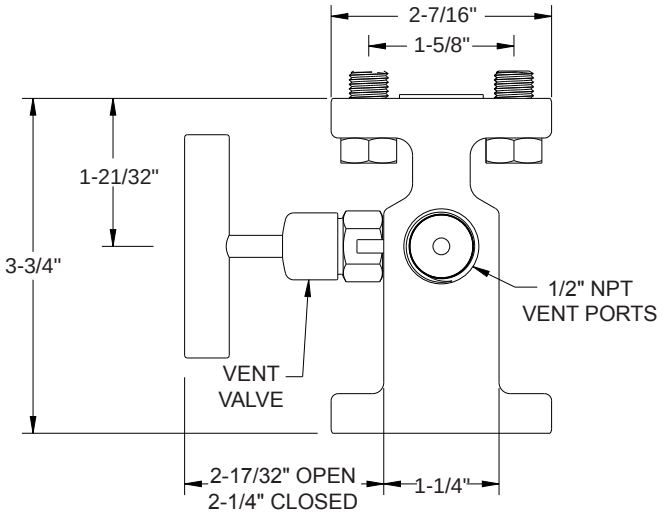

Adaptive Industrial Solutions
sales@adaptiveind.com
(877) 818-5009

Flange-Female

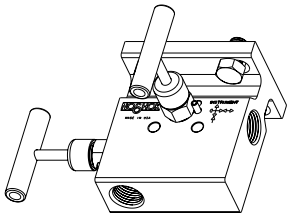

Top View

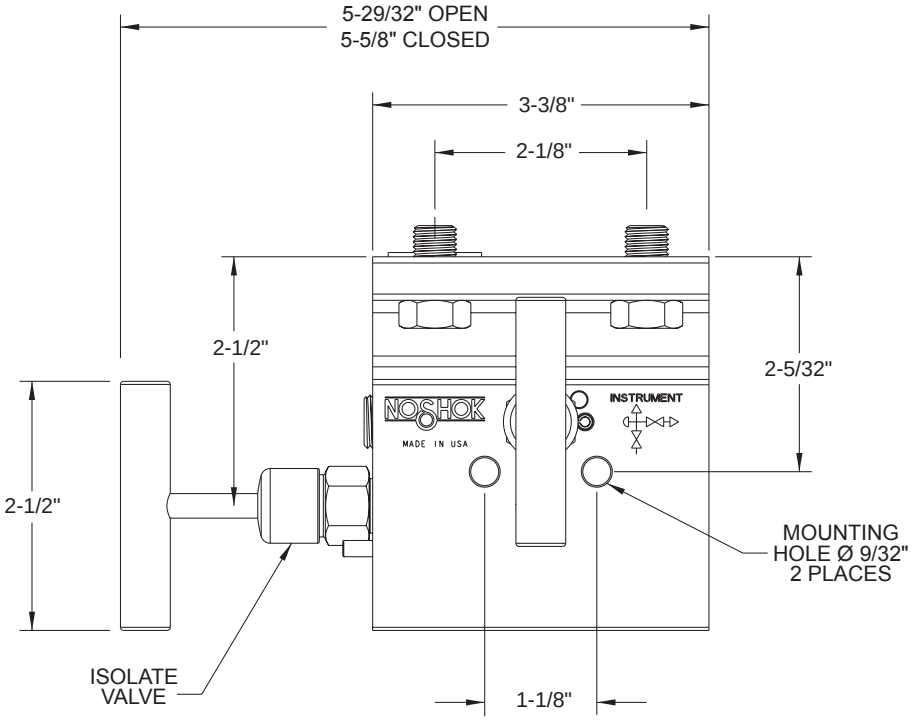

Side View

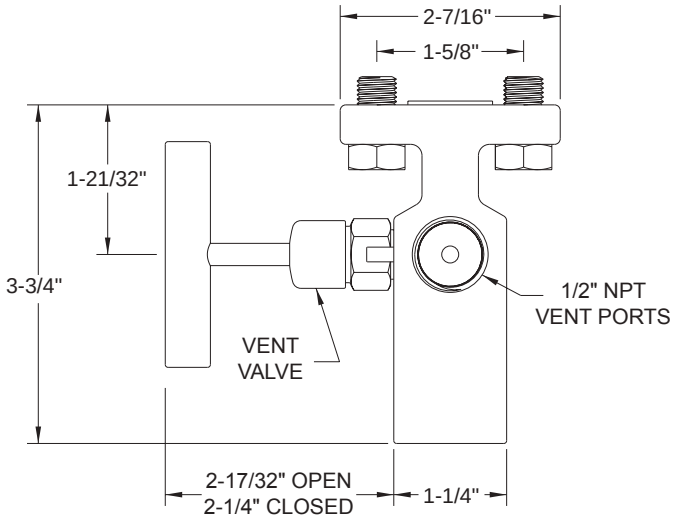

Dimensions

Female-Female

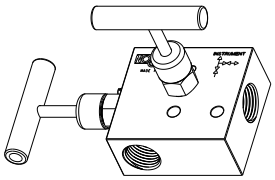

Top View

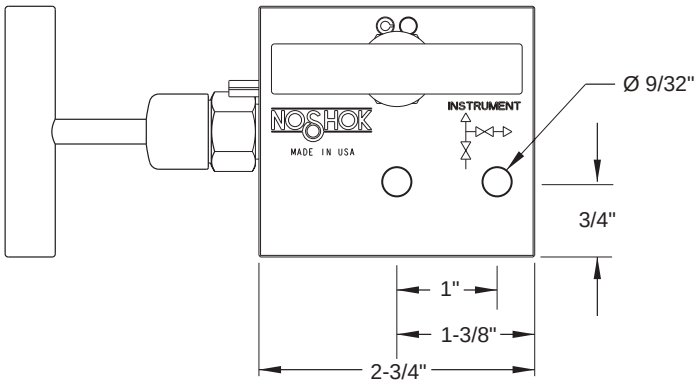

Front View

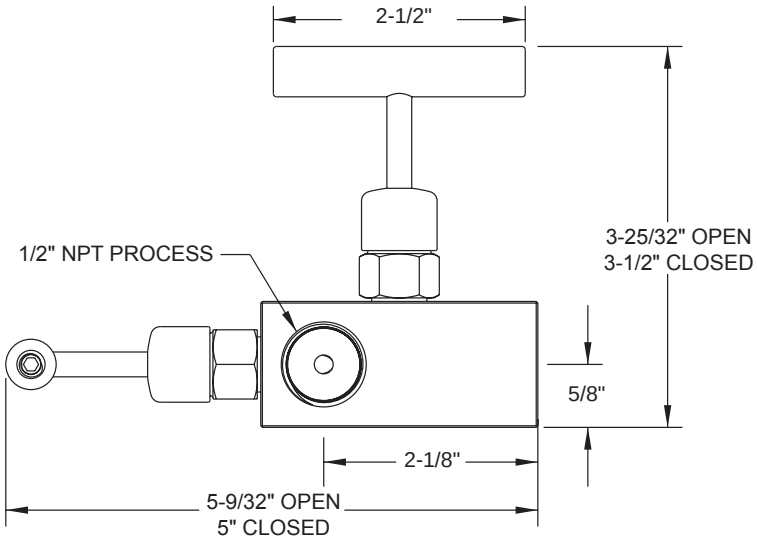

Side View

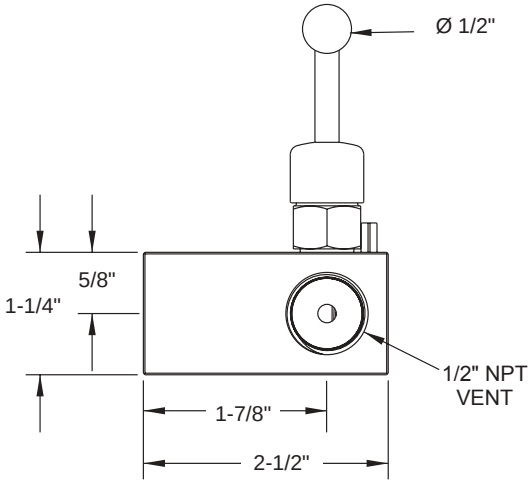

For panel mount or packing dimensions, see pg. 66.

Hard Seat

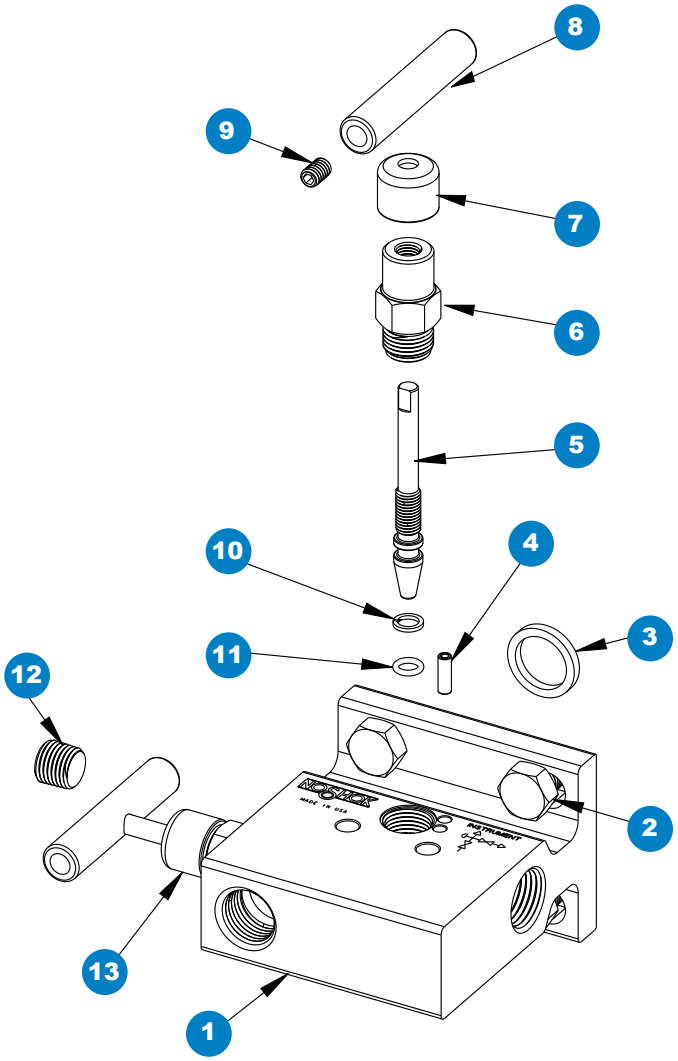

1 Valve body
2 Head bolt
3 Gasket ring
4 Slotted spring pin
5 Valve stem
6 Valve bonnet
7 Red dust cap
8 Valve “T” handle
9 Set screw
10 PTFE back-up ring
11 FKM o-ring
12 Plug
13 Blue dust cap

Soft Seat

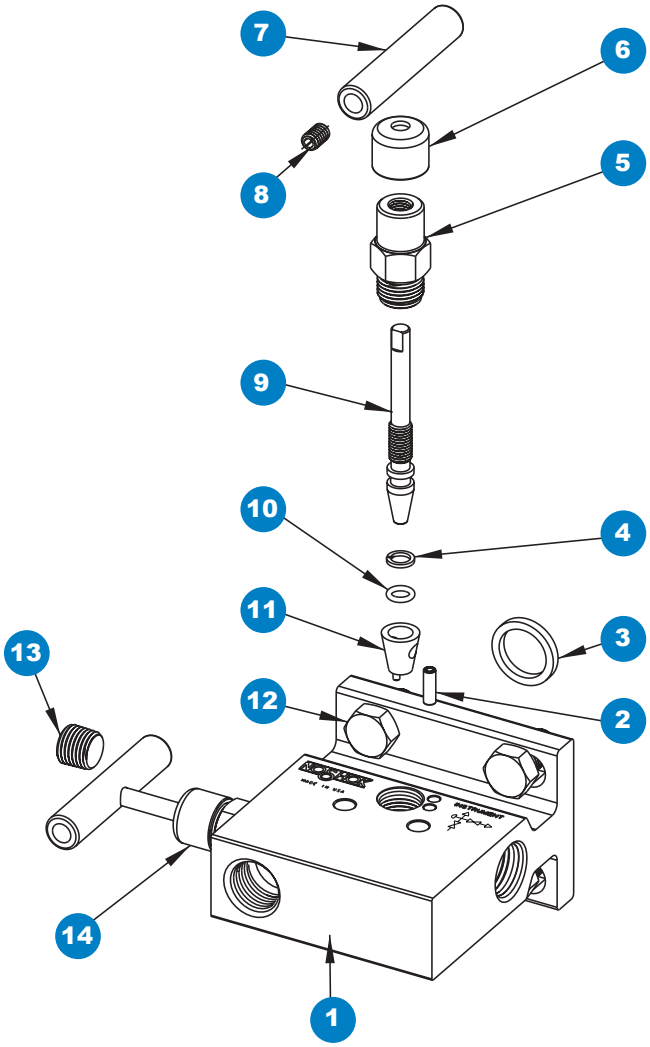

1 Valve body
2 Slotted spring pin
3 Gasket ring
4 PTFE back-up ring
5 Valve bonnet
6 Red dust cap
7 Valve“T” handle
8 Set screw
9 Valve stem
10 FKM o-ring
11 Acetal seat
12 Head bolt
13 Plug
14 Blue dust cap

Hard & Soft Seat

2020/2120 SERIES



- Designed for use with differential pressure transmitters in liquid level applications
- Available in either single flange or double flange connection for direct installation
- 100% helium leak tested to 1 x 10^{-4} ml/s for performance and reliability
- 2120 Series valves also feature a replaceable Acetal seat, and straight through porting for bidirectional, high capacity flow and easy roddable cleaning
- Blow-out proof stem provides a secondary stem seal in the full open position
- FKM o-ring seal and PTFE back-up ring below the stem threads to protect from corrosion and galling; PTFE or Graphite packing optional
- All stem threads are rolled for strength and ease of operation
- One-piece bonnet with a metal-to-metal seal to the valve body below the bonnet threads
- Slotted spring pin to prevent accidental loosening
- Color coded vinyl dust caps for bonnets and stems (non-packing)

Flow Schematic

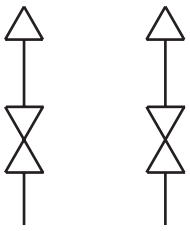

SPECIFICATIONS	
Materials	Zinc-Nickel plated Steel, electropolished 316 Stainless Steel*
Connections	Flange-flange, 1/2" NPT-flange
Pressure ratings**	Hard seat: 10,000 psi @ 200 °F Soft seat: 6,000 psi @ 200 °F
Orifice size	0.187"
Flow coefficient	Hard seat: C_V 0.44 Soft seat: C_V 0.76
Stem seal & type	All 316 Stainless Steel stems with FKM o-ring and PTFE back-up ring below the threads, PTFE or Graphite packing optional
Options	Panel mountings, o-ring materials, handles, packings, regulating stem and stem tips
Weight	Approximately 5.5 lb.

* All 316SS products meet the requirements of NACE MR0175/ISO 15156-3.
** If a packing option is chosen, maximum pressure rating is 6,000 psi. Refer to the "Pressure vs. Temperature: Packing Style with Compatible Fluid" chart at the back of this catalog.

⚠ **WARNING:** This product can expose you to chemicals including Lead and Nickel, which are known to the State of California to cause cancer and birth defects or other reproductive harm. For more information go to www.P65Warnings.ca.gov

NOTE: All NOSHOK valve products conform to the MSS SP-99 instrument valves standards, and valves supplied with packing also conform to MSS SP-132 compression packing systems for instrument valves standard.

Adaptive Industrial Solutions | sales@adaptiveind.com | (877) 818-5009

SERIES	2	2-valve		
SEATS	0	Hard seat	1	Soft seat
PROCESS TYPE	2	Liquid level		
CONNECTIONS	0	1/2" NPT standard or flange		
VALVE TYPES	MFC	Flange-Female, Steel	MFS	Flange-Female, Stainless Steel
	MMC	Flange-Flange, Steel	MMS	Flange-Flange, Stainless Steel

Please consult your local NOSHOK Distributor or NOSHOK, Inc. for availability and delivery information.

EXAMPLE

2 0 2 0 – MFC

Series..... 2-valve
Seat..... Hard seat
Process type.....Liquid level
Connection..... 1/2" NPT standard or flange
Valve type.....Flange-female, Steel

To meet all of your specific application requirements, the following **additional options** are available for these manifold valves. To order all or any of these options, simply add them to the part number as shown in the diagram below.

NOTE 1: The example shown includes ALL possible additional options. Please include ONLY the options required for your application when building your part number. (EXAMPLE: 2020-MFC-P1)

NOTE 2: When a packing option is selected, an o-ring option is NOT available.

NOTE 3: The standard o-ring in all the NOSHOK manifold valves is FKM and T1 hard non-rotating (316SS) stem tip is the only option available on the 2120 Series soft seat version.

ORDERING INFORMATION - ADDITIONAL OPTIONS						
SOFT SEATS	PK1	PEEK***	KF1	PCTFE***		
PACKINGS†	P1	PTFE	P2	Graphite**		
STEM TIPS	T1	Non-rotating (316 Stainless)	T6	Ball (carbide)**	T8	Ball (Monel)**
	T5	Ball (440C Stainless)**	T7	Ball (ceramic)**	T9	Non-rotating regulating (316 Stainless)**
O-RINGS*	EM1	EPDM	KZ1	FFKM (Perfluoroelastomer)	NB1	NBR
HANDLES	HL1	1-13/16" Mini "T"	HL4	1-3/8" Phenolic		
	HL3	1" Round knurled	HL5	1-3/4" Phenolic		

Please consult your local NOSHOK Distributor or NOSHOK, Inc. for availability and delivery information.

† If a packing option is chosen, maximum pressure rating is 6,000 psi. Refer to the "Pressure vs. Temperature: Packing Style with Compatible Fluid" chart at the back of this catalog.
* Other o-ring materials available on request.
** For 2020 Series only.
*** For 2120 Series only.

Please note that the standard o-ring in all the NOSHOK valves is FKM and the standard handles are "T" handles (HL2).

The handle material will always match the material of the valve, unless otherwise specified. For example, the "T" handle (HL2) on the 2020-MFC will be Steel. When only the standard configuration is needed, no additional designations are necessary. Please consult the factory for special application requests.

EXAMPLE with Additional Options

2 0 2 0 – MFC – P1 – T1

Series..... 2-valve
Seat..... Hard seat
Process type.....Liquid level
Connection..... 1/2" NPT standard or flange
Valve type.....Flange-female, Steel
Packing.....PTFE
Stem tip ..... Non-rotating

Dimensions

Flange-Flange

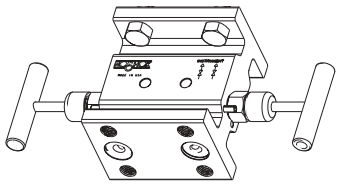

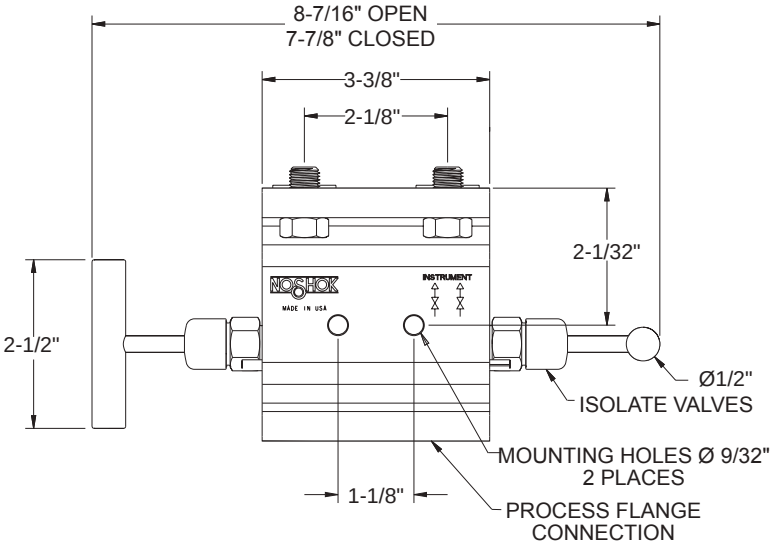

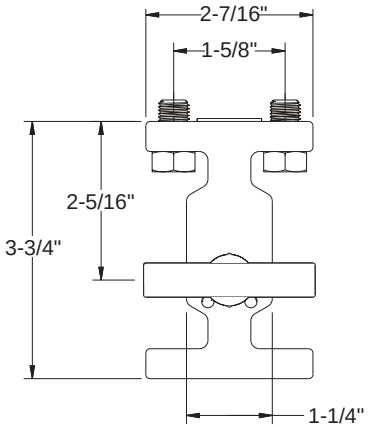

Flange-Female

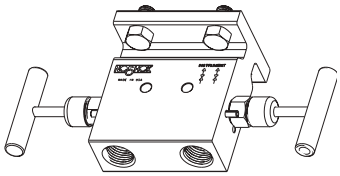

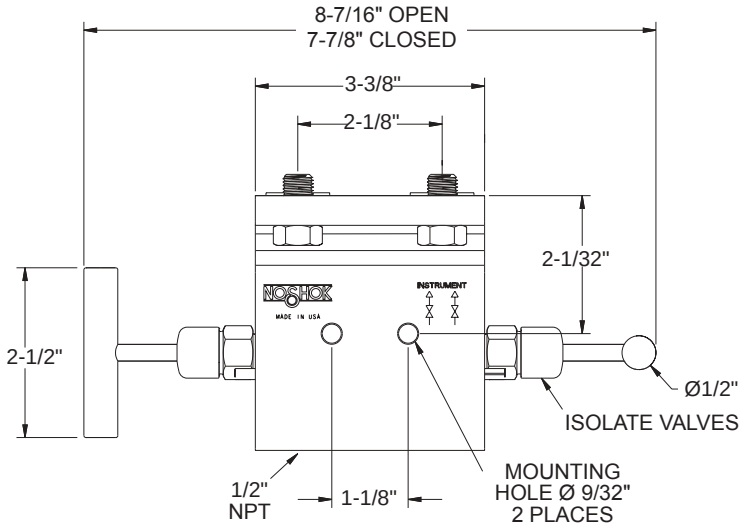

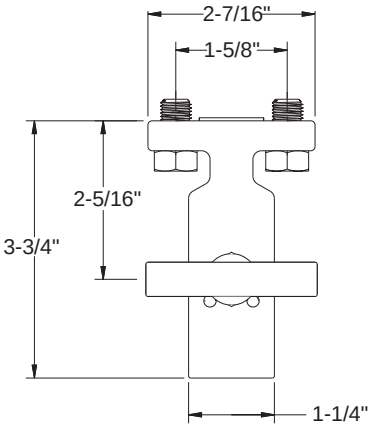

For panel mount or packing dimensions, see pg. 66.

Hard Seat

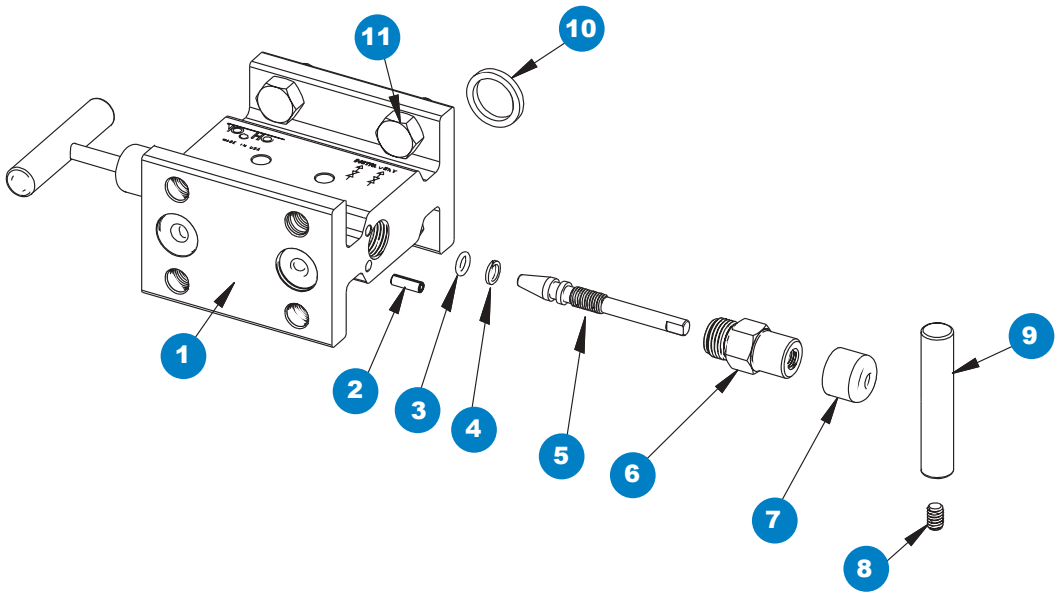

1 Valve body
2 Slotted spring pin
3 FKM o-ring
4 PTFE back-up ring
5 Valve stem
6 Valve bonnet
7 Blue dust cap
8 Set screw
9 Valve"T" handle
10 Gasket ring
11 Head bolt

Soft Seat

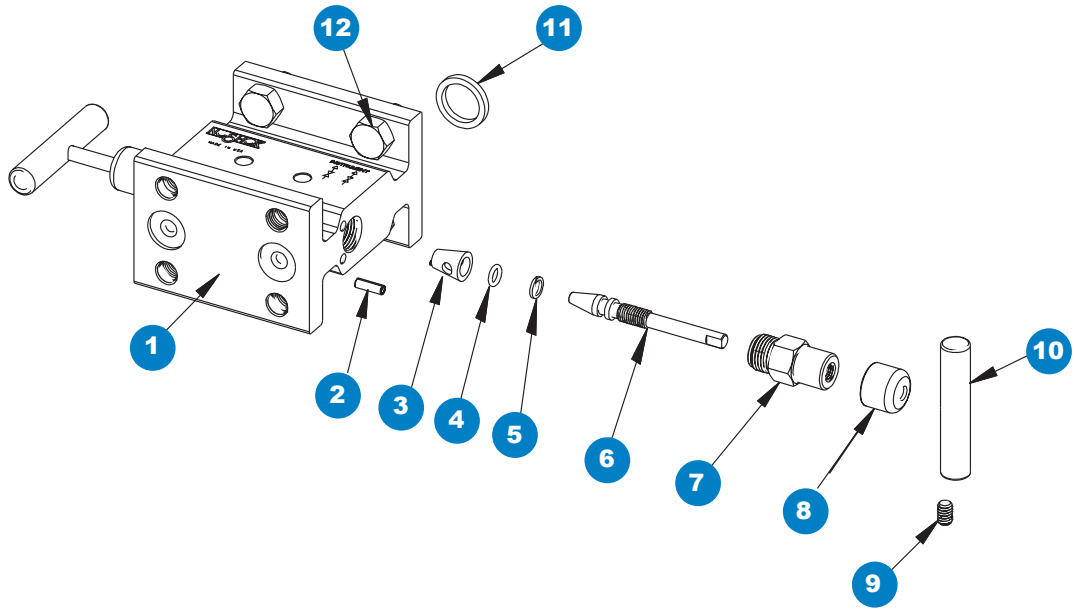

1 Valve body
2 Slotted spring pin
3 Acetal seat
4 FKM o-ring
5 PTFE back-up ring
6 Valve stem
7 Valve bonnet
8 Blue dust cap
9 Set screw
10 Valve"T" handle
11 Gasket ring
12 Head bolt

Narrow Block & Bleed, Hard Seat & Soft Seat

200002/210002 SERIES
200402/210402 SERIES

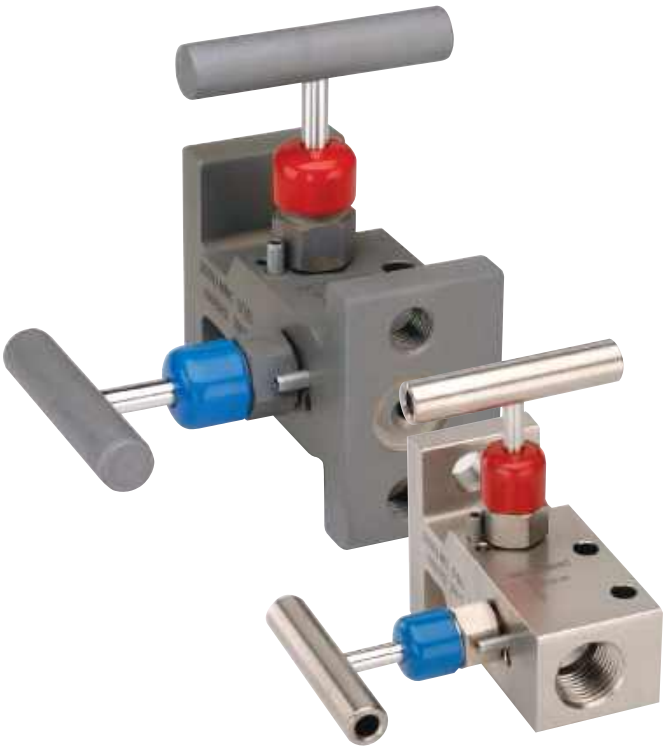

- Combines isolating and venting in a single valve, eliminating the need for tubing and fittings
- Block valve isolates the downstream process fluids and the bleed valve exhausts upstream fluids enabling static pressure transmitters, switches or gauges to be removed without disturbing the permanent piping installation
- Block valve is located on the left side and the bleed valve is located on top in a 90° orientation, venting is to the right
- 100% helium leak tested to 1 x 10^{-4} ml/s for performance and reliability
- 210002/210402 Series valves also feature a replaceable Acetal seat, and straight through porting for bidirectional, high capacity flow and easy roddable cleaning
- PCTFE or PEEK soft seat optional
- Blow-out proof stem provides a secondary stem seal in the full open position
- FKM o-ring seal and PTFE back-up ring below the stem threads to protect from corrosion and galling; PTFE or Graphite packing optional
- Stem and bonnet threads are rolled for strength and ease of operation
- One-piece bonnet with a metal-to-metal seal to the valve body below the bonnet threads
- Slotted spring pin to prevent accidental loosening
- Color coded vinyl dust caps for bonnets and stems (non-packing)

Flow Schematic

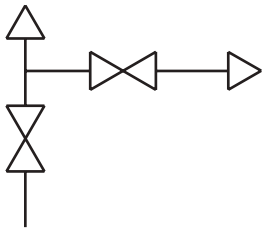

SPECIFICATIONS	
Materials	Zinc-Nickel plated Steel, electropolished 316 Stainless Steel*
Connection	200002/210002 Series: Flange-flange, 1/4" NPT vent 200402/210402 Series: 1/2" NPT-flange, 1/4" NPT vent 200202/210202 Series: 1/4" NPT-flange, 1/4" NPT vent Left venting optional
Pressure ratings**	Hard seat: 10,000 psi @ 200 °F Soft seat: 6,000 psi @ 200 °F
Orifice size	0.187"
Flow coefficient	Hard seat: C_V 0.44 Soft seat: C_V 0.76
Stem seal & type	All 316 Stainless Steel stems with FKM o-ring and PTFE back-up ring below the threads, PTFE or Graphite packing optional
Options	Panel mountings, o-ring materials, handles, packings, regulating stem and stem tips
Weight	Approximately 2.5 lb.

* All 316SS products meet the requirements of NACE MR0175/ISO 15156-3.
** If a packing option is chosen, maximum pressure rating is 6,000 psi. Refer to the "Pressure vs. Temperature: Packing Style with Compatible Fluid" chart at the back of this catalog.

⚠ **WARNING:** This product can expose you to chemicals including Lead and Nickel, which are known to the State of California to cause cancer and birth defects or other reproductive harm. For more information go to www.P65Warnings.ca.gov

NOTE: All NOSHOK valve products conform to the MSS SP-99 instrument valves standards, and valves supplied with packing also conform to MSS SP-132 compression packing systems for instrument valves standard.

SERIES	**2**	2-valve					
SEATS	**0**	Hard seat	**1**	Soft seat			
PROCESS TYPE	**0**	Static pressure					
CONNECTIONS	**0**	Flange-flange	**2**	1/4" NPT-flange	**4**	1/2" NPT-flange (standard)	
VENT	**02**	1/4" NPT					
VALVE TYPES	**MFC**	Flange-Female, Steel	**MMS**	Flange-Flange, Stainless Steel	**MMCL**	Flange-Flange, Steel, Left Vent	
	MFS	Flange-Female, Stainless Steel	**MFCL**	Flange-Female, Steel, Left Vent	**MMSL**	Flange-Flange, Stainless Steel, Left Vent	
	MMC	Flange-Flange, Steel	**MFSL**	Flange - Female, Stainless Steel, Left Vent			

Please consult your local NOSHOK Distributor or NOSHOK, Inc. for availability and delivery information.

EXAMPLE **2 0 0 4 02 – MFC**

Series..... 2-valve
Seat..... Hard seat
Process type..... Static pressure
Connection..... 1/2" NPT-Flange
Vent..... 1/4" NPT
Valve type..... Flange-female, Steel

To meet all of your specific application requirements, the following **additional options** are available for these manifold valves. To order all or any of these options, simply add them to the part number as shown in the diagram below.

NOTE 1: The example shown includes ALL possible additional options. Please include ONLY the options required for your application when building your part number. (EXAMPLE: 200402-MFC-P1)

NOTE 2: When a packing option is selected, an o-ring option is NOT available.

NOTE 3: T1 Hard non-rotating (316 Stainless standard) stem tip is the only option available on the 210002/210402 Series soft seat version.

ORDERING INFORMATION - ADDITIONAL OPTIONS							
PACKINGS†	**P1**	PTFE	**P2**	Graphite**			
STEM TIPS	**T1**	Non-rotating (316 Stainless)	**T6**	Ball (carbide)**	**T8**	Ball (Monel)**	
	T5	Ball (440C Stainless)**	**T7**	Ball (ceramic)**	**T9**	Non-rotating regulating (316 Stainless)**	
O-RINGS*	**EM1**	EPDM	**KZ1**	FFKM (Perfluoroelastomer)	**NB1**	NBR	
HANDLES	**HL1**	1-13/16" Mini "T"	**HL4**	1-3/8" Phenolic			
	HL3	1" Round knurled	**HL5**	1-3/4" Phenolic			

Please consult your local NOSHOK Distributor or NOSHOK, Inc. for availability and delivery information.

† If a packing option is chosen, maximum pressure rating is 6,000 psi. Refer to the "Pressure vs. Temperature: Packing Style with Compatible Fluid" chart at the back of this catalog.
* Other o-ring materials available on request.
** For hard seat only.

Please note that the standard o-ring in all the NOSHOK valves is FKM and the standard handles are block "T" handles (HL2) and bleed 1-3/8" mini "T" handle (HL7).

The handle material will always match the material of the valve, unless otherwise specified. For example, the "T" handle (HL2) on the 200402-MFC will be Steel. When only the standard configuration is needed, no additional designations are necessary. Please consult the factory for special application requests.

EXAMPLE with Additional Options **2 0 0 4 02 – MFC – P1 – T1**

Series..... 2-valve
Seat..... Hard seat
Process type..... Static pressure
Connection..... 1/2" NPT-Flange
Vent..... 1/4" NPT
Valve type..... Flange-female, Steel
Packing..... PTFE
Stem tip..... Non-rotating

Dimensions

Flange-Flange

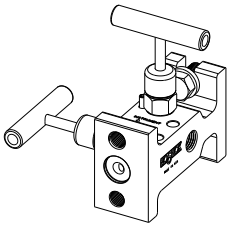

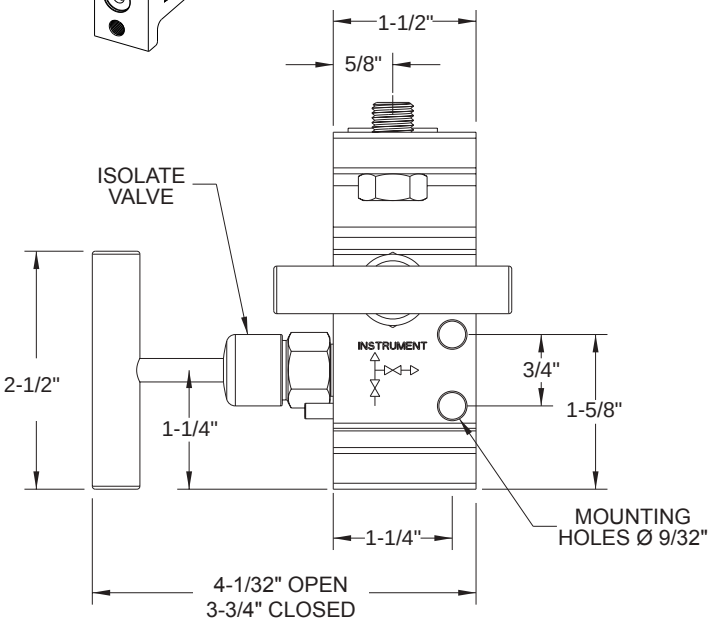

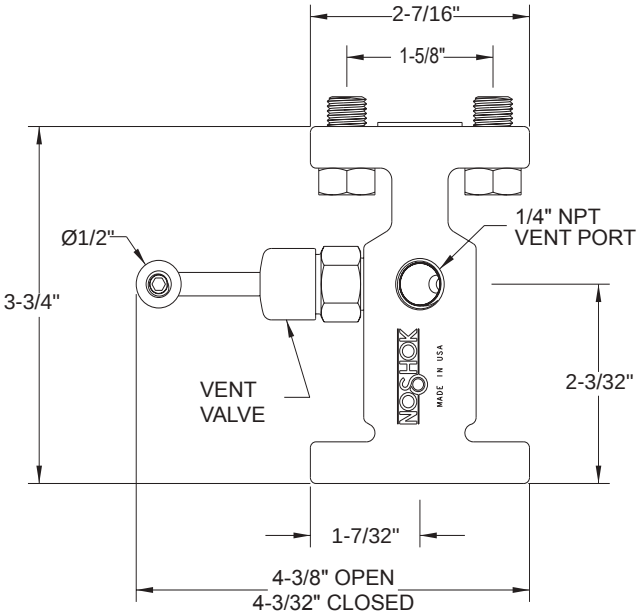

Flange-Female

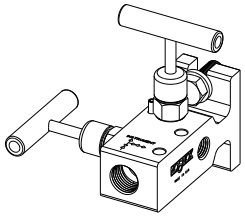

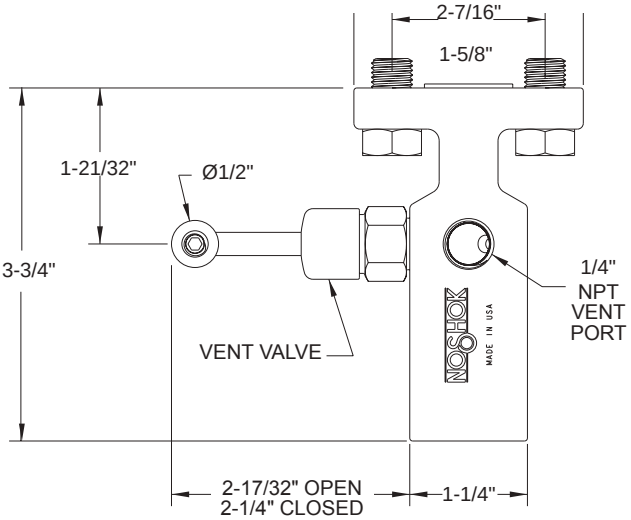

For panel mount or packing dimensions, see pg. 66.

Hard Seat

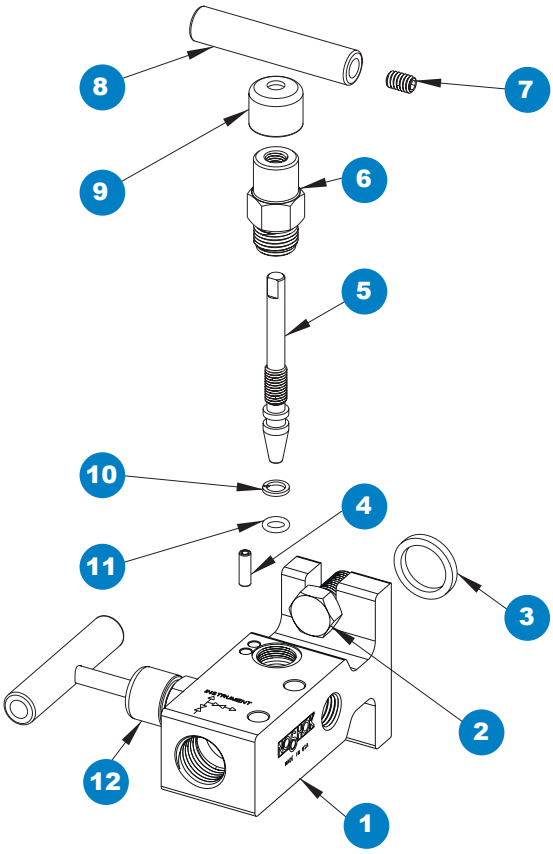

1 Valve body
2 Head bolt
3 Gasket ring
4 Slotted spring pin
5 Valve stem
6 Valve bonnet
7 Set screw
8 Valve “T” handle
9 Red dust cap
10 PTFE back-up ring
11 FKM o-ring
12 Blue dust cap

Soft Seat

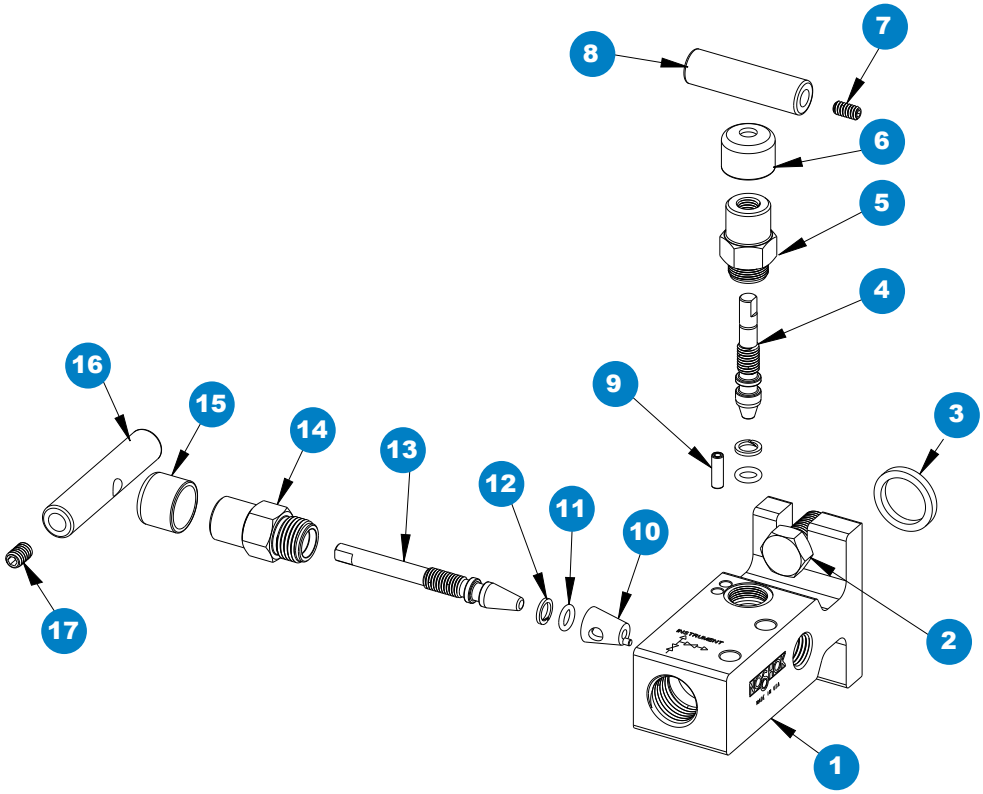

1 Valve body
2 Head bolt
3 Gasket ring
4 Soft tip valve stem
5 Valve bonnet
6 Red dust cap
7 Set screw
8 Valve “T” handle
9 Slotted spring pin
10 Acetal seat
11 FKM o-ring
12 PTFE back-up ring
13 Valve stem
14 Valve bonnet
15 Blue dust cap
16 Valve “T” handle
17 Set screw

Large Bore, Angle (0.375" Orifice)

2530 SERIES



- Designed for use with differential pressure transmitters incorporating two isolation valves in natural gas applications
- Non-rotating stem tip standard on large bore isolation valves
- 100% helium leak tested to 1 x 10^{-4} ml/s for performance and reliability
- Features a replaceable Acetal seat, and straight through porting for easy roddable cleaning of the block valves
- Blow-out proof stem provides a secondary stem seal in the full open position
- FKM o-ring seal and PTFE back-up ring below the stem threads to protect from corrosion and galling
- All stem threads are rolled for strength and ease of operation
- One-piece bonnet with a metal-to-metal seal to the valve body below the bonnet threads
- Slotted spring pin to prevent accidental loosening
- Color coded vinyl dust caps for bonnets and stems
- Rod Out Ports and Drain Ports are standard on the 90° Angle design

Flow Schematic

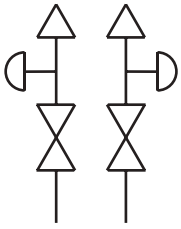

SPECIFICATIONS	
Materials	Zinc-Nickel plated Steel, electropolished 316 Stainless Steel*
Connections	Flange-flange 90° angle
Pressure ratings	6,000 psi @ 200 °F
Orifice size	0.375"
Flow coefficient	C_V 3.0
Stem seal & type	All 316 Stainless Steel stems with FKM o-ring and PTFE back-up ring below the threads
Additional features	Two static (test) ports, color coded vinyl bonnet and stem dust cap, patented soft tip stem design on equalizing and vent valves
Weight	Approximately 9.4 lb.

* All 316SS products meet the requirements of NACE MR0175/ISO 15156-3.

⚠ **WARNING:** This product can expose you to chemicals including Lead and Nickel, which are known to the State of California to cause cancer and birth defects or other reproductive harm. For more information go to www.P65Warnings.ca.gov

NOTE: All NOSHOK valve products conform to the MSS SP-99 instrument valves standards, and valves supplied with packing also conform to MSS SP-132 compression packing systems for instrument valves standard.

Adaptive Industrial Solutions | sales@adaptiveind.com | (877) 818-5009

SERIES	2	2-valve		
SEATS	5	Soft seat (0.375" orifice)		
PROCESS TYPE	3	Natural gas flow		
CONNECTIONS	0	1/2" NPT standard or flange		
VALVE TYPES	MMAC	Flange-Flange 90° Angle, Steel	MMAS	Flange-Flange 90° Angle, Stainless Steel

Please consult your local NOSHOK Distributor or NOSHOK, Inc. for availability and delivery information.

EXAMPLE

2 5 3 0 – MMAS

Series..... 2-valve
Seat.....Soft seat
Process type..... Natural gas flow
Connection.....1/2" NPT standard
Valve type..... Flange-flange 90° Angle, Stainless Steel

To meet all of your specific application requirements, the following **additional options** are available for these manifold valves. To order all or any of these options, simply add them to the part number as shown in the diagram below.

NOTE 1: The example shown includes ALL possible additional options. Please include ONLY the options required for your application when building your part number. (EXAMPLE: 2530-MMAS-PK1)

NOTE 2: When a packing option is selected, an o-ring option is NOT available.

ORDERING INFORMATION - ADDITIONAL OPTIONS						
SOFT SEATS	PK1	PEEK	KF1	PCTFE		
O-RINGS*	EM1	EPDM	KZ1	FFKM (Perfluoroelastomer)	NB1	NBR

Please consult your local NOSHOK Distributor or NOSHOK, Inc. for availability and delivery information.

* Other o-ring materials available on request.

Please note that the standard o-ring in all the NOSHOK valves is FKM and the standard handles are isolation “T” handles (HL8) and equalizing/vent 1-3/8" mini “T” handles (HL7).

The handle material will always match the material of the valve, unless otherwise specified. For example, the “T” handle on the 2530-MMAC will be Steel. When only the standard configuration is needed, no additional designations are necessary. Please consult the factory for special application requests.

EXAMPLE with Additional Options

2 5 3 0 – MMAS – PK1

Series..... 2-valve
Seat.....Soft seat
Process type..... Natural gas flow
Connection.....1/2" NPT
Valve type..... Flange-flange, Stainless Steel
Soft seat..... PEEK

Dimensions

Flange-Flange

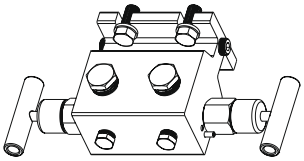

Top View

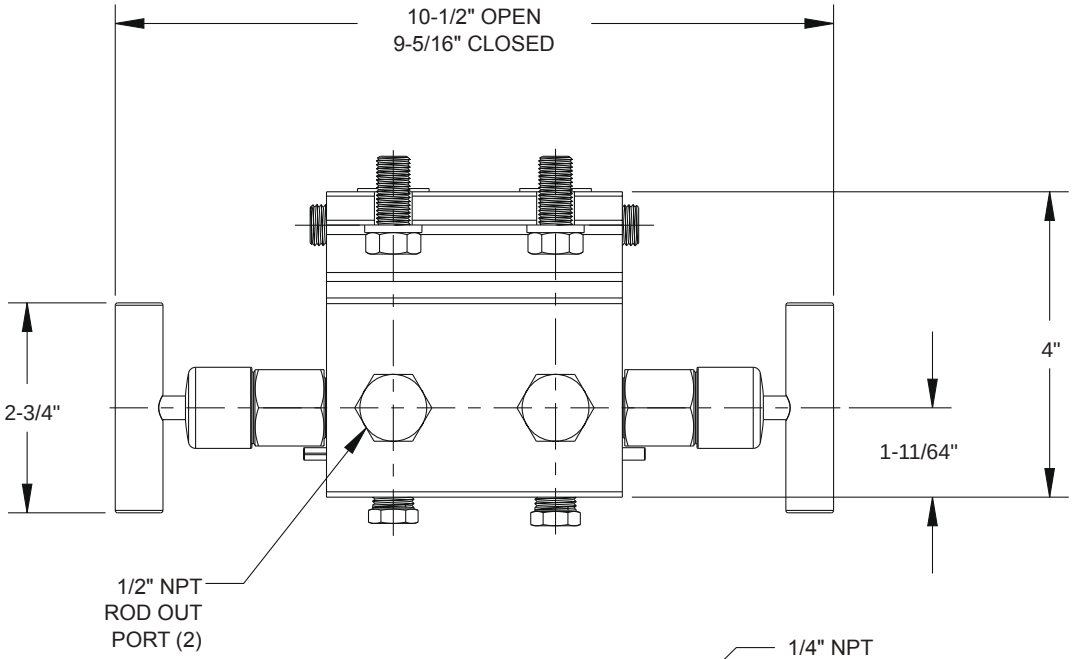

Front View

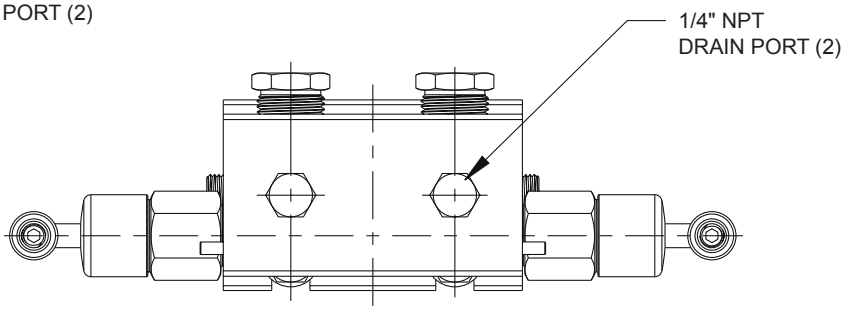

Side View

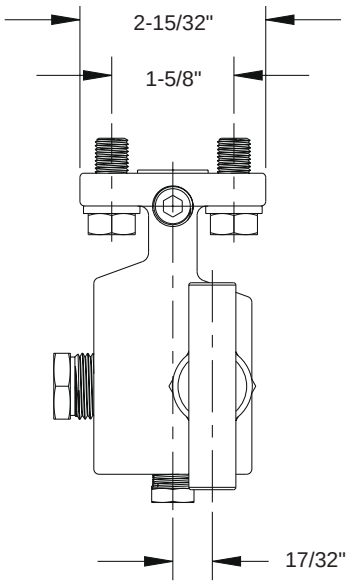

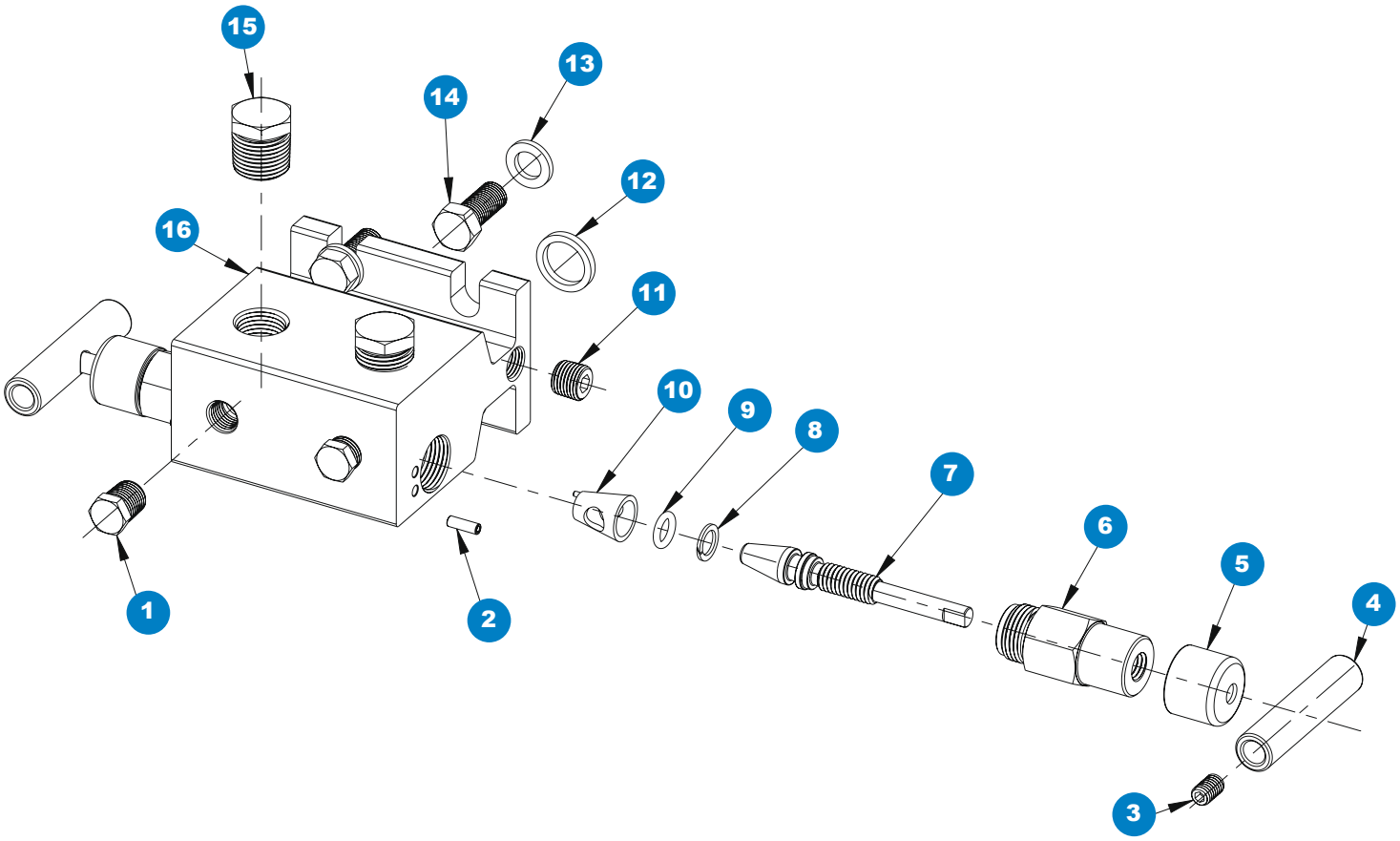

1 Plug
2 Slotted spring pin
3 Set screw
4 Valve“T” handle
5 Blue dust cap
6 Valve bonnet
7 Non-rotating stem
8 PTFE back-up ring
9 FKM o-ring
10 Acetal seat
11 Plug
12 Gasket ring
13 Flat washer
14 Head bolt
15 Plug
16 Valve body

Mini Block & Bleed, Hard Seat & Soft Tip (0.141" Orifice)

2602/2702 SERIES



- Combines isolating and venting in a single valve, eliminating the need for tubing and fittings
- Block valve isolates the downstream process fluids and the bleed valve exhausts upstream fluids enabling static pressure transmitters, switches or gauges to be removed without disturbing the permanent piping installation
- Valves are located on the top to fit into compact spaces and two holes are provided for mounting, venting is to the left
- 100% helium leak tested to 1 x 10^{-4} ml/s for performance and reliability
- Soft tip valves feature a patented Acetal non-rotating soft tip stem, and a back-up metal-to-metal seal **(U.S. Patent 6,820,857)**
- Blow-out proof stem provides a secondary stem seal in the full open position
- FKM o-ring seal and PTFE back-up ring below the stem threads to protect from corrosion and galling; PTFE or Graphite packing optional
- Stem and bonnet threads are rolled for strength and ease of operation
- One-piece bonnet with a metal-to-metal seal to the valve body below the bonnet threads
- Slotted spring pin to prevent accidental loosening
- Color coded vinyl dust caps for bonnets and stems (non-packing)
- Patented body-to-bonnet, metal-to-metal seal is designed to significantly increase the pressure range of the valve **(U.S. Patent 7,758,014)**

Flow Schematic

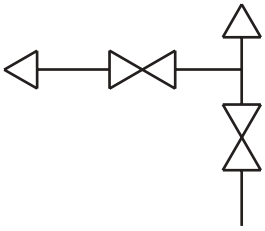

SPECIFICATIONS	
Materials	Zinc-Nickel plated Steel, electropolished 316 Stainless Steel*
Connections	1/4" NPT, 1/8" NPT, right venting optional
Pressure ratings**	Hard seat: 10,000 psi @ 200 °F Soft tip: 6,000 psi @ 200 °F
Orifice size	0.141"
Flow coefficient	Hard seat: C_V 0.38 Soft tip: C_V 0.38
Stem seal & type	All 316 Stainless Steel stems with FKM o-ring and PTFE back-up ring below the threads, PTFE or Graphite packing optional
Options	Panel mountings, o-ring materials, handles, packings, regulating stem and stem tips
Weight	Approximately 1.4 lb.

* All 316SS products meet the requirements of NACE MR0175/ISO 15156-3.
** If a packing option is chosen, maximum pressure rating is 6,000 psi.
Refer to the "Pressure vs. Temperature: Packing Style with Compatible Fluid" chart at the back of this catalog.

⚠ **WARNING:** This product can expose you to chemicals including Lead and Nickel, which are known to the State of California to cause cancer and birth defects or other reproductive harm. For more information go to www.P65Warnings.ca.gov

NOTE: All NOSHOK valve products conform to the MSS SP-99 instrument valves standards, and valves supplied with packing also conform to MSS SP-132 compression packing systems for instrument valves standard.

Adaptive Industrial Solutions | sales@adaptiveind.com | (877) 818-5009

SERIES	2	2-valve		
SEATS	6	Hard seat	7	Soft tip
PROCESS TYPE	0	Static pressure		
CONNECTIONS	1	1/8" NPT	2	1/4" NPT
VALVE TYPES	FFC	Female-Female, Steel	FFCR	Female-Female, Steel, Right Vent
	FFS	Female-Female, Stainless Steel	FFSR	Female-Female, Stainless Steel, Right Vent

Please consult your local NOSHOK Distributor or NOSHOK, Inc. for availability and delivery information.

EXAMPLE **2 6 0 2 – FFC**

Series.....2-valve
Seat.....Hard seat
Process type..... Static pressure
Connection.....1/4" NPT
Valve type..... Female-female, Steel

To meet all of your specific application requirements, the following **additional options** are available for these manifold valves. To order all or any of these options, simply add them to the part number as shown in the diagram below.

NOTE 1: The example shown includes ALL possible additional options. Please include ONLY the options required for your application when building your part number. (EXAMPLE: 2602-FFC-P1)

NOTE 2: When a packing option is selected, an o-ring option is NOT available.

ORDERING INFORMATION - ADDITIONAL OPTIONS								
PACKINGS†	P1	PTFE	P2	Graphite**				
STEM TIPS	T1	Non-rotating (316 Stainless)	T4	PEEK***	T7	Ball (ceramic)**	T10	Regulating Acetal***
	T2	Acetal (Acetal)***	T5	Ball (440C Stainless)**	T8	Ball (Monel)**	T11	Regulating PCTFE***
	T3	PCTFE***	T6	Ball (carbide)**	T9	Non-rotating regulating (316 Stainless)**	T12	Regulating PEEK***
O-RINGS*	EM1	EPDM	KZ1	FFKM (Perfluoroelastomer)	NB1	NBR		
HANDLES	HL3	1" Round knurled						

Please consult your local NOSHOK Distributor or NOSHOK, Inc. for availability and delivery information.

† If a packing option is chosen, maximum pressure rating is 6,000 psi. Refer to the "Pressure vs. Temperature: Packing Style with Compatible Fluid" chart at the back of this catalog.
* Other o-ring materials available on request.
** Hard seat only.
*** Soft tip only.

Please note that the standard o-ring in all the NOSHOK valves is FKM and the standard handles are isolation 1-3/8" mini “T” handles (HL7) and equalizing 1-3/8" mini “T” handles (HL7).

The handle material will always match the material of the valve, unless otherwise specified. For example, the 1-3/8" mini “T” handle (HL7) on the 2602-FFC will be Steel. When only the standard configuration is needed, no additional designations are necessary. Please consult the factory for special application requests.

EXAMPLE with Additional Options **2 6 0 2 – FFC – P1**

Series..... 2-valve
Seat..... Hard seat
Process type..... Static pressure
Connection.....1/4" NPT
Valve type.....Female-female, Steel
Packing.....PTFE

Dimensions

Female-Female

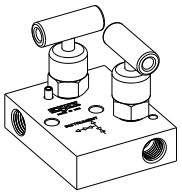

Top View

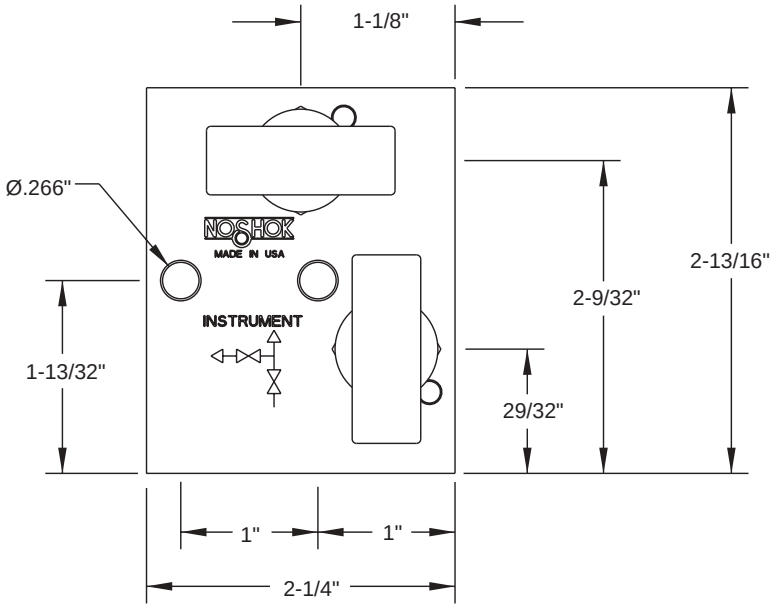

Front View

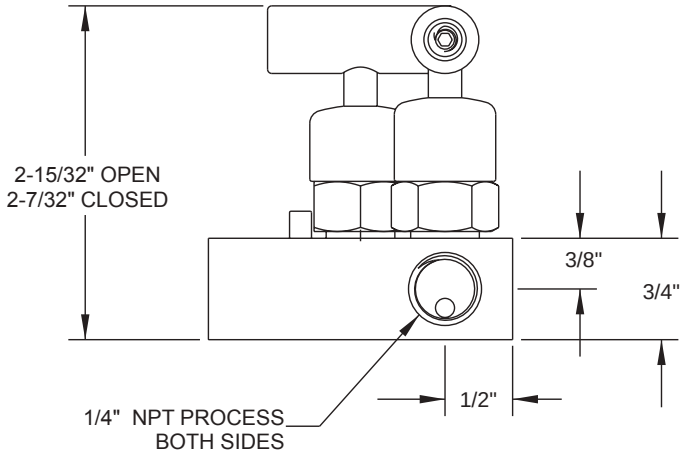

Side View

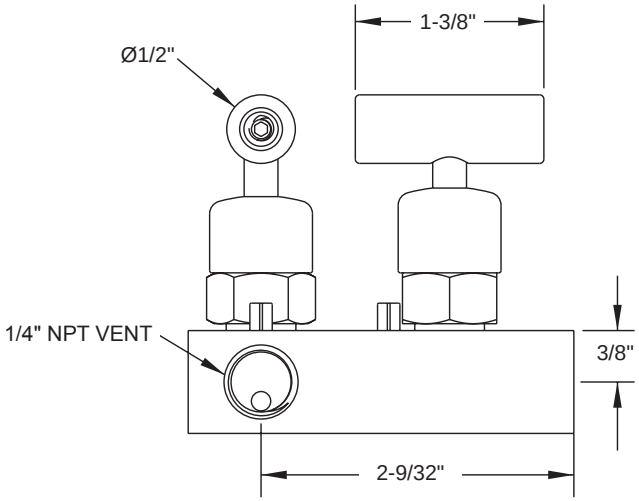

For panel mount or packing dimensions, see pg. 66.

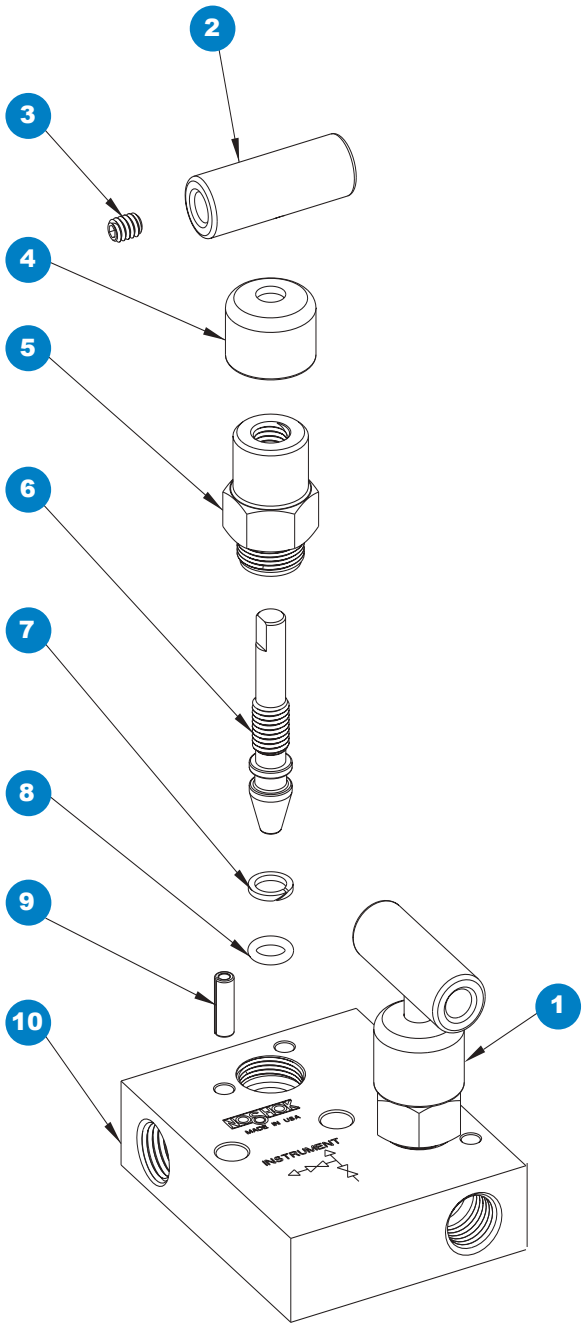

1 Blue dust cap
2 Mini valve “T” handle
3 Set screw
4 Red dust cap
5 Mini valve bonnet
6 Soft tip stem or mini valve stem
7 PTFE back-up ring
8 FKM o-ring
9 Slotted spring pin
10 Valve body

Block & Bleed, Hard & Soft Tip (0.156" Orifice)

2603/2703 SERIES
2604/2704 SERIES



Note: Packing option shown.
HL2 handles shown,
HL1 is standard.

- Combines isolating and venting in a single valve, eliminating the need for tubing and fittings
- Block valve isolates the downstream process fluids and the bleed valve exhausts upstream fluids enabling static pressure transmitters, switches or gauges to be removed without disturbing the permanent piping installation
- Block valve is located on the right and the bleed valve is located on top in a 90° orientation, venting is to the left
- 100% helium leak tested to 1 x 10^{-4} ml/s for performance and reliability
- Soft tip valves feature a patented Acetal non-rotating soft tip stem, and a back-up metal-to-metal seal **(U.S. Patent 6,820,857)**
- Blow-out proof stem provides a secondary stem seal in the full open position
- FKM o-ring seal and PTFE back-up ring below the stem threads to protect from corrosion and galling; PTFE or Graphite packing optional
- All stem threads are rolled for strength and ease of operation
- One-piece bonnet with a metal-to-metal seal to the valve body below the bonnet threads
- Slotted spring pin to prevent accidental loosening
- Color coded vinyl dust caps for bonnets and stems (non-packing)
- Patented body-to-bonnet, metal-to-metal seal is designed to significantly increase the pressure range of the valve **(U.S. Patent 7,758,014)**

Flow Schematic

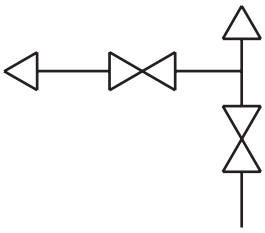

SPECIFICATIONS	
Materials	Zinc-Nickel plated Steel, electropolished 316 Stainless Steel*
Connections	2603/2703 Series: 3/8" NPT 2604/2704 Series: 1/2" NPT, right venting optional
Pressure ratings**	Hard seat: 10,000 psi @ 200 °F Soft tip: 6,000 psi @ 200 °F
Orifice size	0.156"
Flow coefficient	C_V 0.44
Stem seal & type	All 316 Stainless Steel stems with FKM o-ring and PTFE back-up ring below the threads, PTFE or Graphite packing optional
Options	Panel mountings, o-ring materials, handles, packings, regulating stem and stem tips
Weight	Approximately 2.2 lb.

* All 316SS products meet the requirements of NACE MR0175/ISO 15156-3.
** If a packing option is chosen, maximum pressure rating is 6,000 psi. Refer to the "Pressure vs. Temperature: Packing Style with Compatible Fluid" chart at the back of this catalog.

⚠ **WARNING:** This product can expose you to chemicals including Lead and Nickel, which are known to the State of California to cause cancer and birth defects or other reproductive harm. For more information go to www.P65Warnings.ca.gov

NOTE: All NOSHOK valve products conform to the MSS SP-99 instrument valves standards, and valves supplied with packing also conform to MSS SP-132 compression packing systems for instrument valves standard.

Adaptive Industrial Solutions | sales@adaptiveind.com | (877) 818-5009

SERIES	2	2-valve		
SEATS	6	Hard seat	7	Soft tip
PROCESS TYPE	0	Static pressure		
CONNECTIONS	3	3/8" NPT	4	1/2" NPT
VALVE TYPES	FFC	Female-Female, Steel	FFCR	Female-Female, Steel, Right Vent
	FFS	Female-Female, Stainless Steel	FFSR	Female-Female, Stainless Steel, Right Vent

Please consult your local NOSHOK Distributor or NOSHOK, Inc. for availability and delivery information.

EXAMPLE **2 7 0 4 – FFC**

Series.....2-valve
Seat..... Soft tip
Process type ..... Static pressure
Connection.....1/2" NPT
Valve type..... Female-female, Steel

To meet all of your specific application requirements, the following **additional options** are available for these manifold valves. To order all or any of these options, simply add them to the part number as shown in the diagram below.

NOTE 1: The example shown includes ALL possible additional options. Please include ONLY the options required for your application when building your part number. (EXAMPLE: 2704-FFC-P1)

NOTE 2: When a packing option is selected, an o-ring option is NOT available.

NOTE 3: The standard o-ring in all the NOSHOK manifold valves is FKM.

ORDERING INFORMATION - ADDITIONAL OPTIONS								
PACKINGS†	P1	PTFE	P2	Graphite**				
STEM TIPS	T1	Non-rotating (316 Stainless)**	T4	PEEK***	T7	Ball (ceramic)**	T10	Regulating Acetal***
	T2	Acetal (Acetal)***	T5	Ball (440C Stainless)**	T8	Ball (Monel)**	T11	Regulating PCTFE***
	T3	PTCFE***	T6	Ball (carbide)**	T9	Non-rotating regulating (316 Stainless)**	T12	Regulating PEEK***
O-RINGS*	EM1	EPDM	KZ1	FFKM (Perfluoroelastomer)	NB1	NBR		
HANDLES	HL2	2-1/2" "T"	HL4	1-3/8" Phenolic				
	HL3	1" Round knurled	HL5	1-3/4" Phenolic				

Please consult your local NOSHOK Distributor or NOSHOK, Inc. for availability and delivery information.

† If a packing option is chosen, maximum pressure rating is 6,000 psi. Refer to the "Pressure vs. Temperature: Packing Style with Compatible Fluid" chart at the back of this catalog.
* Other o-ring materials available on request.
** Hard seat only.
*** Soft tip only.

Please note that the standard o-ring in all the NOSHOK valves is FKM and the standard handles are block "T" handle (HL2) and bleed 1-3/8" mini "T" handle (HL7).

The handle material will always match the material of the valve, unless otherwise specified. For example, the mini "T" handle (HL1) on the 2704-FFC will be Steel. When only the standard configuration is needed, no additional designations are necessary. Please consult the factory for special application requests.

EXAMPLE with Additional Options **2 7 0 4 – FFC – P1**

Series..... 2-valve
Seat.....Soft tip
Process type.....Static pressure
Connection..... 1/2" NPT
Valve type.....Female-female, Steel
Packing.....PTFE

Dimensions

Female-Female

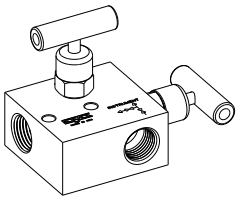

Top View

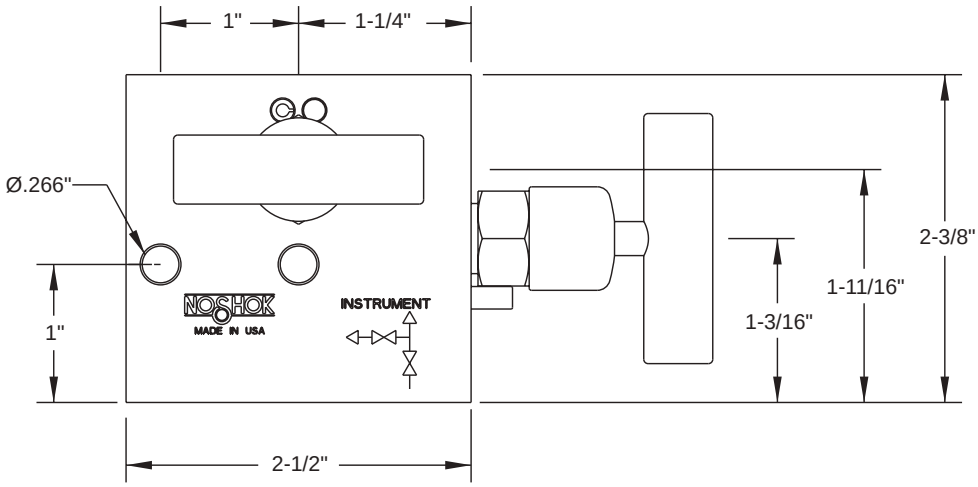

Front View

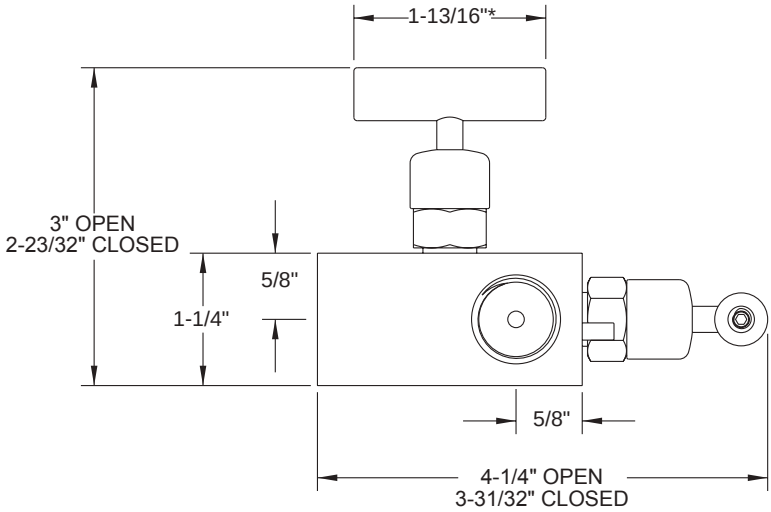

* 1-3/8" for soft tip versions

Side View

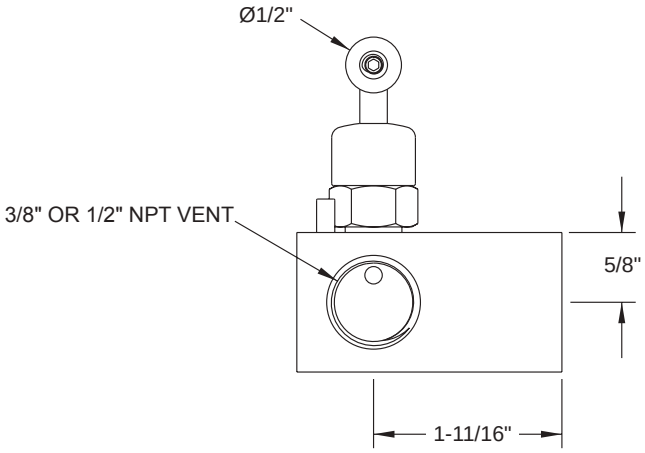

For panel mount or packing dimensions, see pg. 66.

Hard Seat

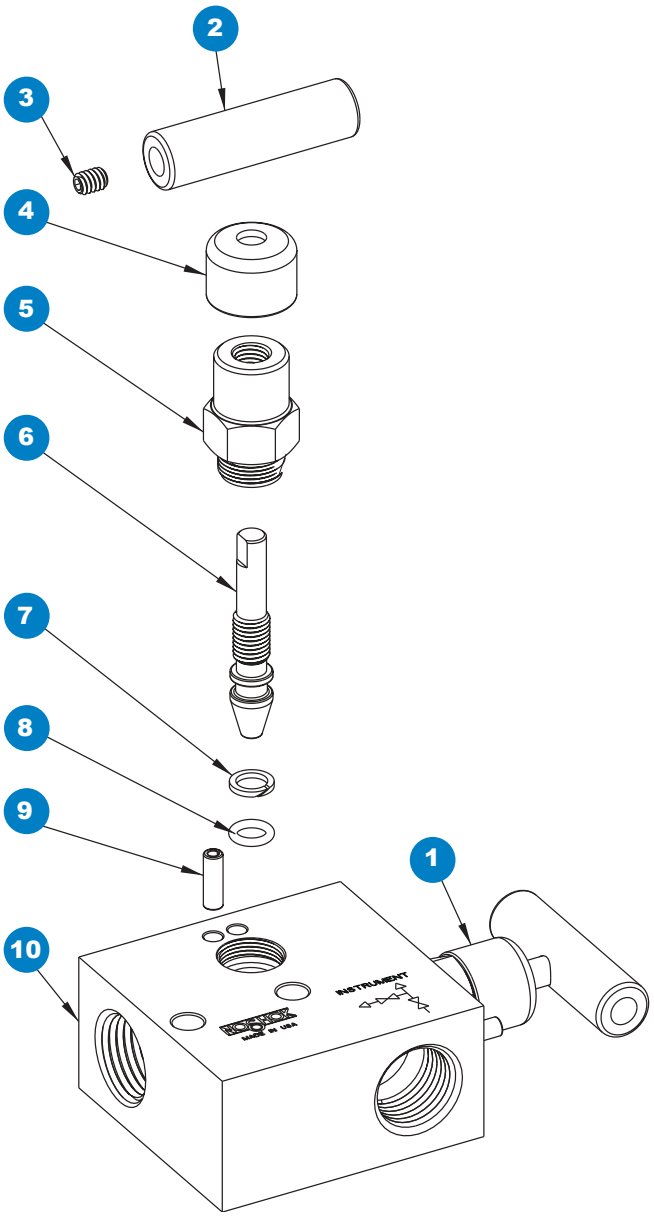

1 Blue dust cap
2 Mini valve “T” handle
3 Set screw
4 Red dust cap
5 Mini valve bonnet
6 Mini valve stem
7 PTFE back-up ring
8 FKM o-ring
9 Slotted spring pin
10 Valve body

Soft Tip

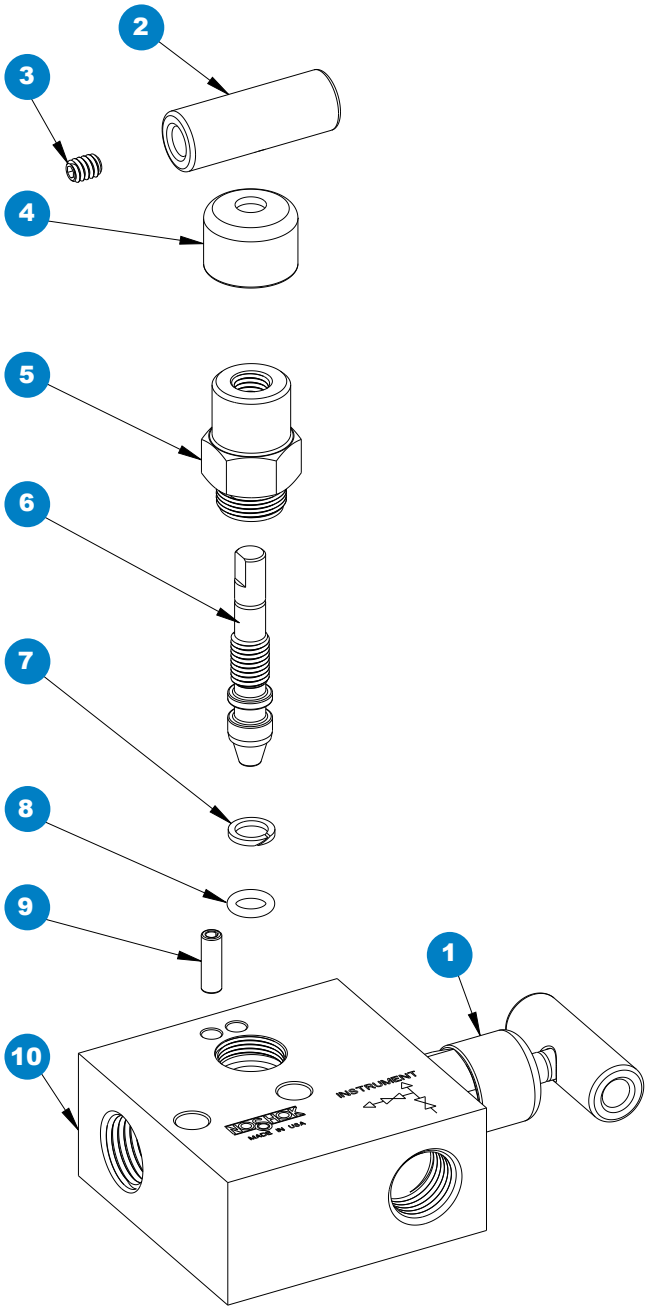

1 Blue dust cap
2 Mini valve “T” handle
3 Set screw
4 Red dust cap
5 Mini valve bonnet
6 Soft tip stem
7 PTFE back-up ring
8 FKM o-ring
9 Slotted spring pin
10 Valve body

Chart Recorder Manifold, Soft Seat

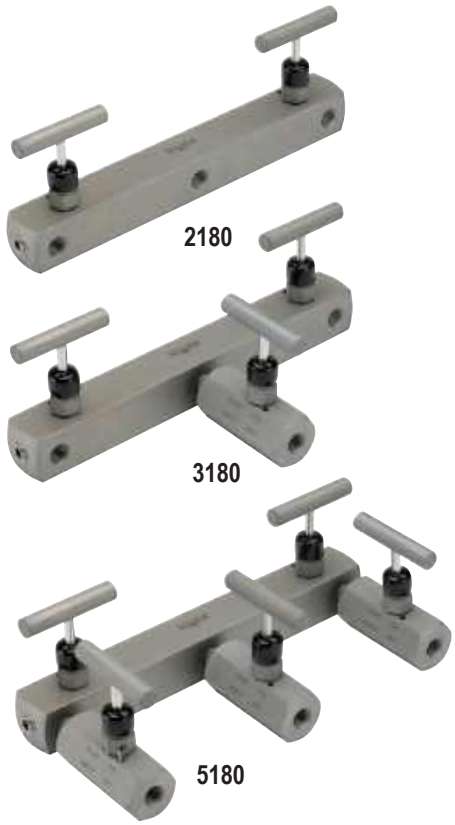

2180 SERIES

- Designed for use with chart recorders
- 100% helium leak tested to 1 x 10^{-4} ml/s for performance and reliability
- Replaceable Acetal seat and straight through porting for bidirectional, high capacity flow and easy roddable cleaning
- Blow-out proof stem provides a secondary stem seal in the full open position
- FKM o-ring seal and PTFE back-up ring below the stem threads to protect from corrosion and galling; PTFE packing optional
- All stem threads are rolled for strength and ease of operation
- One-piece bonnet with a metal-to-metal seal to the valve body below the bonnet threads
- Slotted spring pin to prevent accidental loosening
- Vinyl dust caps for bonnets and stems (non-packing)

Flow Schematics

2-Valve

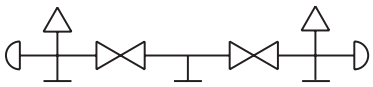

3-Valve

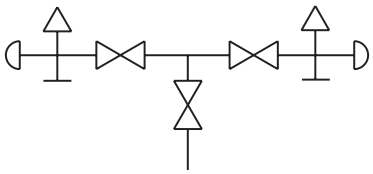

5-Valve

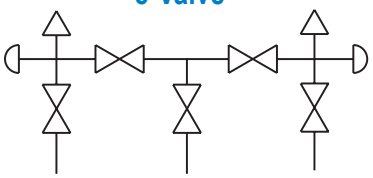

SPECIFICATIONS	
Materials	Zinc-Nickel plated Steel, electropolished 316 Stainless Steel*
Connection	1/4" NPT
Pressure rating	6,000 psi @ 200 °F
Orifice size	0.187"
Flow coefficient	C_V 0.76
Stem seal & type	All 316 Stainless Steel stems with FKM o-ring and PTFE back-up ring below the threads, PTFE packing optional
Options	Panel mountings, o-ring materials, handles, packings, regulating stem and stem tips
Weight	Approximately 4.8 lb. (2-valve model)

* All 316SS products meet the requirements of NACE MR0175/ISO 15156-3.

⚠ **WARNING:** This product can expose you to chemicals including Lead and Nickel, which are known to the State of California to cause cancer and birth defects or other reproductive harm. For more information go to www.P65Warnings.ca.gov

NOTE: All NOSHOK valve products conform to the MSS SP-99 instrument valves standards, and valves supplied with packing also conform to MSS SP-132 compression packing systems for instrument valves standard.

ORDERING INFORMATION						
SERIES	2	2-valve	3	3-valve	5	5-valve
SEAT	1	Soft seat				
PROCESS TYPE	8	Meter manifold				
CONNECTION	0	1/4" NPT				
VALVE TYPES	FFC	Female-Female, Steel	FFS	Female-Female, Stainless Steel		

Please consult your local NOSHOK Distributor or NOSHOK, Inc. for availability and delivery information.

EXAMPLE **2 1 8 0 – FFC**

Series..... 2-valve
Seat.....Soft seat
Process type..... Meter manifold
Connection..... 1/4" NPT
Valve type.....Female-female, Steel

To meet all of your specific application requirements, the following **additional options** are available for these manifold valves. To order all or any of these options, simply add them to the part number as shown in the diagram below.

NOTE 1: The example shown includes ALL possible additional options. Please include ONLY the options required for your application when building your part number. (EXAMPLE: 2180-FFC-P1)

NOTE 2: When a packing option is selected, an o-ring option is NOT available.

NOTE 3: The standard o-ring in all the NOSHOK manifold valves is FKM.

ORDERING INFORMATION - ADDITIONAL OPTIONS						
PACKINGS	P1	PTFE				
STEM TIP	T1	Non-rotating (316 Stainless)				
O-RINGS*	EM1	EPDM	KZ1	FFKM (Perfluoroelastomer)	NB1	NBR
HANDLES	HL3	1" Round knurled	HL4	1-3/8" Phenolic	HL5	1-3/4" Phenolic

Please consult your local NOSHOK Distributor or NOSHOK, Inc. for availability and delivery information.

* Other o-ring materials available on request.

Please note that the standard o-ring in all the NOSHOK valves is FKM and the standard handles are “T” handles (HL2).

The handle material will always match the material of the valve, unless otherwise specified. For example, the “T” handle (HL2) on the 2180-FFC will be Steel. When only the standard configuration is needed, no additional designations are necessary. Please consult the factory for special application requests.

EXAMPLE with Additional Options **2 1 8 0 – FFC – P1**

Series..... 2-valve
Seat.....Soft seat
Process type..... Meter manifold
Connection..... 1/4" NPT
Valve type.....Female-female, Steel
Packing.....PTFE

Dimensions

Female-Female

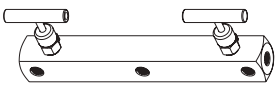

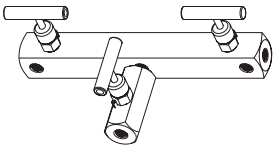

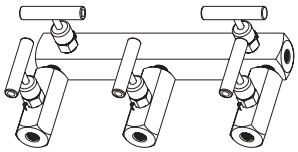

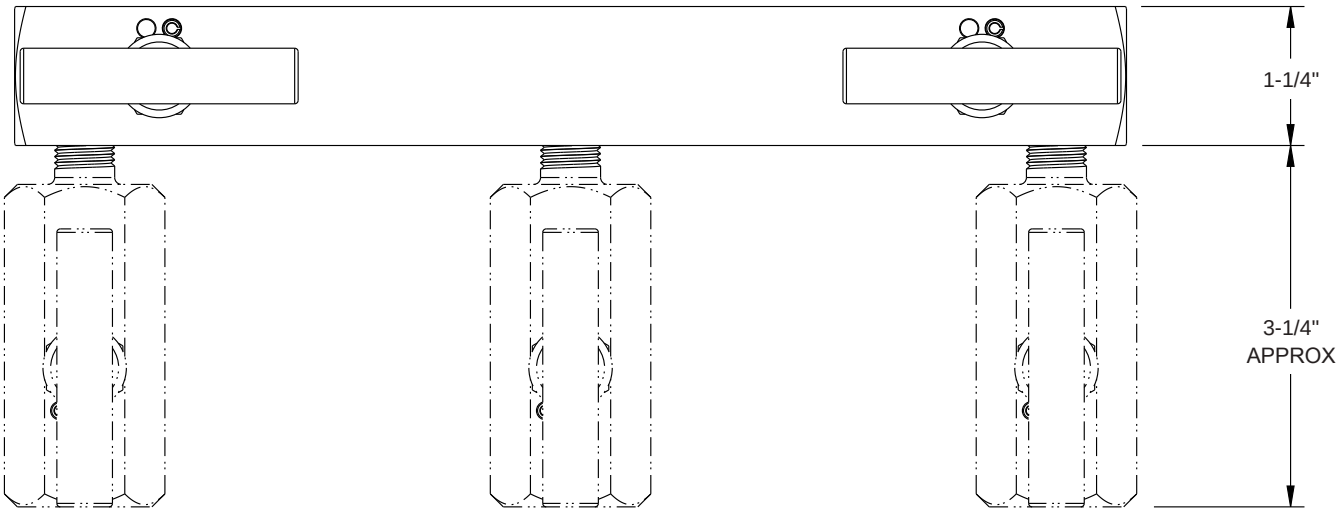

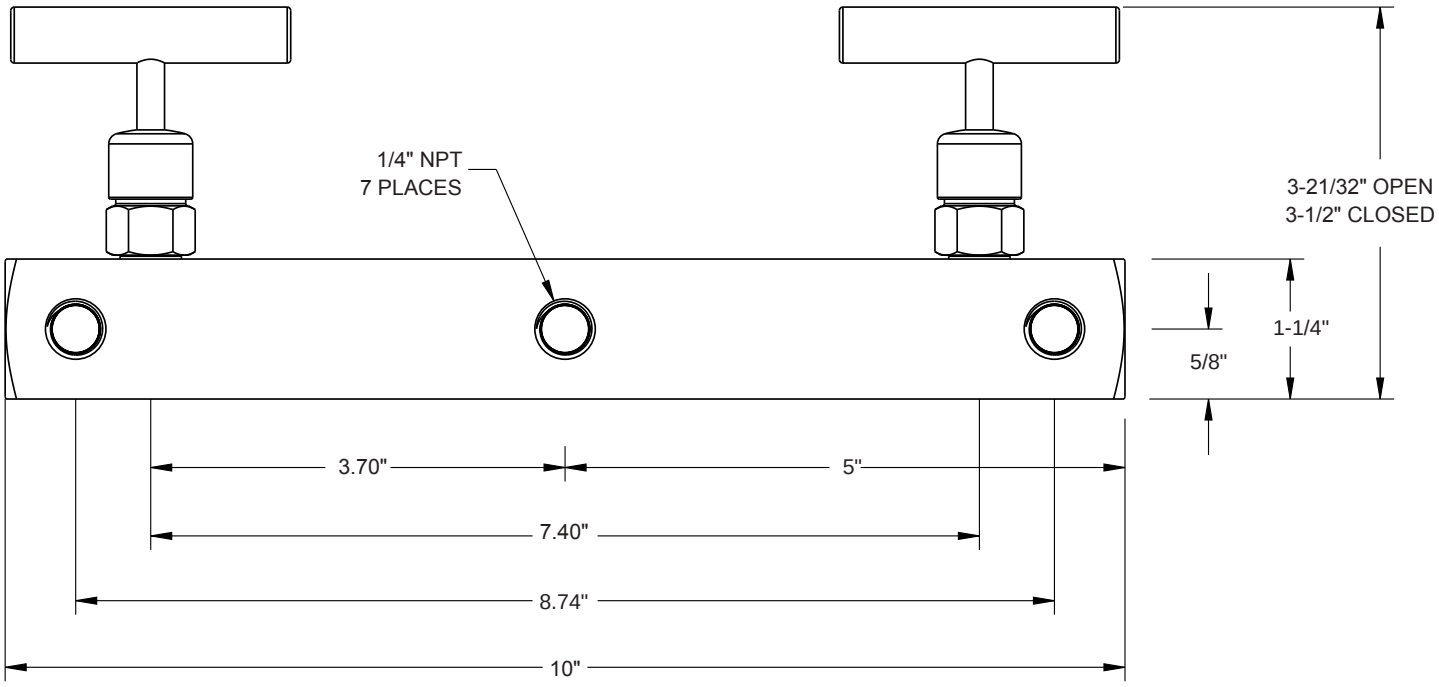
1/4" NPT
7 PLACES
3-21/32" OPEN
3-1/2" CLOSED
1-1/4"
5/8"
3.70"
5"
7.40"
8.74"
10"

Hard Seat & Soft Seat

3010/3110 SERIES

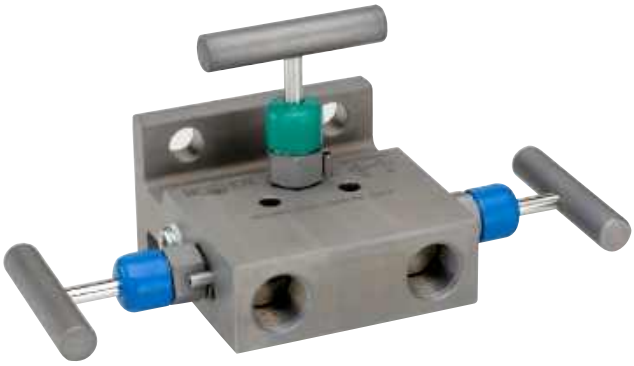

- Available in block, single flange, or double flange connection for remote or direct installation
- Designed for use with differential pressure transmitters incorporating two isolation valves and an equalizing valve in differential pressure measurement
- 3110 Series soft seat valves also feature a replaceable Acetal seat, and straight through porting for bidirectional, high capacity flow and easy roddable cleaning
- Blow-out proof stem provides a secondary stem seal in the full open position
- FKM o-ring seal and PTFE back-up ring below the stem threads to protect from corrosion and galling; PTFE or Graphite packing optional
- All stem threads are rolled for strength and ease of operation
- One-piece bonnet with a metal-to-metal seal to the valve body below the bonnet threads
- Slotted spring pin to prevent accidental loosening
- Color coded vinyl dust caps for bonnets and stems (non-packing)

Flow Schematic

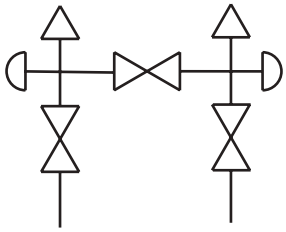

SPECIFICATIONS	
Materials	Zinc-Nickel plated Steel, electropolished 316 Stainless Steel*
Connection	Flange-flange, 1/2" NPT-flange, 1/2" NPT-1/2" NPT
Pressure ratings**	Hard seat: 10,000 psi @ 200 °F Soft seat: 6,000 psi @ 200 °F
Orifice size	0.187"
Flow coefficient	Hard seat: C_V 0.44 Soft seat: C_V 0.76
Stem seal & type	All 316 Stainless Steel stems with FKM o-ring and PTFE back-up ring below the threads, PTFE or Graphite packing optional
Options	Panel mountings, o-ring materials, handles, packings, regulating stem and stem tips
Weight	Approximately 4.0 lb. without flange, Approximately 5.0 lb. with flange

* All 316SS products meet the requirements of NACE MR0175/ISO 15156-3.
** If a packing option is chosen, maximum pressure rating is 6,000 psi. Refer to the "Pressure vs. Temperature: Packing Style with Compatible Fluid" chart at the back of this catalog.

⚠ **WARNING:** This product can expose you to chemicals including Lead and Nickel, which are known to the State of California to cause cancer and birth defects or other reproductive harm. For more information go to www.P65Warnings.ca.gov

NOTE: All NOSHOK valve products conform to the MSS SP-99 instrument valves standards, and valves supplied with packing also conform to MSS SP-132 compression packing systems for instrument valves standard.

Adaptive Industrial Solutions | sales@adaptiveind.com | (877) 818-5009

SERIES	**3**	3-valve				
SEATS	**0**	Hard seat	**1**	Soft seat		
PROCESS TYPE	**1**	Differential pressure				
CONNECTION	**0**	1/2" NPT standard or flange				
VALVE TYPES	**MFC**	Flange-Female, Steel	**MFS**	Flange-Female, Stainless Steel	**MMC**	Flange-Flange, Steel
	FFC	Female-Female, Steel	**FFS**	Female-Female, Stainless Steel	**MMS**	Flange-Flange, Stainless Steel

Please consult your local NOSHOK Distributor or NOSHOK, Inc. for availability and delivery information.

EXAMPLE

3 1 1 0 – MFC

Series..... 3-valve
Seat.....Soft seat
Process type.....Differential pressure
Connection..... 1/2" NPT standard or flange
Valve type.....Flange-female, Steel

To meet all of your specific application requirements, the following **additional options** are available for these manifold valves. To order all or any of these options, simply add them to the part number as shown in the diagram below.

NOTE 1: The example shown includes ALL possible additional options. Please include ONLY the options required for your application when building your part number. (EXAMPLE: 3110-MFC-P1)

NOTE 2: When a packing option is selected, an o-ring option is NOT available.

NOTE 3: The standard o-ring in all the NOSHOK manifold valves is FKM and T1 hard non-rotating (316SS standard) stem tip is the only option available on the 3110 Series soft seat version.

ORDERING INFORMATION - ADDITIONAL OPTIONS						
SOFT SEATS* **	**PK1**	PEEK	**KF1**	PCTFE		
PACKINGS†	**P1**	PTFE	**P2**	Graphite**		
STEM TIPS	**T1**	Non-rotating (316 Stainless)	**T6**	Ball (carbide)**	**T8**	Ball (Monel)**
	T5	Ball (440C Stainless)**	**T7**	Ball (ceramic)**	**T9**	Non-rotating regulating (316 Stainless)**
O-RINGS*	**EM1**	EPDM	**KZ1**	FFKM (Perfluoroelastomer)	**NB1**	NBR
HANDLES	**HL1**	1-13/16" Mini "T"	**HL4**	1-3/8" Phenolic		
	HL3	1" Round knurled	**HL5**	1-3/4" Phenolic		

Please consult your local NOSHOK Distributor or NOSHOK, Inc. for availability and delivery information.

† If a packing option is chosen, maximum pressure rating is 6,000 psi. Refer to the "Pressure vs. Temperature: Packing Style with Compatible Fluid" chart at the back of this catalog.

* Other o-ring materials available on request.

** For 3010 only.

Please note that the standard o-ring in all the NOSHOK valves is FKM and the standard handles are "T" handles (HL2).

The handle material will always match the material of the valve, unless otherwise specified. For example, the "T" handle (HL2) on the 3110-MFC will be Steel. When only the standard configuration is needed, no additional designations are necessary. Please consult the factory for special application requests.

EXAMPLE with Additional Options

3 1 1 0 – MFC – PK1 – P1 – T1

Series..... 3-valve
Seat.....Soft seat
Process type.....Differential pressure
Connection..... 1/2" NPT standard or flange
Valve type.....Flange-female, Steel
Soft seat ..... PEEK
Packing.....PTFE
Stem tip ..... Non-rotating

Dimensions

Flange-Flange

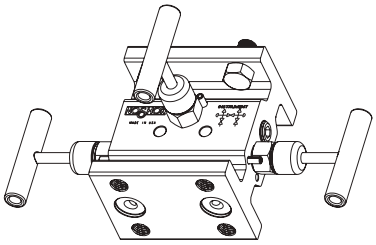

Top View

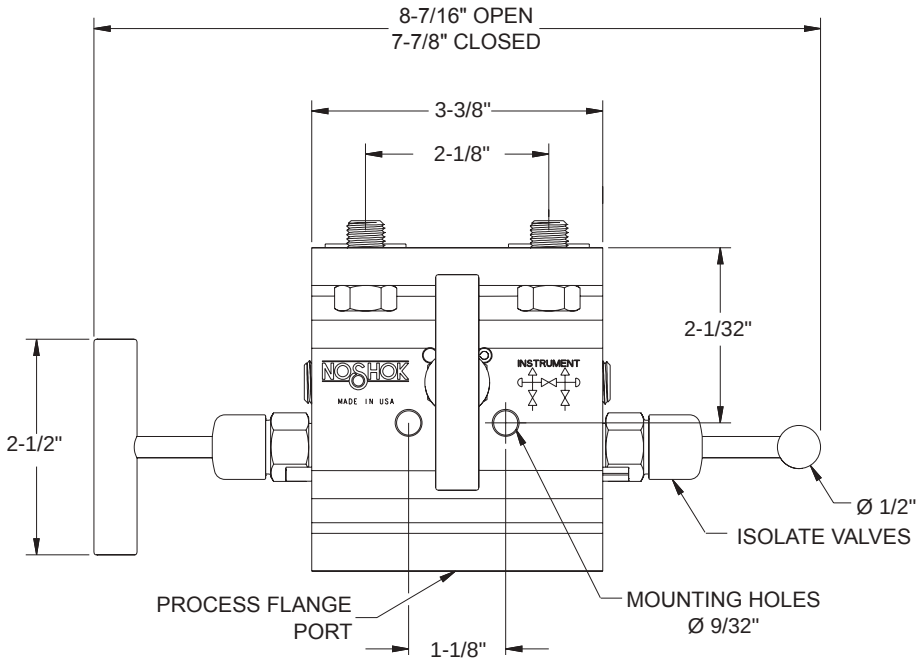

Side View

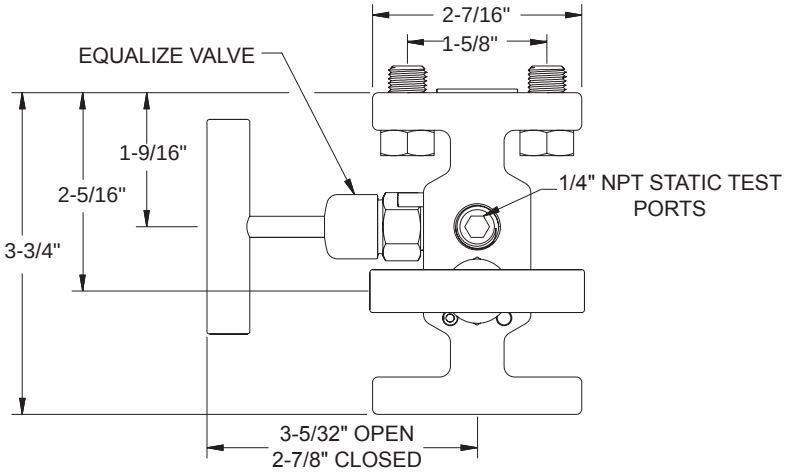

Flange-Female

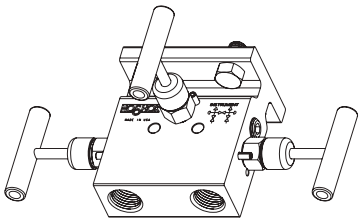

Top View

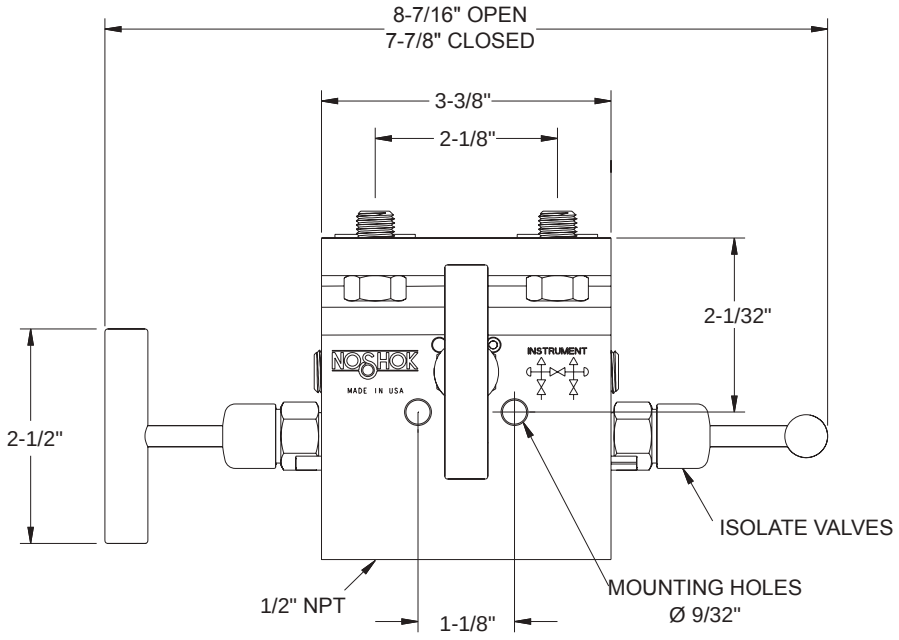

Side View

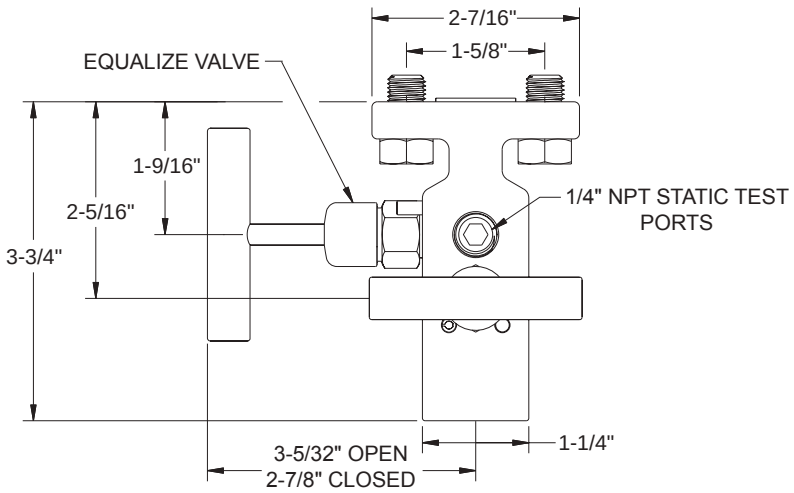

Dimensions

Female-Female

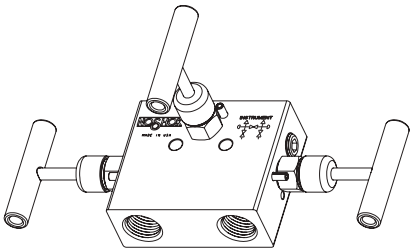

Top View

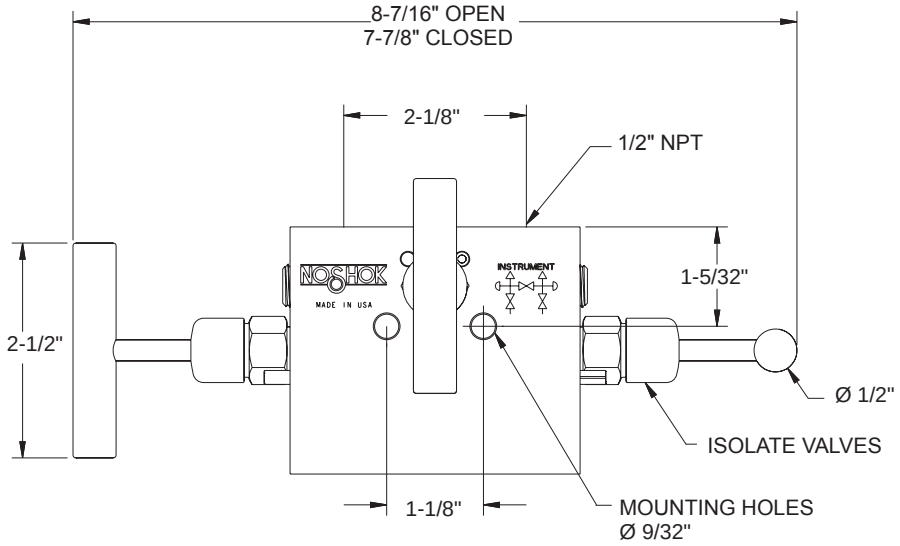

Side View

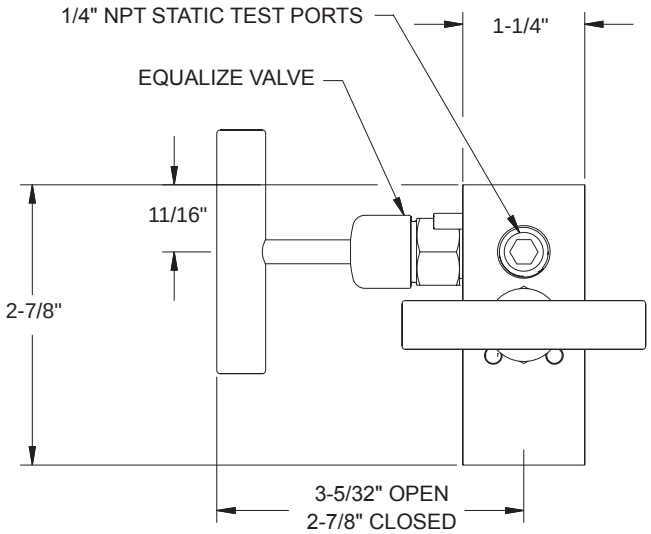

For panel mount or packing dimensions, see pg. 66.

Hard Seat

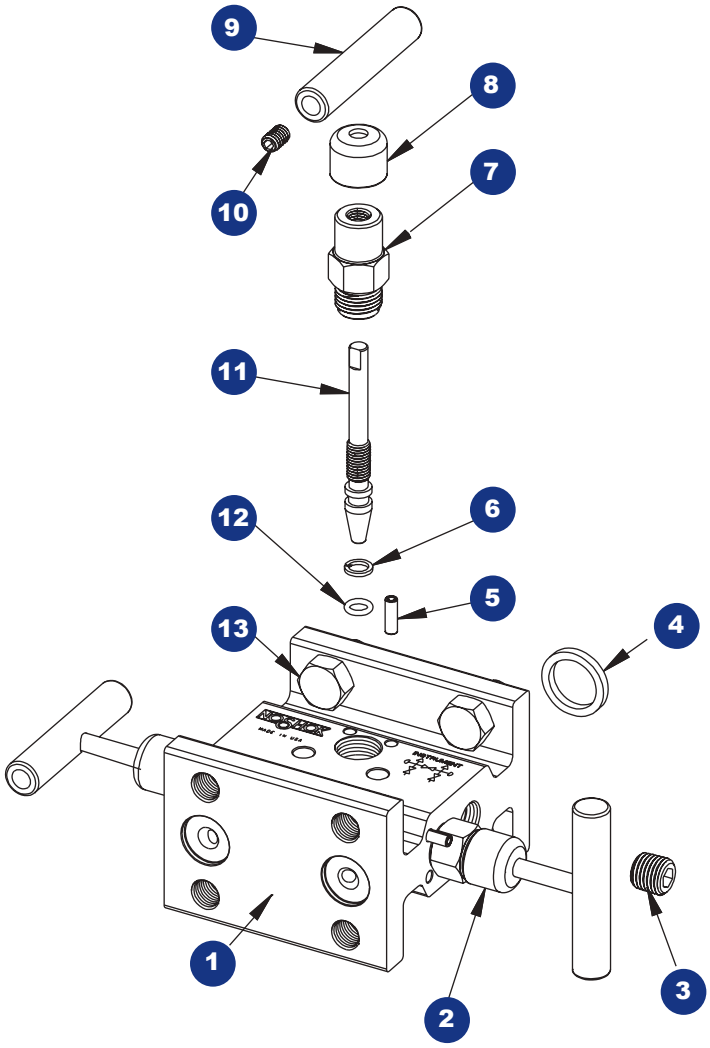

1 Valve body
2 Blue dust cap
3 Plug
4 Gasket ring
5 Slotted spring pin
6 PTFE back-up ring
7 Valve bonnet
8 Green dust cap
9 Valve "T" handle
10 Set screw
11 Valve stem
12 FKM o-ring
13 Head bolt

Soft Seat

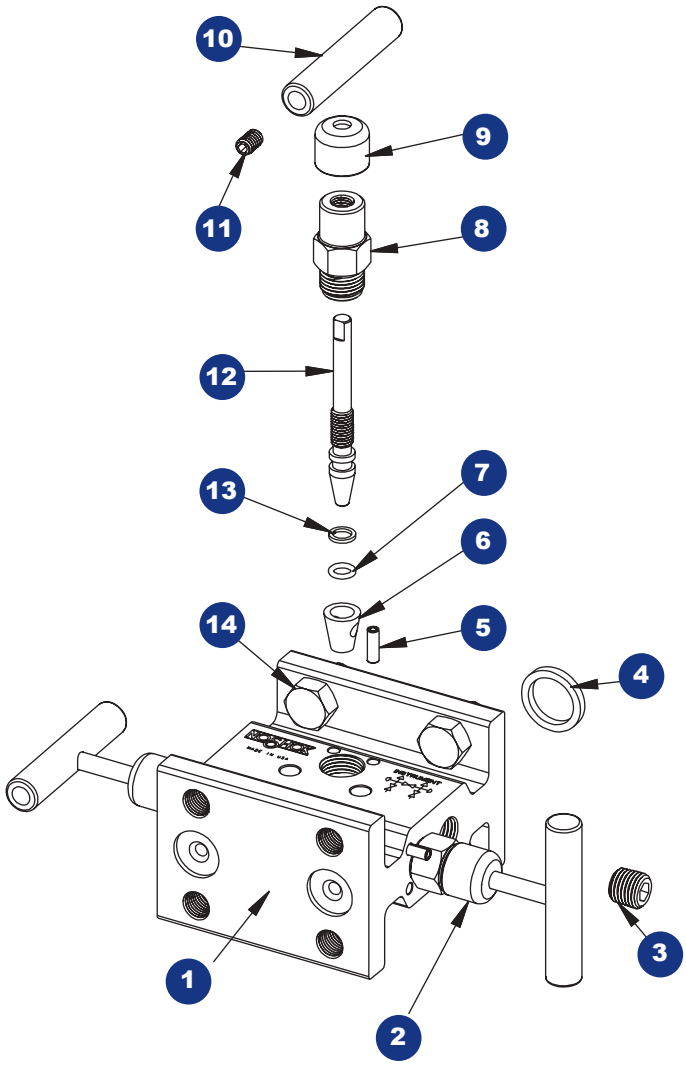

1 Valve body
2 Blue dust cap
3 Plug
4 Gasket ring
5 Slotted spring pin
6 Acetal seat
7 FKM o-ring
8 Valve bonnet
9 Green dust cap
10 Valve "T" handle
11 Set screw
12 Valve stem
13 PTFE back-up ring
14 Head bolt

Compact Style Hard Seat

3040 SERIES





- Compact style manifold is designed for use with differential pressure transmitters incorporating two isolation valves and an equalizing valve in differential pressure measurement
- 100% helium leak tested to 1 x 10-4 ml/s for guaranteed performance and reliability
- Blow-out proof stem provides a secondary stem seal in the full open position
- FKM o-ring seal and PTFE back-up ring below the stem threads to protect from corrosion and galling; PTFE or Graphite packing optional
- All stem threads are rolled for strength and ease of operation
- One-piece bonnet with a metal-to-metal seal to the valve body below the bonnet threads
- Slotted spring pin to prevent accidental loosening
- Labeled and color coded vinyl dust caps for bonnets and stems

Flow Schematic

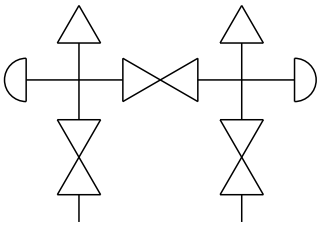

SPECIFICATIONS	
Materials	Electropolished 316 Stainless Steel*
Connection	1/2" NPT-flange
Pressure ratings	6,000 psi @ 200 °F
Orifice size	0.125"
Flow coefficient	C_V 0.30
Stem seal & type	All 316 Stainless Steel stems with FKM o-ring and PTFE back-up ring below the threads, PTFE or Graphite packing optional
Options	Packings, regulating stem and stem tips o-ring materials and handles
Additional features	Bleed plugs installed in static test ports
Weight	Approximately 4.4 lb.

* All 316SS products meet the requirements of NACE MR0175/ISO 15156-3.

⚠ **WARNING:** This product can expose you to chemicals including Lead and Nickel, which are known to the State of California to cause cancer and birth defects or other reproductive harm. For more information go to www.P65Warnings.ca.gov

NOTE: All NOSHOK valve products conform to the MSS SP-99 instrument valves standards, and valves supplied with packing also conform to MSS SP-132 compression packing systems for instrument valves standard.

Adaptive Industrial Solutions | sales@adaptiveind.com | (877) 818-5009

ORDERING INFORMATION				
SERIES	3	3-valve		
SEATS	0	Hard seat		
PROCESS TYPE	4	Compact style, differential pressure		
CONNECTION	0	1/2" NPT standard		
VALVE TYPES	MFS	Flange-Female, Stainless Steel (MSS SP-99 spacing)	MFS-CP	Flange-Female, Stainless Steel (Coplanar™ spacing)

Please consult your local NOSHOK Distributor or NOSHOK, Inc. for availability and delivery information.

EXAMPLE

3040 – MFS-CP

Series..... 3-valve
Seat..... Hard seat
Process type.....Compact style, differential pressure
Connection.....1/2" NPT standard
Valve type.....Flange-female, Stainless Steel, Coplanar™ spacing

To meet all of your specific application requirements, the following **additional options** are available for these manifold valves. To order all or any of these options, simply add them to the part number as shown in the diagram below.

NOTE 1: The example shown includes ALL possible additional options. Please include ONLY the options required for your application when building your part number. (EXAMPLE: 3040-MFS-P1)

NOTE 2: When a packing option is selected, an o-ring option is NOT available.

ORDERING INFORMATION - ADDITIONAL OPTIONS						
PACKINGS	P1	PTFE	P2	Graphite		
STEM TIPS	T1	Non-rotating (316 Stainless)	T6	Ball (carbide)	T8	Ball (Monel)
	T5	Ball (440C Stainless)	T7	Ball (ceramic)	T9	Non-rotating regulating (316 Stainless)
O-RINGS*	EM1	EPDM	KZ1	FFKM (Perfluoroelastomer)	NB1	NBR

Please consult your local NOSHOK Distributor or NOSHOK, Inc. for availability and delivery information.

* Other o-ring materials available on request.

EXAMPLE with Additional Options

3040 – MFS – P1 – T1

Series..... 3-valve
Seat..... Hard seat
Process type..... Compact style, differential pressure
Connection..... 1/2" NPT standard
Valve type..... Flange-female, Stainless Steel
Packing.....PTFE
Stem tip ..... Non-rotating

Adaptive Industrial Solutions | sales@adaptiveind.com | (877) 818-5009

Dimensions

Flange-Female MSS SP-99 Spacing

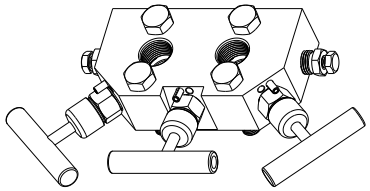

Bottom View

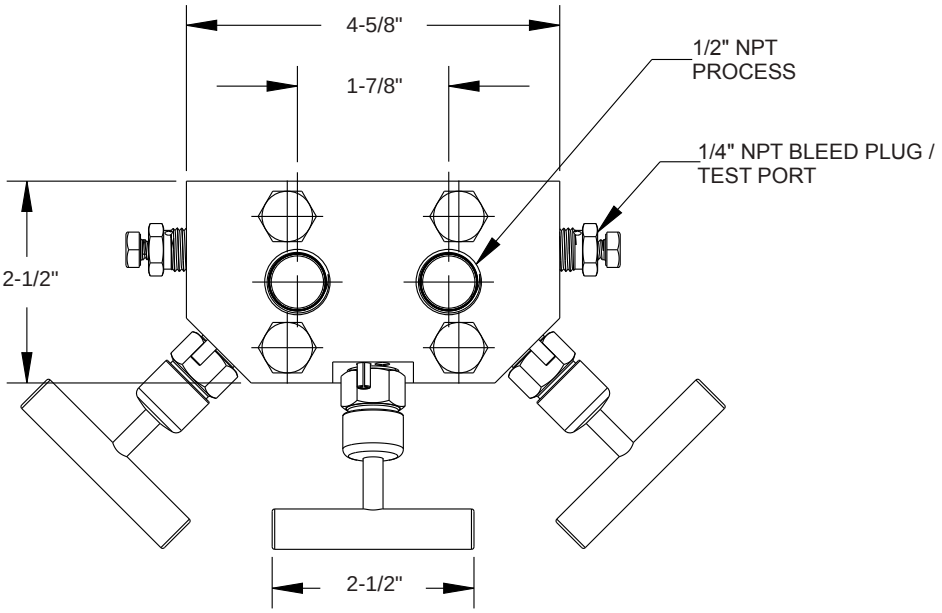

Top View

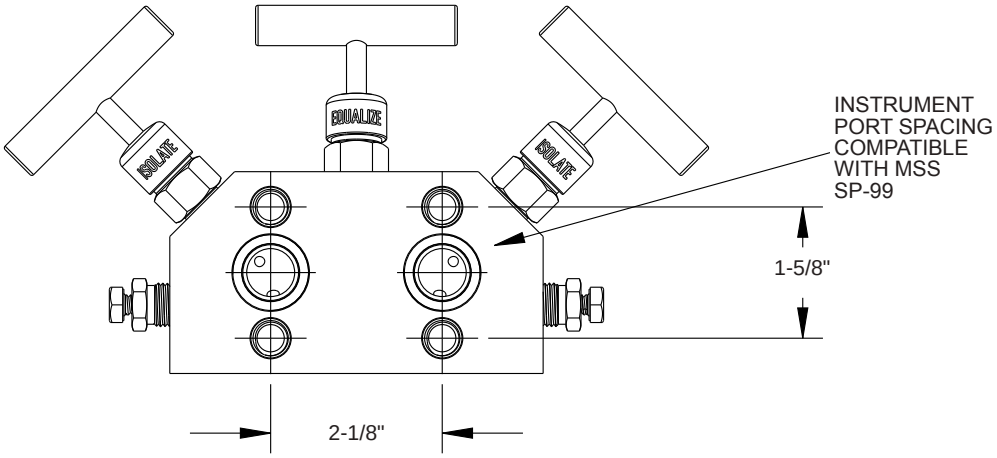

Front View

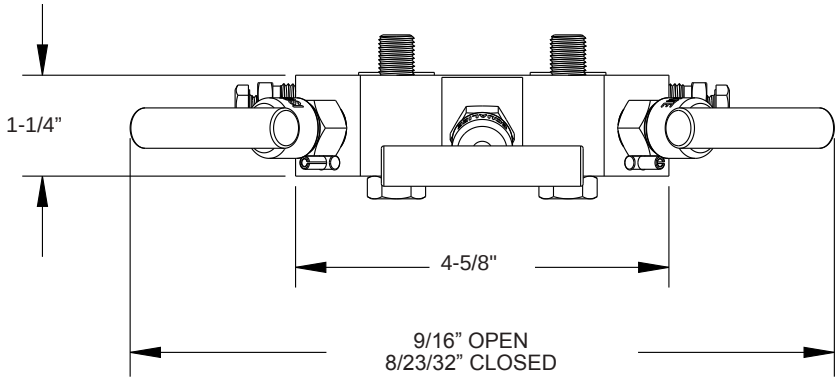

Flange-Female Coplanar™ Spacing

Note: All dimensions are the same as the SP-99 spacing except for the top view shown below.

Top View

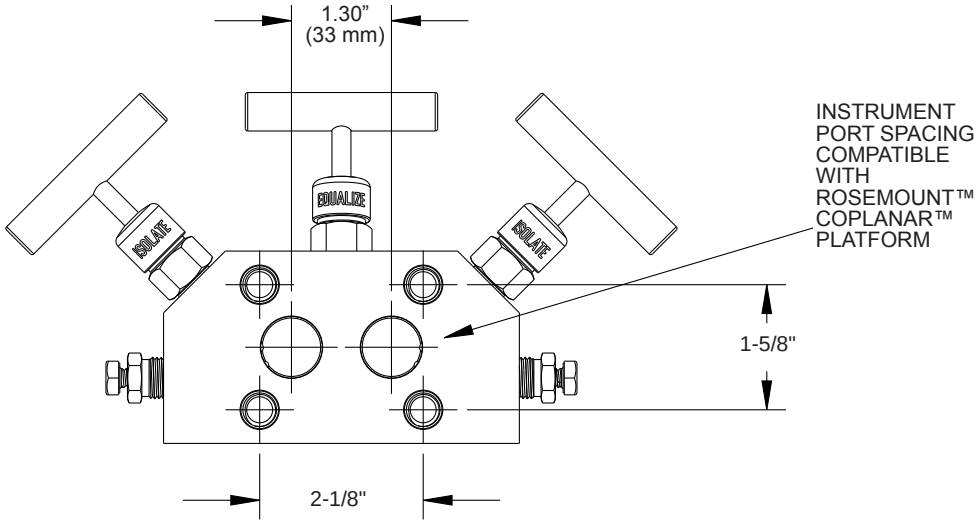

Flange-Female

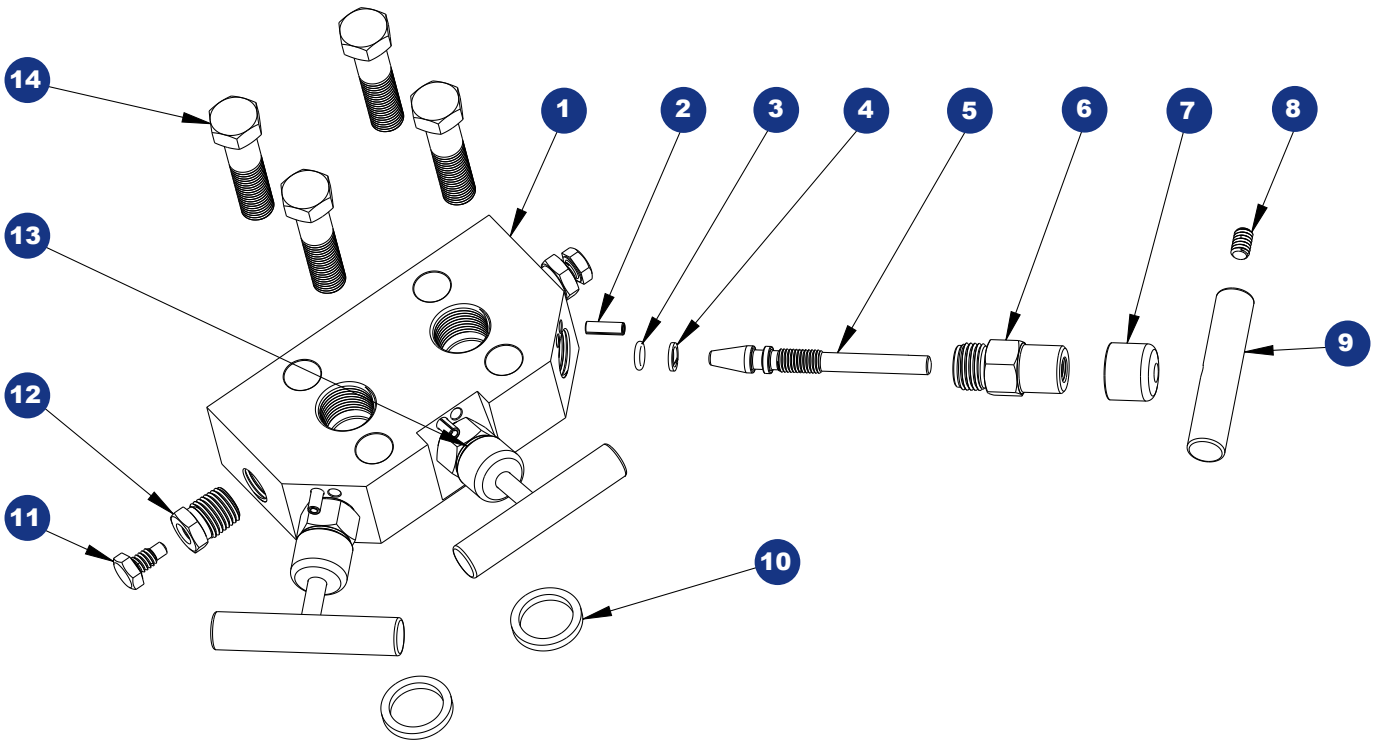

1 Valve body
2 Slotted spring pin
3 FKM o-ring
4 PTFE back-up ring
5 Valve stem
6 Valve bonnet
7 Blue dust cap
8 Set screw
9 Valve "T" handle
10 Gasket ring
11 Bleed screw
12 Bleed plug
13 Green dust cap
14 Head bolt

Soft Seat (0.375" Orifice)

3510 SERIES



- Designed for use with differential pressure transmitters incorporating two isolation valves and an equalizing valve in differential pressure measurement
- Available in block, single flange, or double flange connection for remote or direct installation
- 100% helium leak tested to 1 x 10^{-4} ml/s for performance and reliability
- Features a replaceable Acetal seat, and straight through porting for bidirectional, high capacity flow and easy roddable cleaning
- Blow-out proof stem provides a secondary stem seal in the full open position
- FKM o-ring seal and PTFE back-up ring below the stem threads to protect from corrosion and galling
- All stem threads are rolled for strength and ease of operation
- One-piece bonnet with a metal-to-metal seal to the valve body below the bonnet threads
- Slotted spring pin to prevent accidental loosening
- Color coded vinyl dust caps for bonnets and stems
- Non-rotating stem tip standard on isolation valves

Flow Schematic

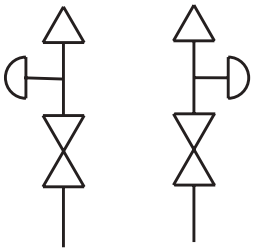

SPECIFICATIONS	
Materials	Zinc-Nickel plated Steel, electropolished 316 Stainless Steel*
Connection	Flange-flange, 1/2" NPT-flange, 1/2" NPT-1/2" NPT
Pressure ratings	6,000 psi @ 200 °F
Orifice size	0.375"
Flow coefficient	C_V 3.0
Stem seal & type	All 316 Stainless Steel stems with FKM o-ring and PTFE back-up ring below the threads
Options	Panel mountings, o-ring materials, handles, packings, regulating stem and stem tips
Weight	Approximately 6.5 lb.

* All 316SS products meet the requirements of NACE MR0175/ISO 15156-3.

⚠ **WARNING:** This product can expose you to chemicals including Lead and Nickel, which are known to the State of California to cause cancer and birth defects or other reproductive harm. For more information go to www.P65Warnings.ca.gov

NOTE: All NOSHOK valve products conform to the MSS SP-99 instrument valves standards, and valves supplied with packing also conform to MSS SP-132 compression packing systems for instrument valves standard.

Adaptive Industrial Solutions | sales@adaptiveind.com | (877) 818-5009

SERIES	**3**	3-valve			
SEAT	**5**	Soft seat, 0.375" orifice			
PROCESS TYPE	**1**	Differential pressure			
CONNECTION	**0**	1/2" NPT standard or flange			
VALVE TYPES	**MFC**	Flange-Female, Steel	**MFS**	Flange-Female, Stainless Steel	**MMC** Flange-Flange, Steel
	FFC	Female-Female, Steel	**FFS**	Female-Female, Stainless Steel	**MMS** Flange-Flange, Stainless Steel

Please consult your local NOSHOK Distributor or NOSHOK, Inc. for availability and delivery information.

EXAMPLE **3 5 1 0 – MFC**

Series.....3-valve
Seat..... Soft seat
Process type..... Differential pressure
Connection..... 1/2" NPT standard or flange
Valve type..... Flange-female, Steel

To meet all of your specific application requirements, the following **additional options** are available for these manifold valves. To order all or any of these options, simply add them to the part number as follows:

ORDERING INFORMATION - ADDITIONAL OPTIONS						
SOFT SEATS	**PK1**	PEEK	**KF1**	PCTFE		
O-RINGS*	**EM1**	EPDM	**KZ1**	FFKM (Perfluoroelastomer)	**NB1**	NBR
HANDLES	**HL3**	1" Round knurled	**HL4**	1-3/8" Phenolic	**HL5**	1-3/4" Phenolic

Please consult your local NOSHOK Distributor or NOSHOK, Inc. for availability and delivery information.

* Other o-ring materials available on request.

Please note that the standard o-ring in all the NOSHOK valves is FKM and the standard handles are isolation “T” handles (HL8) and equalizing “T” handles (HL2).

The handle material will always match the material of the valve, unless otherwise specified. For example, the “T” handle on the 3510-MFC will be Steel. When only the standard configuration is needed, no additional designations are necessary. Please consult the factory for special application requests.

EXAMPLE with Additional Options **3 5 1 0 – MFC – PK1 – KZ1**

Series.....3-valve
Seat..... Soft seat
Process type..... Differential pressure
Connection..... 1/2" NPT standard or flange
Valve type..... Flange-female, Steel
Soft seat.....PEEK
O-ring.....FFKM

Dimensions

Flange-Flange

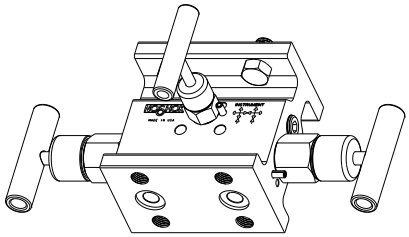

Top View

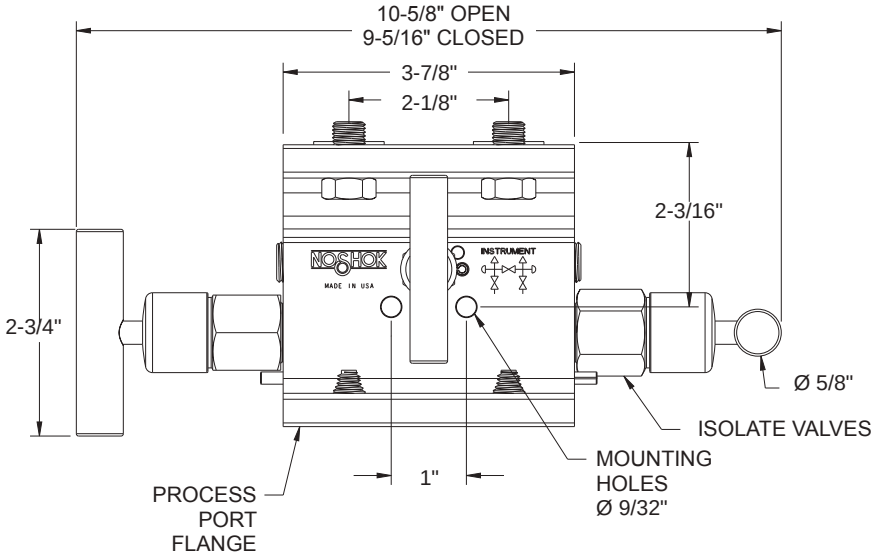

Side View

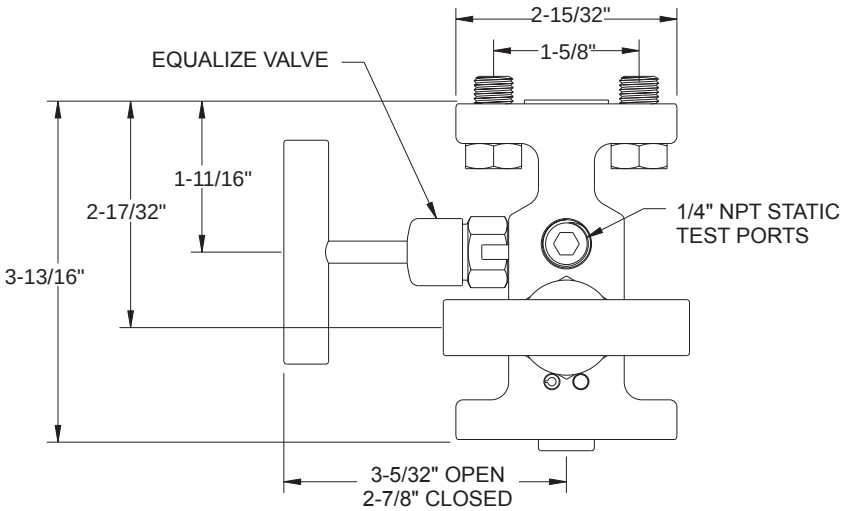

Flange-Female

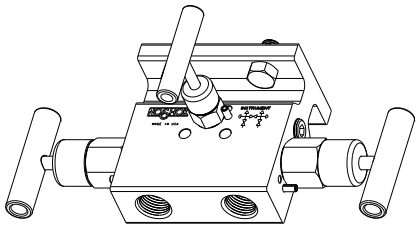

Top View

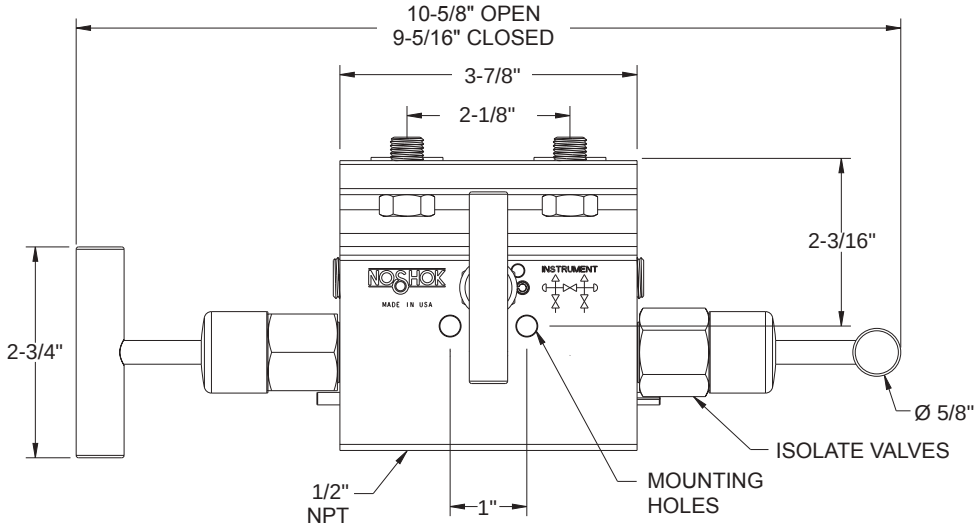

Side View

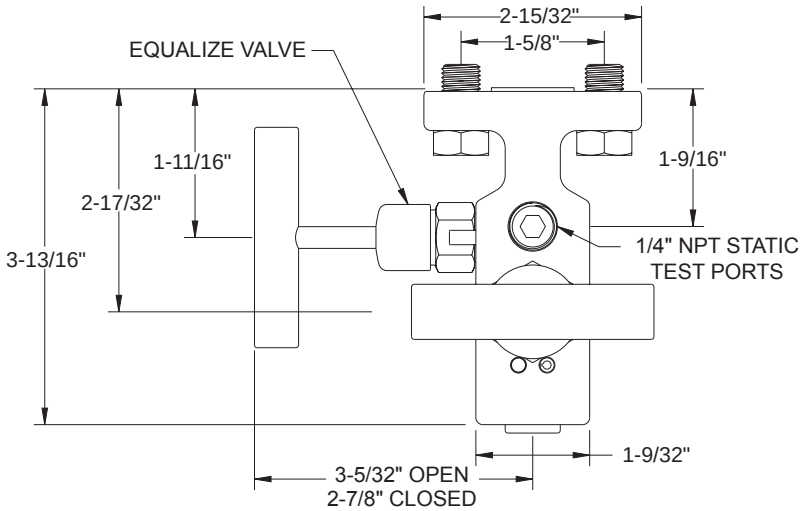

Dimensions

Female-Female

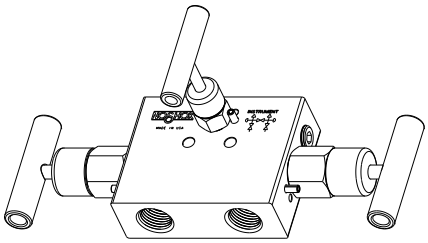

Top View

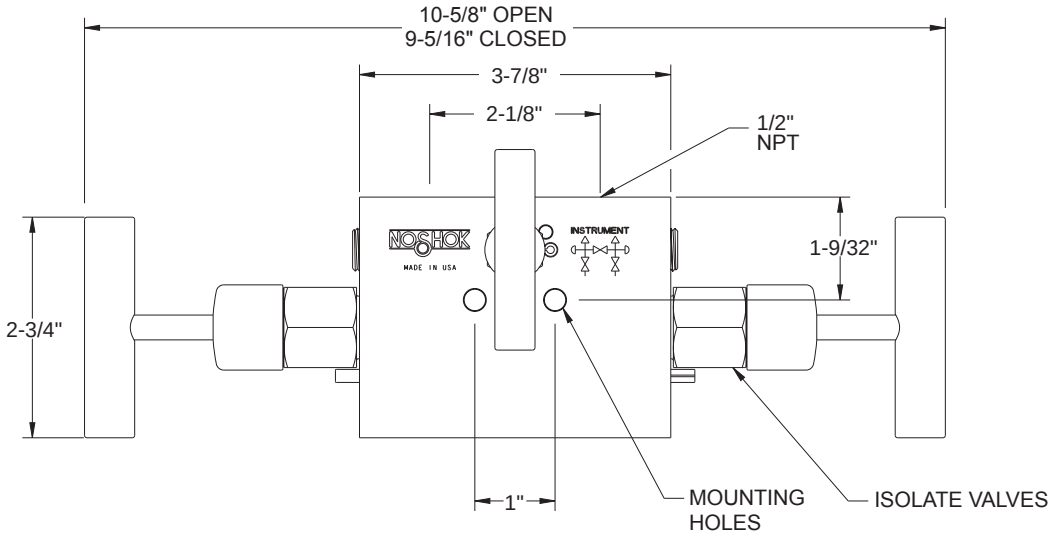

Side View

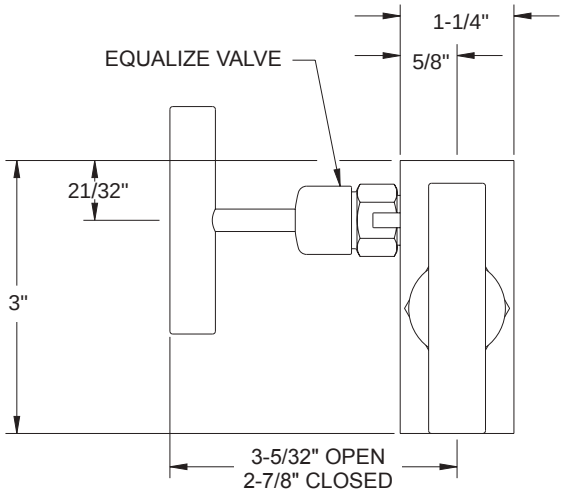

For panel mount or packing dimensions, see pg. 66.

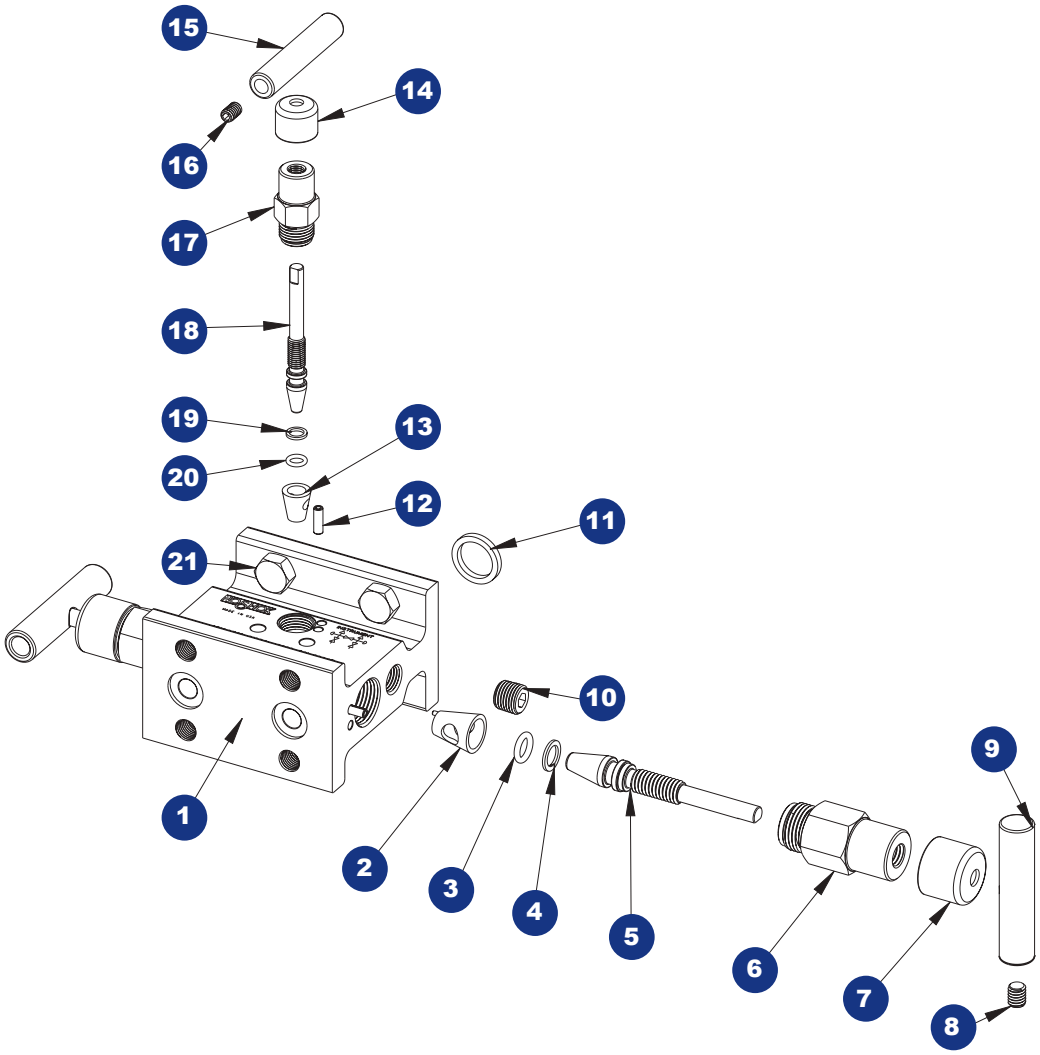

1 Valve body
2 Acetal seat
3 FKM o-ring
4 PTFE back-up ring
5 Non-rotating stem assembly
6 Valve bonnet
7 Blue dust cap
8 Set screw
9 Valve "T" handle
10 Plug
11 Gasket ring
12 Slotted spring pin
13 Acetal seat
14 Green dust cap
15 Valve "T" handle
16 Set screw
17 Valve bonnet
18 Valve stem
19 PTFE back-up ring
20 FKM o-ring
21 Head bolt

Mini, Hard Seat & Soft Tip (0.141" Orifice)

3610/3710 SERIES



- Compact design is ideal for installations with limited space, such as behind panels or in cabinets
- Designed for use with differential pressure transmitters incorporating two isolation valves and an equalizing valve in differential pressure measurement
- 100% helium leak tested to 1 x 10^{-4} ml/s for performance and reliability
- Soft tip valves feature a patented Acetal non-rotating soft tip stem, and a back-up metal-to-metal seal **(U.S. Patent 6,820,857)**
- Blow-out proof stem provides a secondary stem seal in the full open position
- FKM o-ring seal and PTFE back-up ring below the stem threads to protect from corrosion and galling; PTFE or Graphite packing optional
- All stem threads are rolled for strength and ease of operation
- One-piece bonnet with a metal-to-metal seal to the valve body below the bonnet threads
- Color coded vinyl dust caps for bonnets and stems (non-packing)
- Patented body-to-bonnet, metal-to-metal seal is designed to significantly increase the pressure range of the valve **(U.S. Patent 7,758,014)**

Flow Schematic

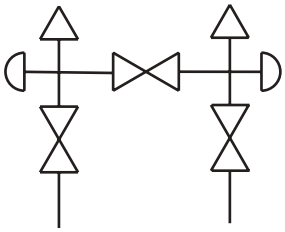

SPECIFICATIONS	
Materials	Zinc-Nickel plated Steel, electropolished 316 Stainless Steel*
Connection	1/4" NPT
Pressure ratings**	Hard seat: 10,000 psi @ 200 °F Soft tip: 6,000 psi @ 200 °F
Orifice size	0.141"
Flow coefficient	C_V 0.44
Stem seal & type	All 316 Stainless Steel stems with FKM o-ring and PTFE back-up ring below the threads, PTFE or Graphite packing optional
Options	Panel mountings, o-ring materials, handles, packings, regulating stem and stem tips
Weight	Approximately 1.4 lb.

* All 316SS products meet the requirements of NACE MR0175/ISO 15156-3.
** If a packing option is chosen, maximum pressure rating is 6,000 psi. Refer to the "Pressure vs. Temperature: Packing Style with Compatible Fluid" chart at the back of this catalog.

⚠ **WARNING:** This product can expose you to chemicals including Lead and Nickel, which are known to the State of California to cause cancer and birth defects or other reproductive harm. For more information go to www.P65Warnings.ca.gov

NOTE: All NOSHOK valve products conform to the MSS SP-99 instrument valves standards, and valves supplied with packing also conform to MSS SP-132 compression packing systems for instrument valves standard.

Adaptive Industrial Solutions | sales@adaptiveind.com | (877) 818-5009

SERIES	3	3-valve		
SEATS	6	Hard seat	7	Soft tip
PROCESS TYPE	1	Differential pressure		
CONNECTION	0	1/4" NPT		
VALVE TYPES	FFC	Female-Female, Steel	FFS	Female-Female, Stainless Steel

Please consult your local NOSHOK Distributor or NOSHOK, Inc. for availability and delivery information.

EXAMPLE

3 6 1 0 – FFC

Series..... 3-valve
Seat..... Hard seat
Process type.....Differential pressure
Connection.....1/4" NPT
Valve type.....Female-female, Steel

To meet all of your specific application requirements, the following **additional options** are available for these manifold valves. To order all or any of these options, simply add them to the part number as shown in the diagram below.

NOTE 1: The example shown includes ALL possible additional options. Please include ONLY the options required for your application when building your part number. (EXAMPLE: 3610-FFC-P1)

NOTE 2: When a packing option is selected, an o-ring option is NOT available.

NOTE 3: The standard o-ring in all the NOSHOK manifold valves is FKM.

ORDERING INFORMATION - ADDITIONAL OPTIONS									
PACKINGS†	P1	PTFE	P2	Graphite**					
STEM TIPS	T1	Non-rotating (316 Stainless)**	T4	PEEK***	T7	Ball (ceramic)**	T10	Regulating Acetal ***
	T2	Acetal (Acetal)***	T5	Ball (440C Stainless)**	T8	Ball (Monel)**	T11	Regulating PCTFE***
	T3	PCTFE***	T6	Ball (carbide)**	T9	Non-rotating regulating (316 Stainless)**	T12	Regulating PEEK***
O-RINGS*	EM1	EPDM	KZ1	FFKM (Perfluoroelastomer)	NB1	NBR		
HANDLES	HL2	2-1/2" "T"	HL3	1" Round knurled	HL4	1-3/8" Phenolic	HL5	1-3/4" Phenolic

Please consult your local NOSHOK Distributor or NOSHOK, Inc. for availability and delivery information.

* Other o-ring materials available on request.
** For 3610 only.
*** For 3710 only.
† If a packing option is chosen, maximum pressure rating is 6,000 psi. Refer to the "Pressure vs. Temperature: Packing Style with Compatible Fluid" chart at the back of this catalog.

Please note that the standard o-ring in all the NOSHOK valves is FKM and the standard handles are 1-3/8" mini "T" handles (HL7).

The handle material will always match the material of the valve, unless otherwise specified. For example, the 1-3/8" mini "T" handle (HL7) on the 3710-FFC will be Steel. When only the standard configuration is needed, no additional designations are necessary. Please consult the factory for special application requests.

EXAMPLE with Additional Options

3 6 1 0 – FFC – P1 – T1

Series.....3-valve
Seat.....Hard seat
Process type.....Differential pressure
Connection.....1/4" NPT
Valve type.....Female-female, Steel
Packing.....PTFE
Stem tip..... Non-rotating

Dimensions

Female-Female

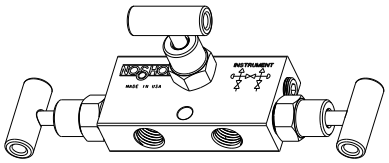

Top View

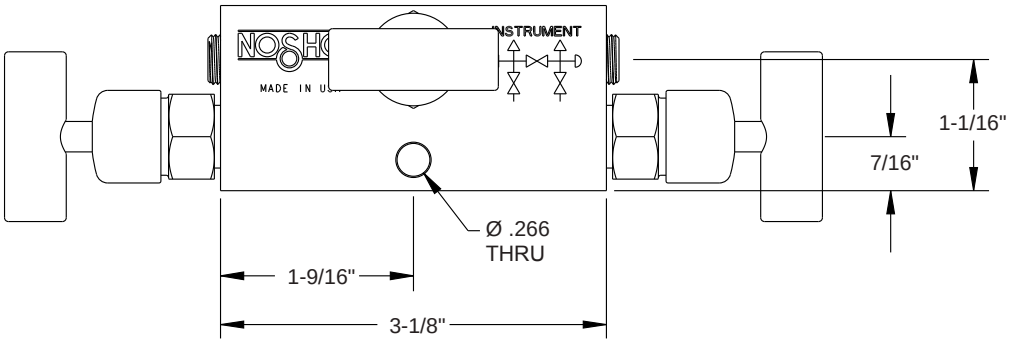

Front View

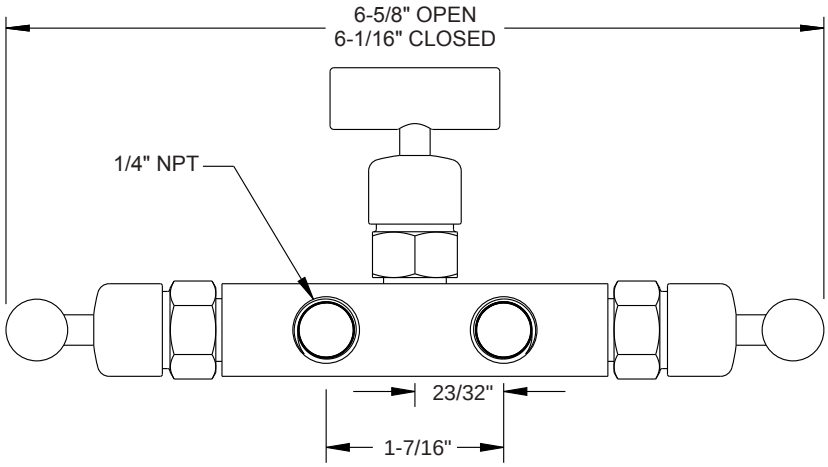

Side View

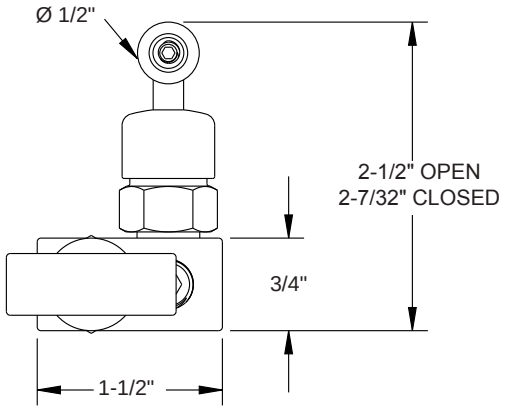

For panel mount or packing dimensions, see pg. 66.

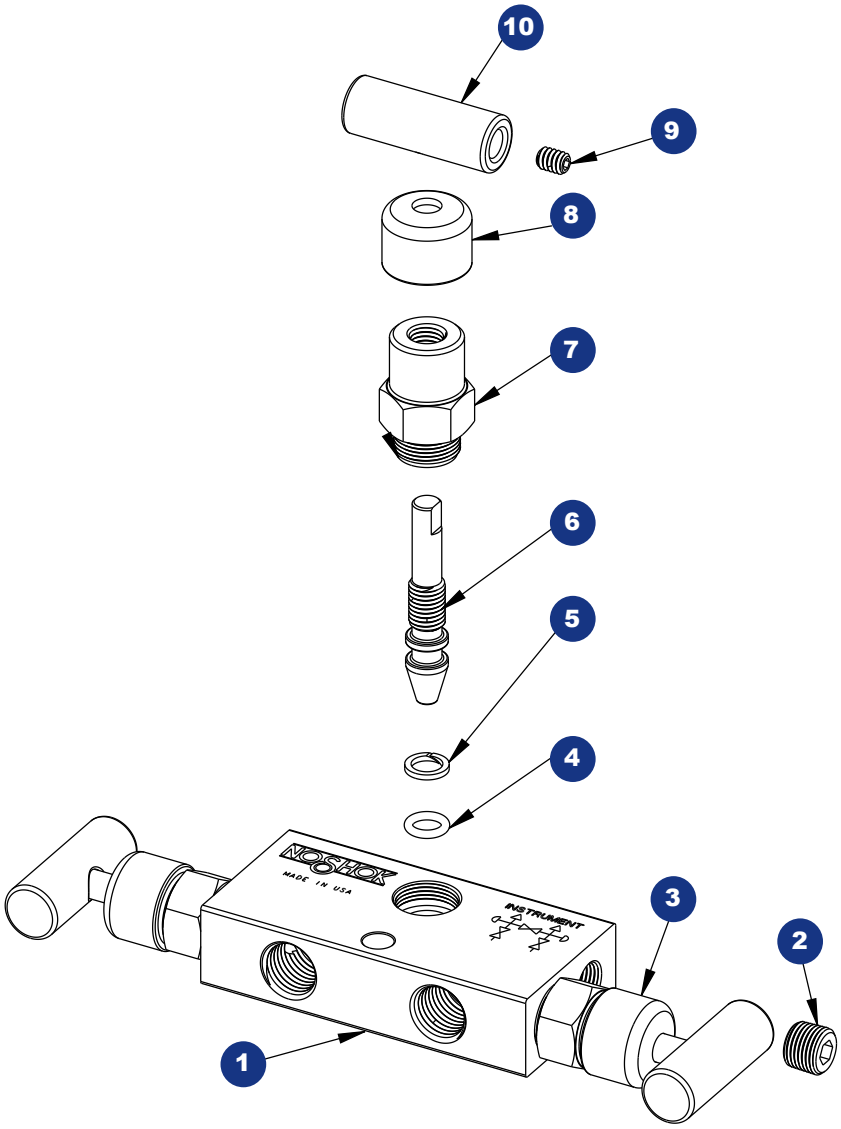

1 Valve body
2 Plug
3 Blue dust cap
4 FKM o-ring
5 PTFE back-up ring
6 Soft tip stem
7 Mini valve bonnet
8 Green dust cap
9 Set screw
10 Mini valve “T” handle

Hard Seat & Soft Seat/Tip

NOSHOK

5030/5130 SERIES





Flare Pattern™ option



Flow Schematic

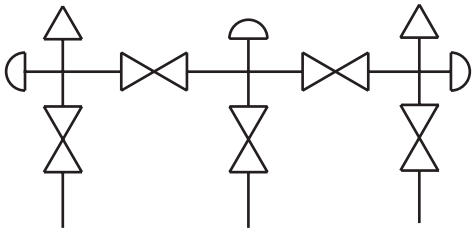

- Designed for use with differential pressure transmitters incorporating two isolation valves, two equalizing valves and a vent valve required in natural gas applications
- Flare Pattern™ valve configuration provides maximum clearance for fingers during operation
- Soft tip valves feature a patented Acetal non-rotating soft tip stem, and a back-up metal-to-metal seal **(U.S. Patent 6,820,857)**
- Available in block, single flange, or double flange connection for remote or direct installation
- 100% helium leak tested to 1 x 10^{-4} ml/s for performance and reliability
- 5130 Series valves also feature a replaceable Acetal seat, and straight through porting for bidirectional, high capacity flow and easy roddable cleaning of the block valves
- Blow-out proof stem provides a secondary stem seal in the full open position
- FKM o-ring seal and PTFE back-up ring below the stem threads to protect from corrosion and galling; PTFE or Graphite packing optional
- One-piece bonnet with a metal-to-metal seal to the valve body below the bonnet threads
- Slotted spring pin to prevent accidental loosening
- Patented body-to-bonnet, metal-to-metal seal is designed to significantly increase the pressure range of the valve **(U.S. Patent 7,758,014)**

SPECIFICATIONS

Materials	Zinc-Nickel plated Carbon Steel, electropolished 316 Stainless Steel*
Connection	Flange-flange, 1/2" NPT-flange, 1/2" NPT-1/2" NPT
Pressure ratings**	Hard seat: 10,000 psi @ 200° F Soft seat/tip: 6,000 psi @ 200 °F
Orifice size	0.187"
Flow coefficient	Hard seat: C_V 0.44 Soft seat/tip: C_V 0.76
Stem seal & type	All 316 Stainless Steel stems with FKM o-ring and PTFE back-up ring below the threads.
Additional features	Two static (test) ports, color coded vinyl bonnet and stem dust cap, patented soft seat/tip stem design on equalizing and vent valves
Options	Panel mountings, o-ring materials, handles, packings, regulating stem and stem tips
Weight	Approximately 4.2 lb. without flange Approximately 6.0 lb. with flange

* All 316SS products meet the requirements of NACE MR0175/ISO 15156-3.
** If a packing option is chosen, maximum pressure rating is 6,000 psi. Refer to the "Pressure vs.Temperature: Packing Style with Compatible Fluid" chart at the back of this catalog.

⚠ **WARNING:** This product can expose you to chemicals including Lead and Nickel, which are known to the State of California to cause cancer and birth defects or other reproductive harm. For more information go to www.P65Warnings.ca.gov

NOTE: All NOSHOK valve products conform to the MSS SP-99 instrument valves standards, and valves supplied with packing also conform to MSS SP-132 compression packing systems for instrument valves standard.

Adaptive Industrial Solutions | sales@adaptiveind.com | (877) 818-5009

SERIES	**5**	5-valve					
SEATS	**0**	Hard seat	**1**	Soft seat/tip			
PROCESS TYPE	**3**	Natural gas flow					
CONNECTION	**0**	1/2" NPT or flange					
VALVE TYPES	**MFC**	Flange-Female, Steel	**MFS**	Flange-Female, Stainless Steel	**MMC**	Flange-Flange, Steel	
	FFC	Female-Female, Steel	**FFS**	Female-Female, Stainless Steel	**MMS**	Flange-Flange, Stainless Steel	

Please consult your local NOSHOK Distributor or NOSHOK, Inc. for availability and delivery information.

EXAMPLE **5 1 3 0 – MFC**

Series..... 5-valve
Seat.....Soft seat/tip
Process type..... Natural gas flow
Connection.....1/2" NPT standard
Valve type.....Flange-female, Steel

To meet all of your specific application requirements, the following **additional options** are available for these manifold valves. To order all or any of these options, simply add them to the part number as shown in the diagram below.

NOTE 1: The example shown includes ALL possible additional options. Please include ONLY the options required for your application when building your part number. (EXAMPLE: 5130-MFC-P1)

NOTE 2: When a packing option is selected, an o-ring option is NOT available.

NOTE 3: The standard o-ring in all the NOSHOK manifold valves is FKM and T1 hard non-rotating (316SS standard) stem tip is the only option available for the Isolation valves on the 5130 Series. All other stem tip options are available for the equalize and vent valves.

ORDERING INFORMATION - ADDITIONAL OPTIONS

BODY CONFIGURATION	**FP**	Flare Pattern™						
SOFT SEATS	**PK1**	PEEK	**KF1**	PCTFE				
PACKINGS†	**P1**	PTFE	**P2**	Graphite**				
STEM TIPS	**T1**	Non-rotating (316 Stainless)	**T4**	PEEK***	**T7**	Ball (ceramic)**	**T10**	Regulating Acetal***
	T2	Acetal (Acetal)***	**T5**	Ball (440C Stainless)**	**T8**	Ball (Monel)**	**T11**	Regulating PCTFE***
	T3	PCTFE***	**T6**	Ball (carbide)**	**T9**	Non-rotating regulating (316 Stainless)**	**T12**	Regulating PEEK***
O-RINGS*	**EM1**	EPDM	**KZ1**	FFKM (Perfluoroelastomer)			**NB1**	NBR
HANDLES	**HL1**	1-13/16" Mini "T"	**HL3**	1" Round knurled	**HL4**	1-3/8" Phenolic	**HL5**	1-3/4" Phenolic

Please consult your local NOSHOK Distributor or NOSHOK, Inc. for availability and delivery information.

* Other o-ring materials available on request.
** For 5030 only.
*** For 5130 only.

† If a packing option is chosen, maximum pressure rating is 6,000 psi. Refer to the"Pressure vs. Temperature: Packing Style with Compatible Fluid" chart at the back of this catalog.

Please note that the standard o-ring in all the NOSHOK valves is FKM and the standard handles are isolation "T" handles (HL2) and equalizing & vent 1-3/8" mini "T" handles (HL7).

The handle material will always match the material of the valve, unless otherwise specified. For example, handles on the 5130-MFC will be Steel. When only the standard configuration is needed, no additional designations are necessary. Please consult the factory for special application requests.

EXAMPLE with Additional Options **5 1 3 0 – MFC – FP – PK1 – P1 – T1**

Series..... 5-valve
Seat.....Soft seat/tip
Process type..... Natural gas flow
Connection.....1/2" NPT standard
Valve type.....Flange-female, Steel
Body configuration .....Flare Pattern™
Soft seat ..... PEEK
Packing.....PTFE
Stem tip ..... Non-rotating

Dimensions

Flange-Flange

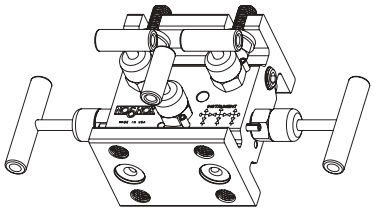

Top View

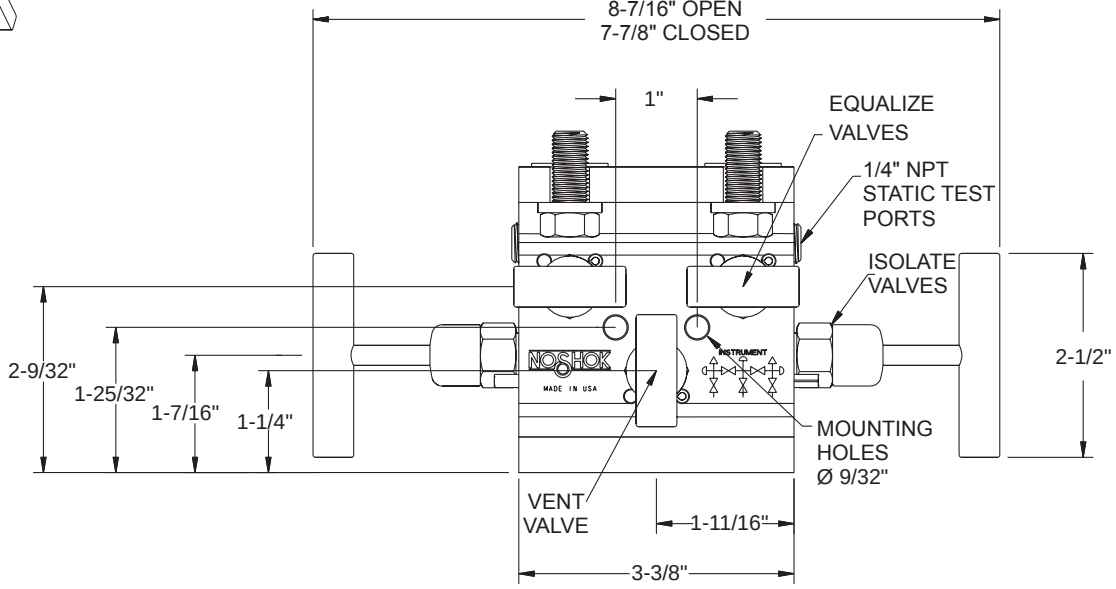

Front View

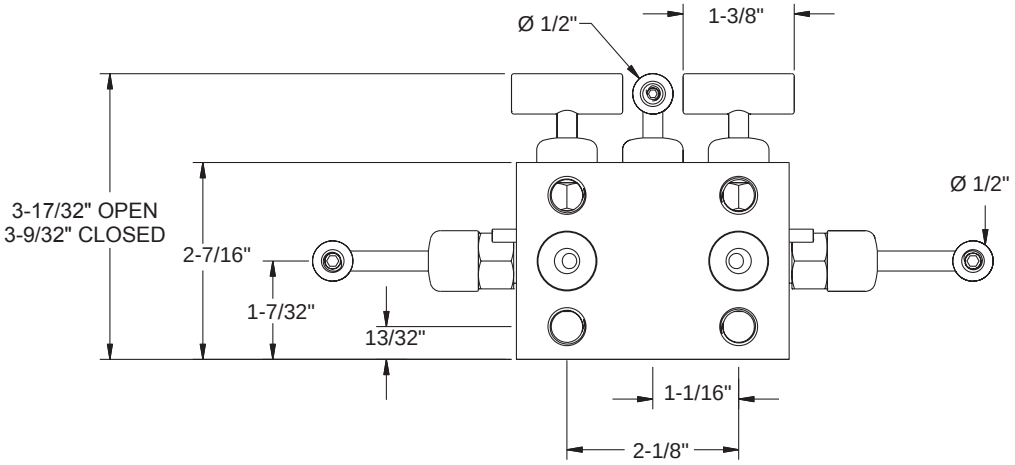

Side View

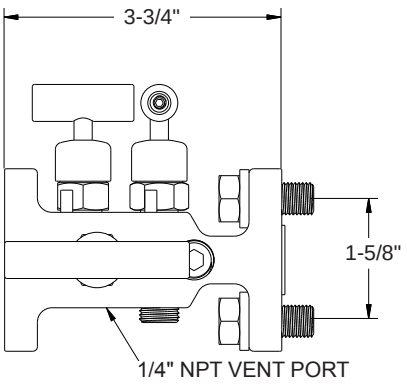

Flange-Female

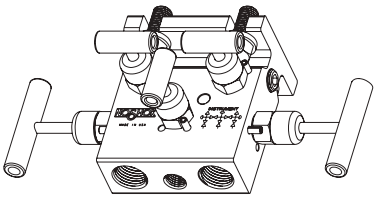

Top View

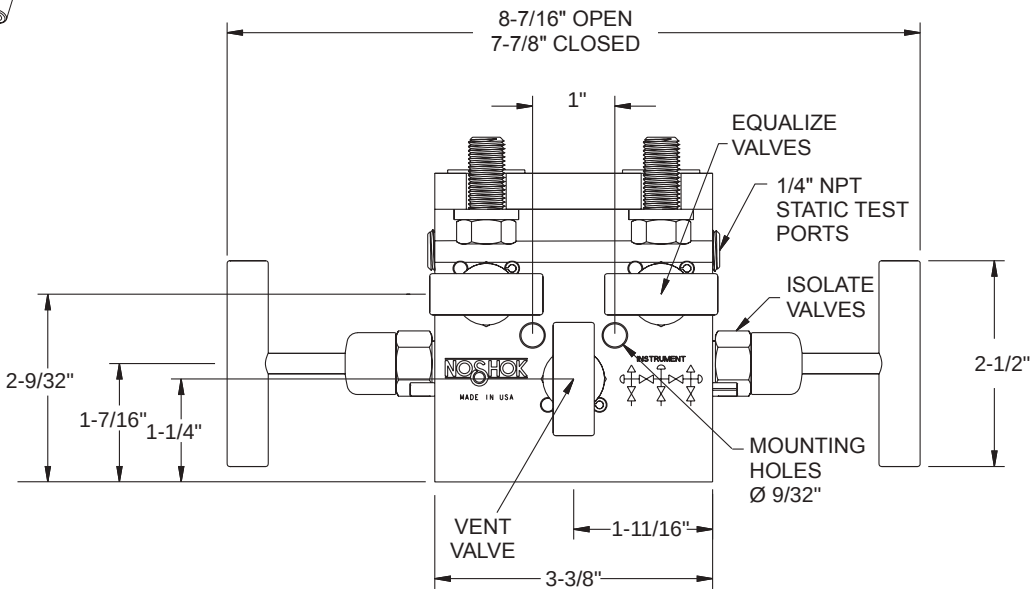

Front View

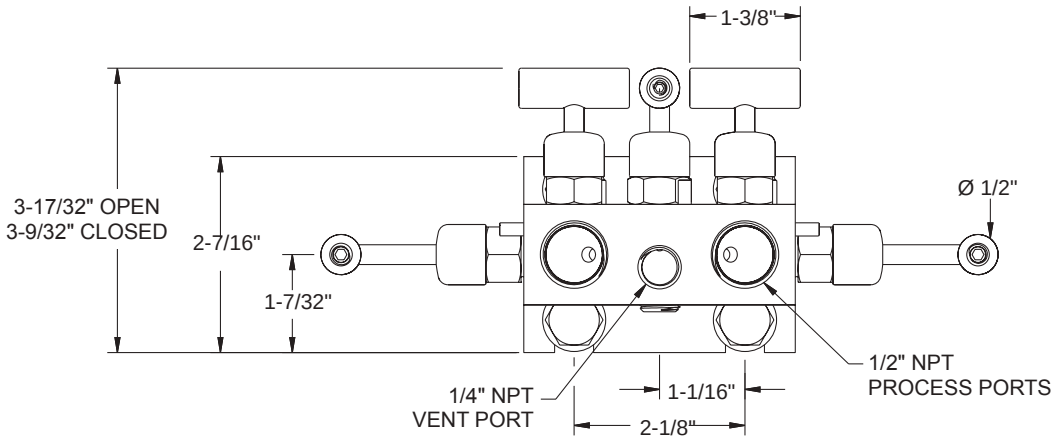

Side View

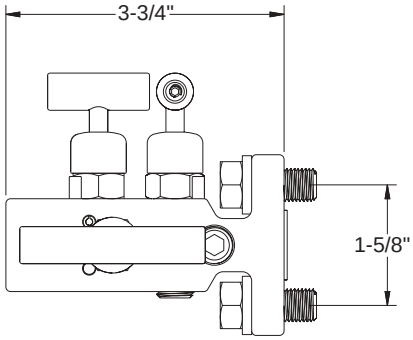

Dimensions

Female-Female

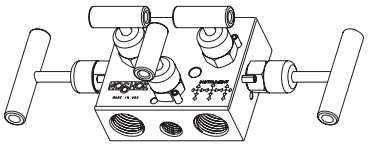

Top View

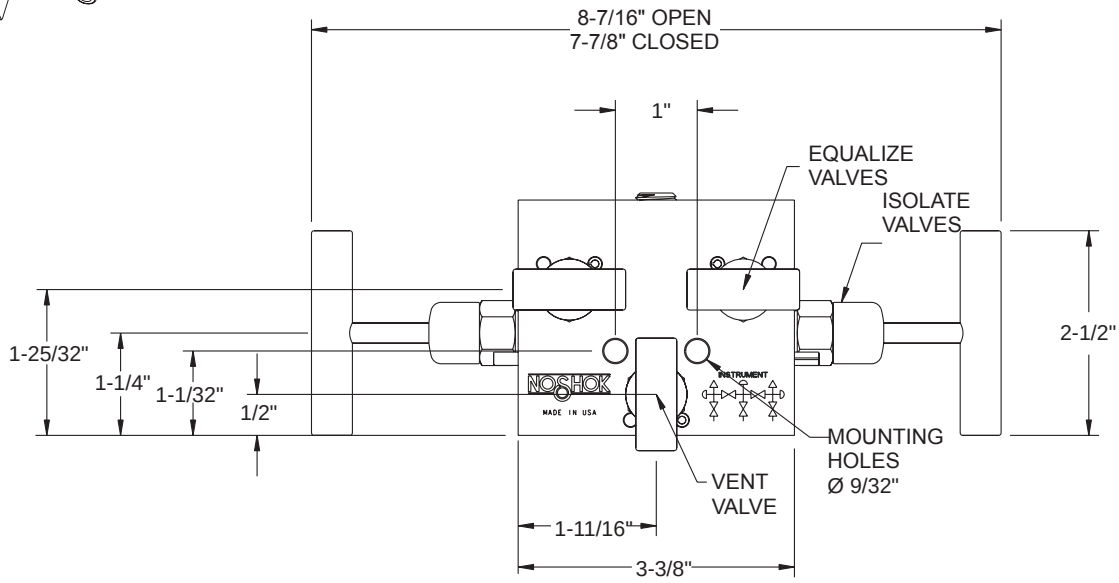

Front View

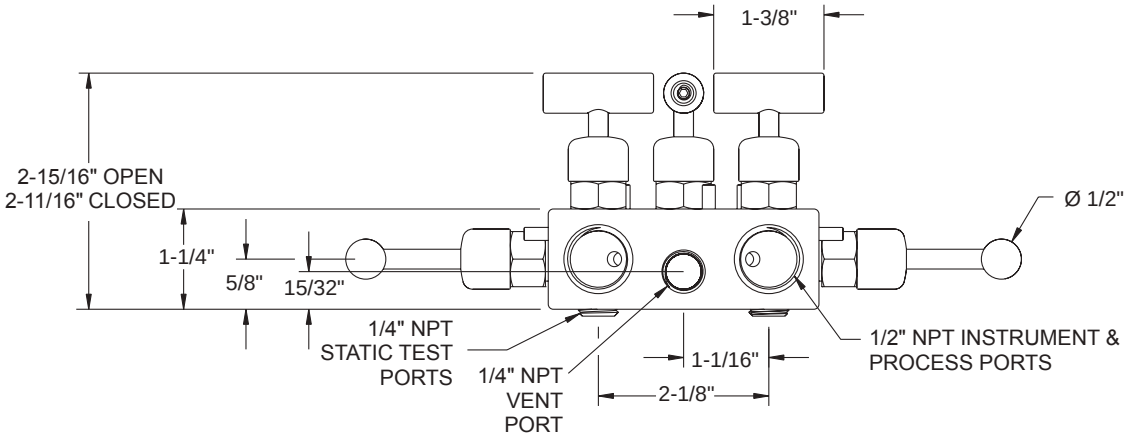

Side View

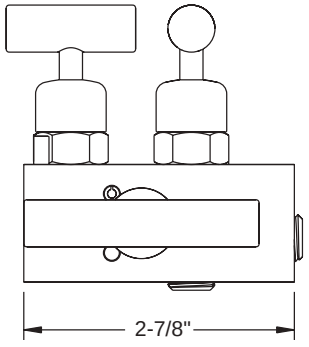

For panel mount or packing dimensions, see pg. 66.

Hard Seat

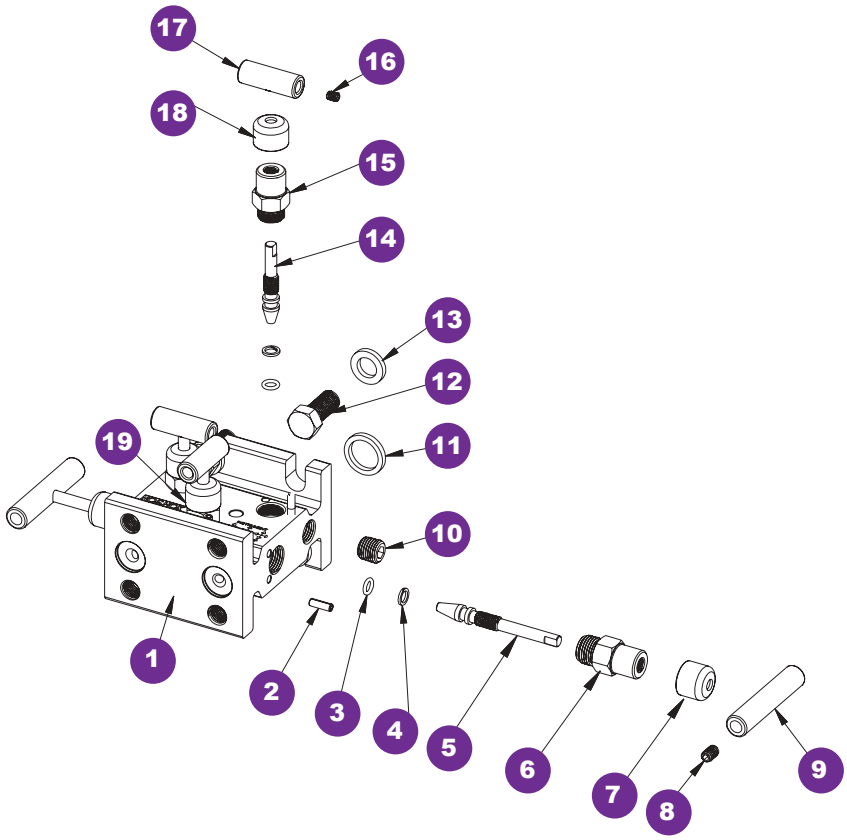

1 Valve body
2 Slotted spring pin
3 FKM o-ring
4 PTFE back-up ring
5 Valve stem
6 Valve bonnet
7 Blue dust cap
8 Set screw
9 Valve “T” handle
10 Plug
11 Gasket ring
12 Head bolt
13 Washer
14 Mini valve stem
15 Mini valve bonnet
16 Set screw
17 Mini valve “T” handle
18 Green dust cap
19 Red dust cap

Soft Seat

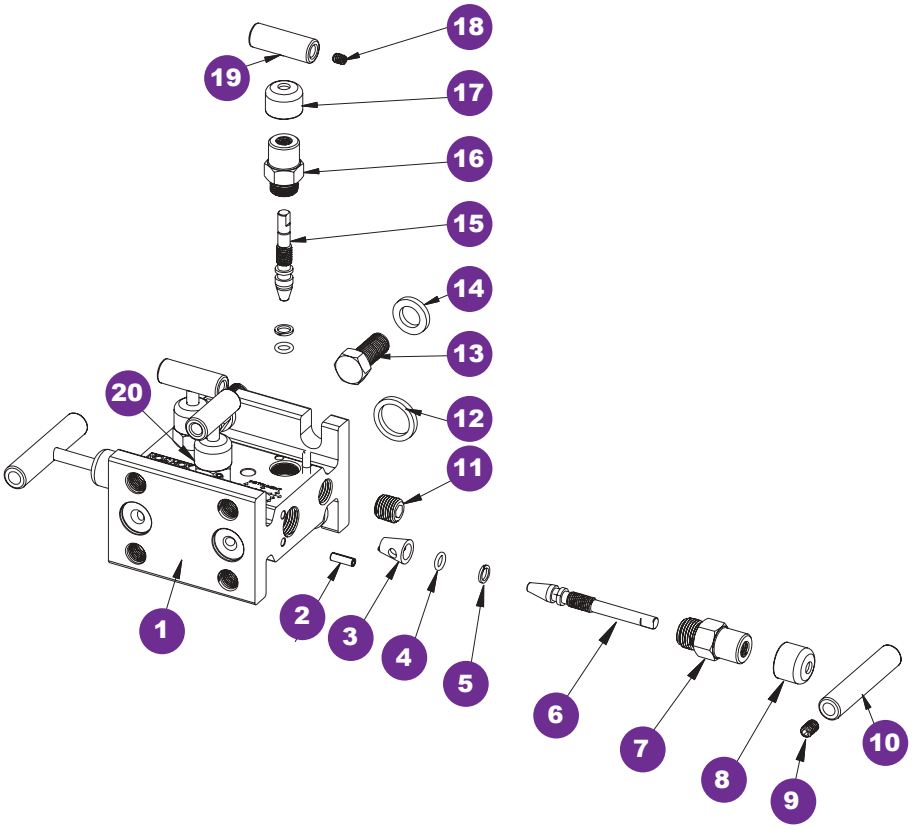

1 Valve body
2 Slotted spring pin
3 Acetal seat
4 FKM o-ring
5 PTFE back-up ring
6 Valve stem
7 Valve bonnet
8 Blue dust cap
9 Set screw
10 Valve “T” handle
11 Plug
12 Gasket ring
13 Head bolt
14 Washer
15 Soft tip stem
16 Mini valve bonnet
17 Green dust cap
18 Set screw
19 Mini valve “T” handle
20 Red dust cap

Dimensions

Flare Pattern™ Flange-Flange

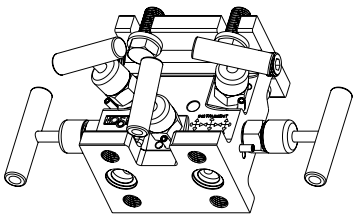

Top View

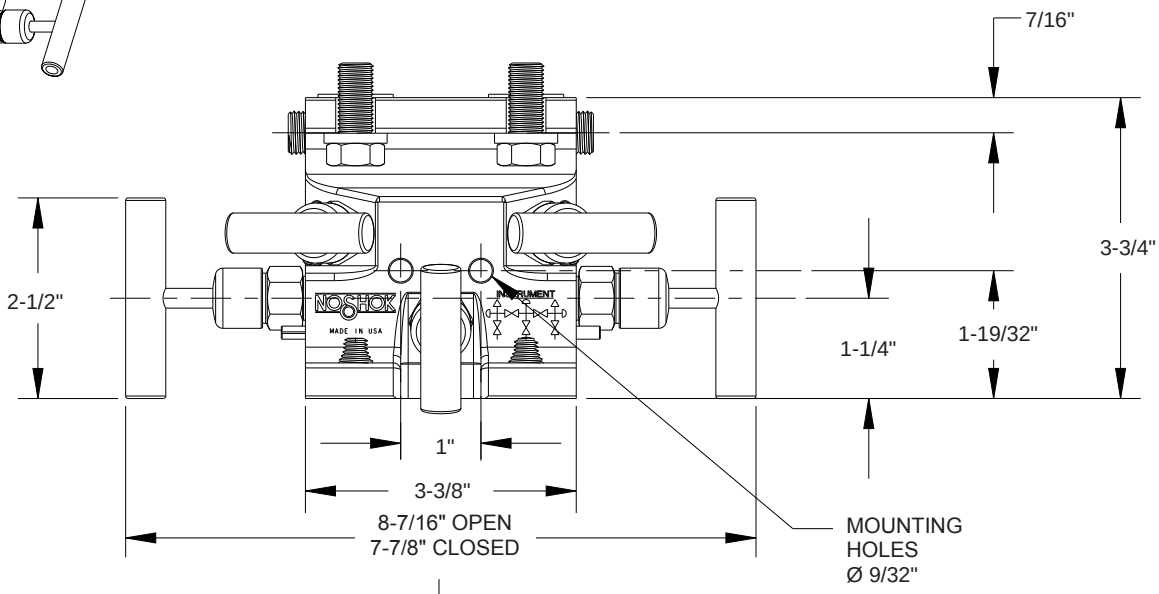

Front View

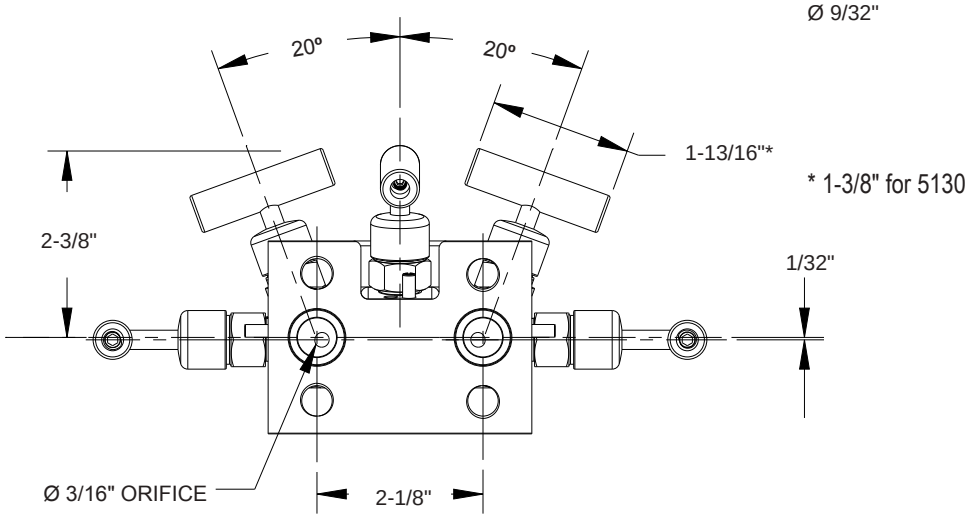

Side View

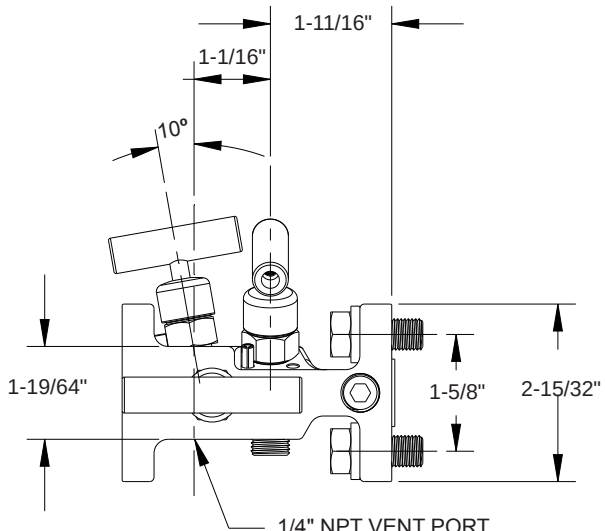

Flare Pattern™ Flange-Female

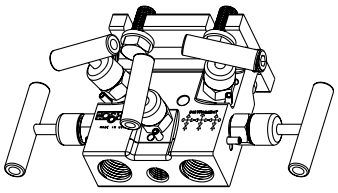

Top View

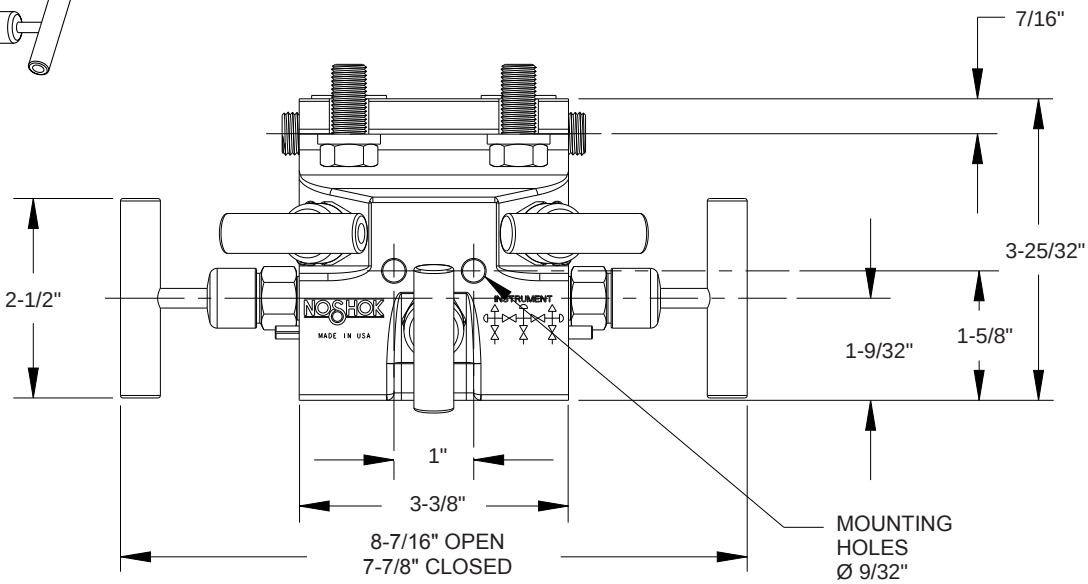

Front View

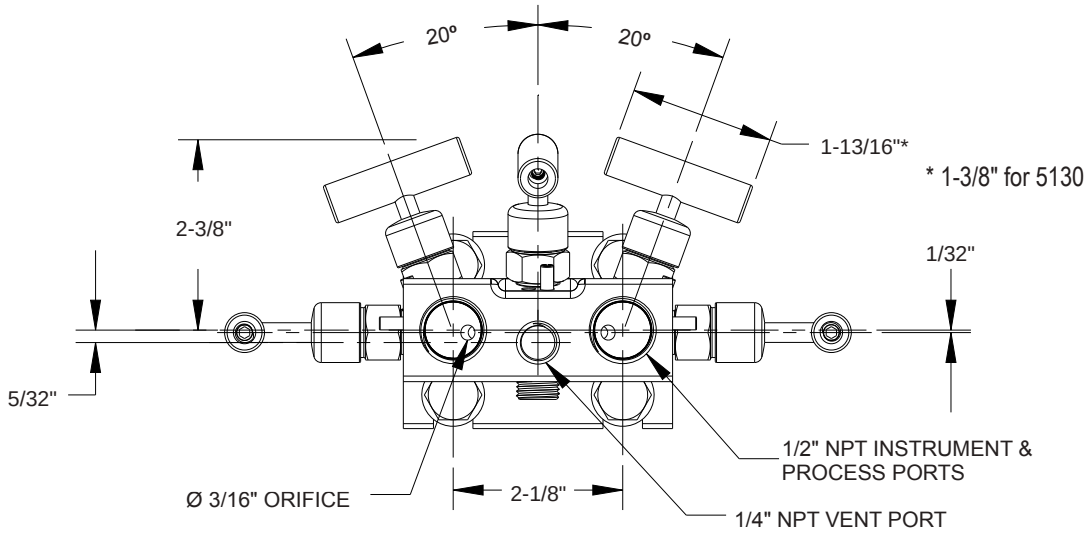

Side View

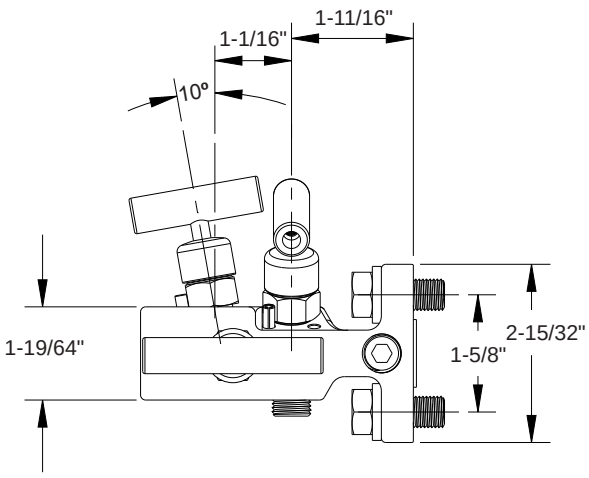

Dimensions

Flare Pattern™ Female-Female

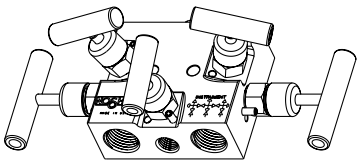

Top View

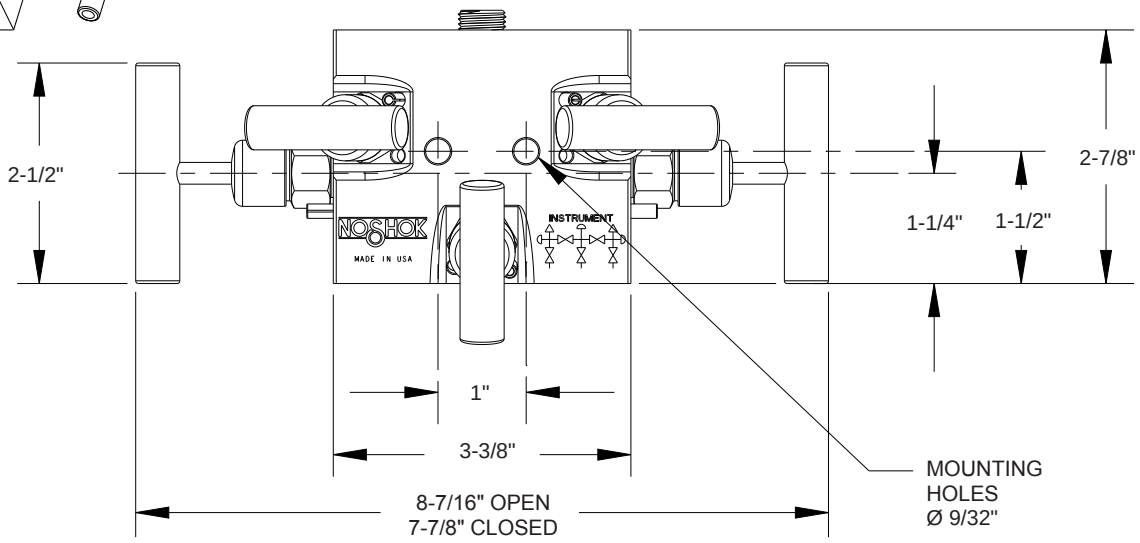

Front View

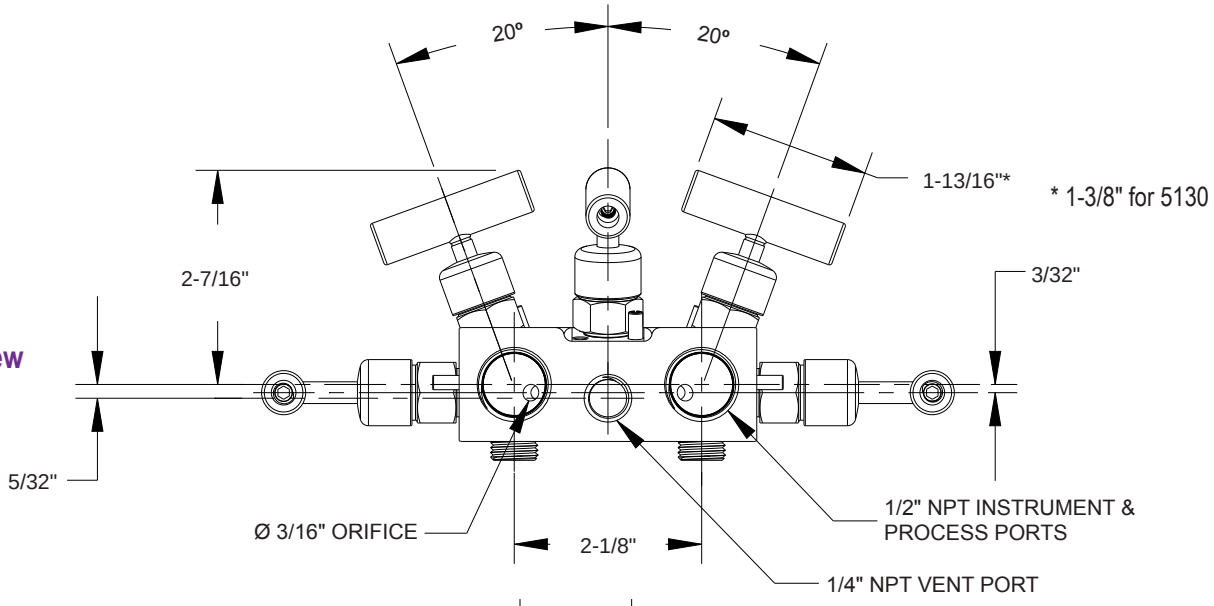

Side View

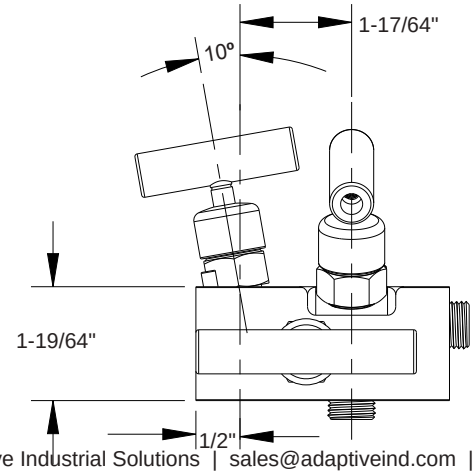

For panel mount or packing dimensions, see pg. 66.

Hard Seat

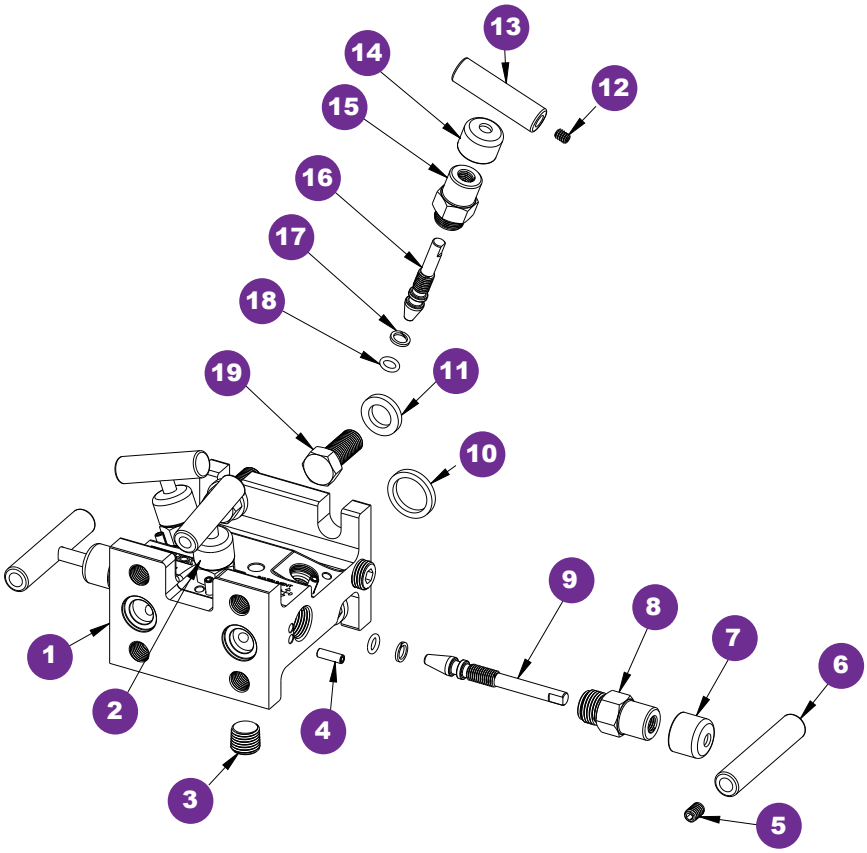

1 Flare Pattern™ valve body
2 Red dust cap
3 Plug
4 Slotted spring pin
5 Set screw
6 Valve “T” handle
7 Blue dust cap
8 Valve bonnet
9 Valve stem
10 Gasket ring
11 Washer
12 Set screw
13 Mini valve “T” handle
14 Green dust cap
15 PTFE back-up ring
16 Valve stem
17 PTFE back-up ring
18 FKM o-ring
19 Head bolt

Soft Seat

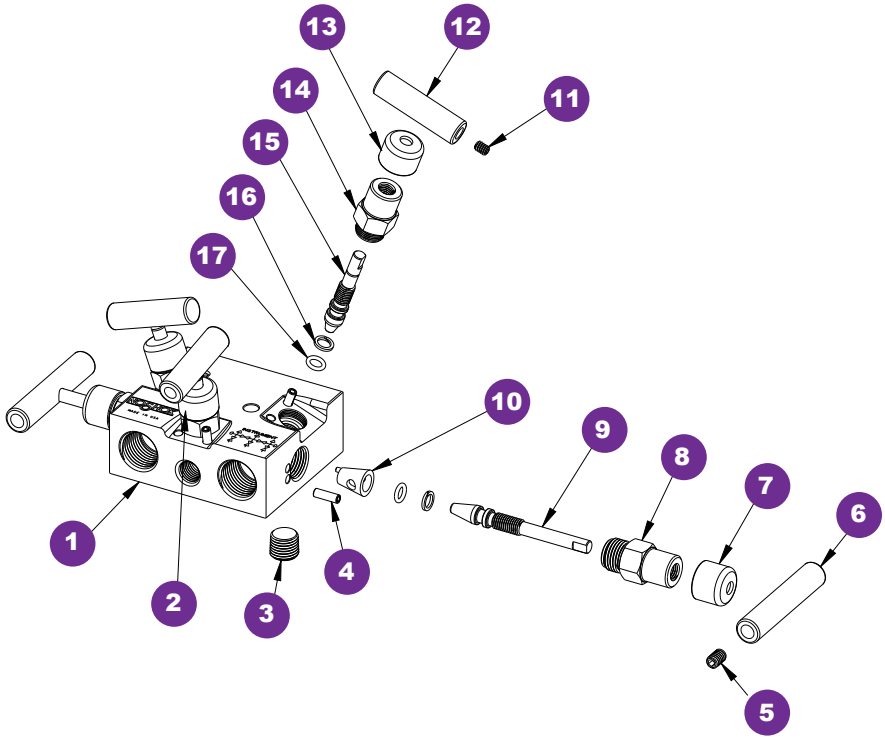

1 Flare Pattern™ valve body
2 Red dust cap
3 Plug
4 Slotted spring pin
5 Set screw
6 Valve “T” handle
7 Blue dust cap
8 Valve bonnet
9 Valve stem
10 Soft seat
11 Set screw
12 Mini valve “T” handle
13 Green dust cap
14 Valve bonnet
15 Soft tip stem
16 PTFE back-up ring
17 FKM o-ring

Compact Style Hard Seat

5040/5090 SERIES





- Compact style, power pattern is designed for use with differential pressure transmitters incorporating two isolation valves, one equalizing valve and two vent valves in power pattern applications
- Compact style, natural gas flow is designed for use with differential pressure transmitters incorporating two isolation valves, two equalizing valves and a vent valve in natural gas applications
- 100% helium leak tested to 1 x 10^{-4} ml/s for performance and reliability
- Blow-out proof stem provides a secondary stem seal in the full open position
- FKM o-ring seal and PTFE back-up ring below the stem threads to protect from corrosion and galling
- All stem threads are rolled for strength and ease of operation
- One-piece bonnet with a metal-to-metal seal to the valve body below the bonnet threads
- Slotted spring pin to prevent accidental loosening
- Labeled and color coded vinyl dust caps for bonnets and stems

Differential/Power Pattern Flow Schematic (5040)

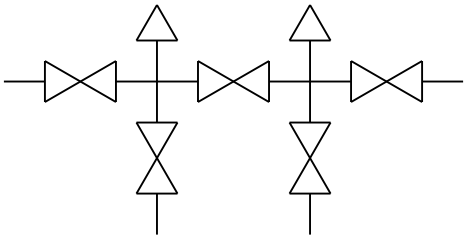

Natural Gas Flow Schematic (5090)

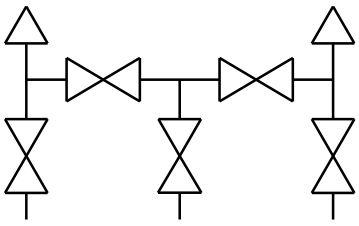

SPECIFICATIONS	
Materials	Electropolished 316 Stainless Steel*
Connection	1/2" NPT-flange
Pressure ratings	6,000 psi @ 200 °F
Orifice size	0.125"
Flow coefficient	C_V 0.30
Stem seal & type	All 316 Stainless Steel stems with FKM o-ring and PTFE back-up ring below the threads, PTFE or Graphite packing optional
Options	Packings, regulating stem and stem tips o-ring materials and handles
Weight	Approximately 4.4 lb.

* All 316SS products meet the requirements of NACE MR0175/ISO 15156-3.

⚠ **WARNING:** This product can expose you to chemicals including Lead and Nickel, which are known to the State of California to cause cancer and birth defects or other reproductive harm. For more information go to www.P65Warnings.ca.gov

NOTE: All NOSHOK valve products conform to the MSS SP-99 instrument valves standards, and valves supplied with packing also conform to MSS SP-132 compression packing systems for instrument valves standard.

ORDERING INFORMATION				
SERIES	5	5-valve		
SEAT	0	Hard seat		
PROCESS TYPE	4	Compact style, power pattern	9	Compact style, natural gas flow
CONNECTION	0	1/2" NPT standard		
VALVE TYPES	MFS	Flange-Female, Stainless Steel (MSS SP-99 spacing)	MFS-CP	Flange-Female, Stainless Steel (Coplanar™ spacing)

Please consult your local NOSHOK Distributor or NOSHOK, Inc. for availability and delivery information.

EXAMPLE **5 0 4 0 – MFS**

Series.....5-valve
Seat.....Hard seat
Process type..... Compact style, power pattern
Connection.....1/2" NPT standard
Valve type..... Flange-female, Stainless Steel

To meet all of your specific application requirements, the following **additional options** are available for these manifold valves. To order all or any of these options, simply add them to the part number as shown in the diagram below.

NOTE 1: The example shown includes ALL possible additional options. Please include ONLY the options required for your application when building your part number. (EXAMPLE: 5040-MFS-P1)

NOTE 2: When a packing option is selected, an o-ring option is NOT available.

ORDERING INFORMATION - ADDITIONAL OPTIONS						
PACKINGS	P1	PTFE	P2	Graphite		
STEM TIPS	T1	Non-rotating (316 Stainless)	T6	Ball (carbide)	T8	Ball (Monel)
	T5	Ball (440C Stainless)	T7	Ball (ceramic)	T9	Non-rotating regulating (316 Stainless)
O-RINGS*	EM1	EPDM	KZ1	FFKM (Perfluoroelastomer)	NB1	NBR

Please consult your local NOSHOK Distributor or NOSHOK, Inc. for availability and delivery information.

* Other o-ring materials available on request.

EXAMPLE with Additional Options **5 0 9 0 – MFS – KZ1**

Series.....5-valve
Seat.....Hard seat
Process type..... Compact style, natural gas flow
Connection.....1/2" NPT standard
Valve type.....Flange-female, Stainless Steel
O-ring.....FFKM

Dimensions

Flange-Female Power Pattern MSS SP-99 Spacing

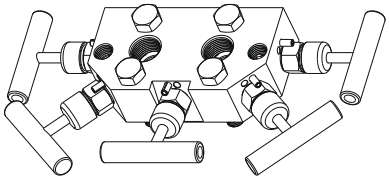

Bottom View

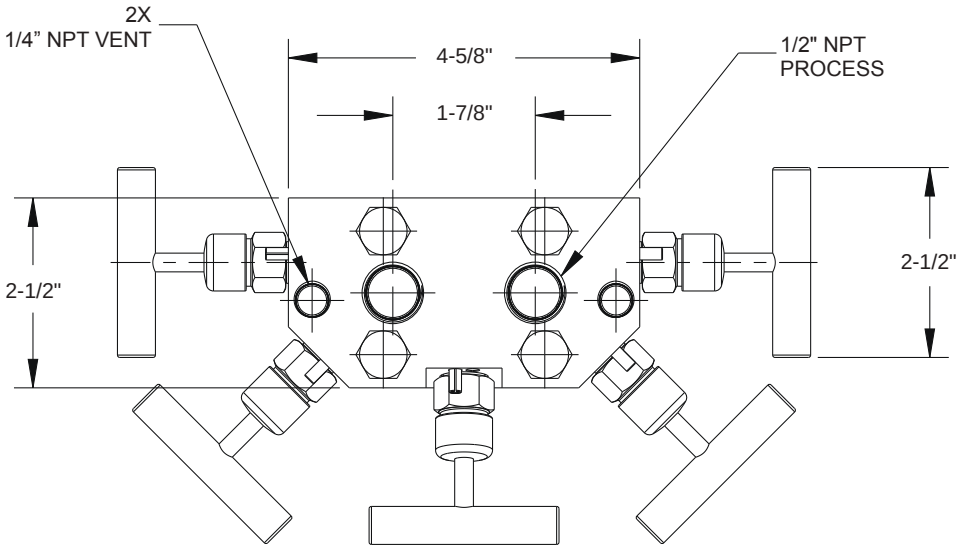

Top View

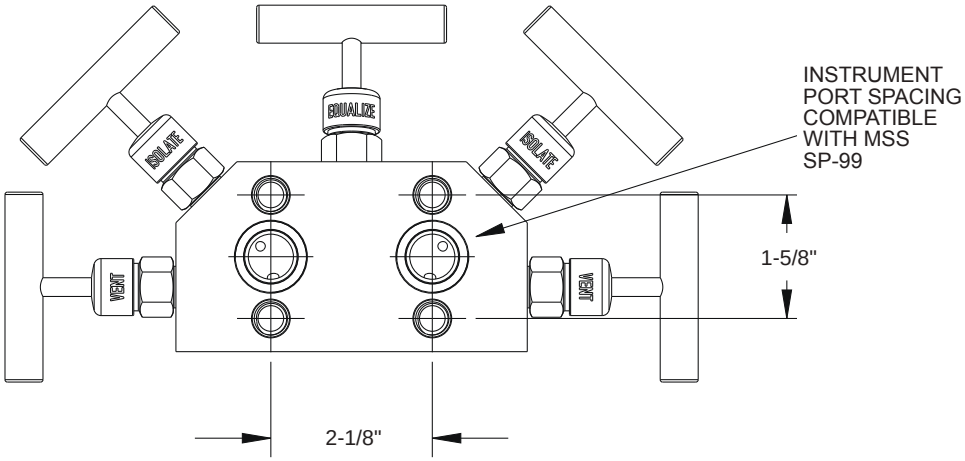

Front View

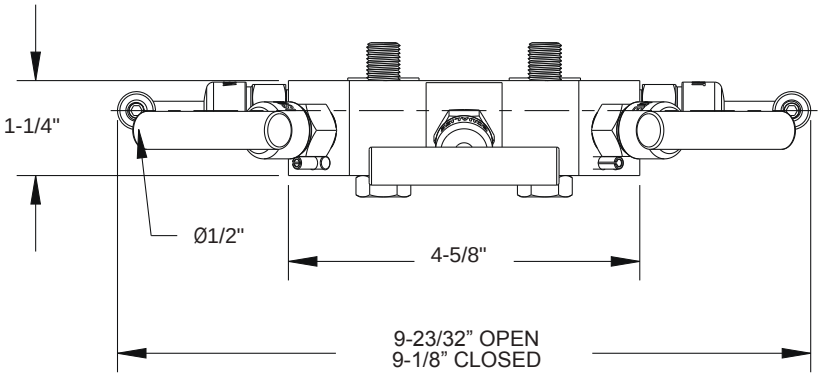

Flange-Female Power Pattern Coplanar™ Spacing

Note: All dimensions are the same as the SP-99 spacing except for the top view shown below.

Top View

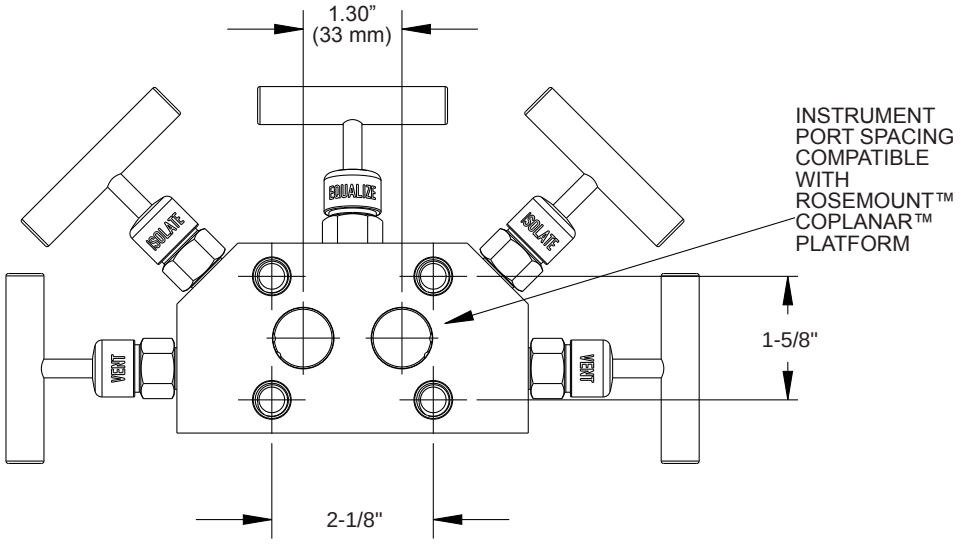

Flange-Female Power Pattern

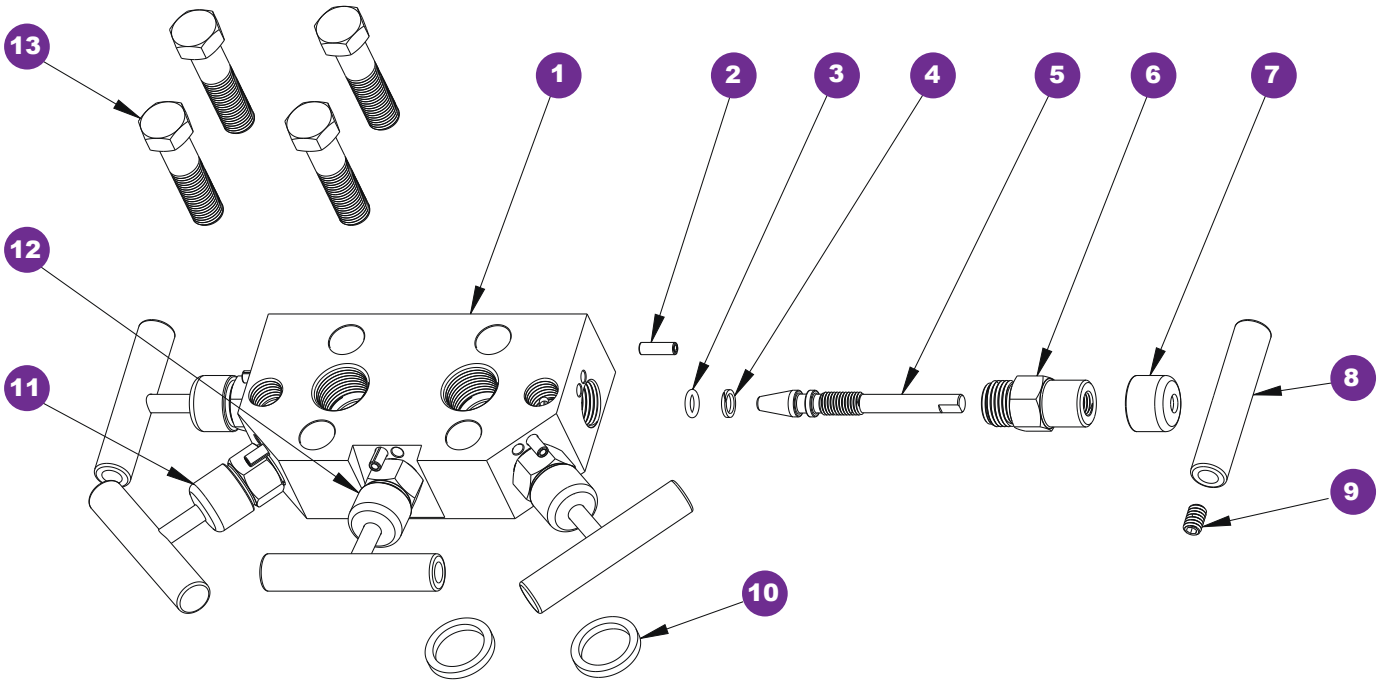

1 Valve body
2 Slotted spring pin
3 FKM o-ring
4 PTFE back-up ring
5 Valve stem
6 Valve bonnet
7 Red dust cap
8 Valve "T" handle
9 Set screw
10 Gasket ring
11 Blue dust cap
12 Green dust cap
13 Head bolt

Dimensions

Flange-Female Natural Gas Flow MSS SP-99 Spacing

Bottom View

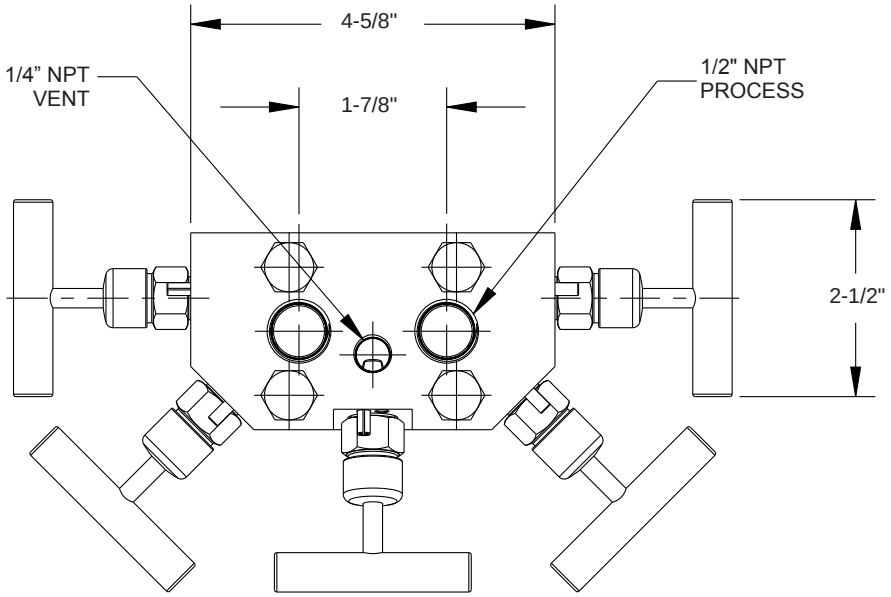

Top View

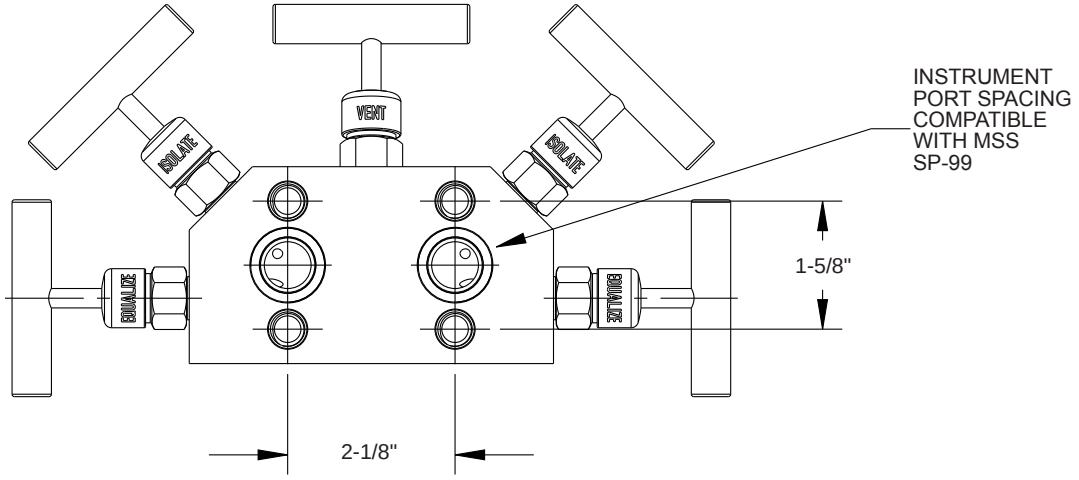

Front View

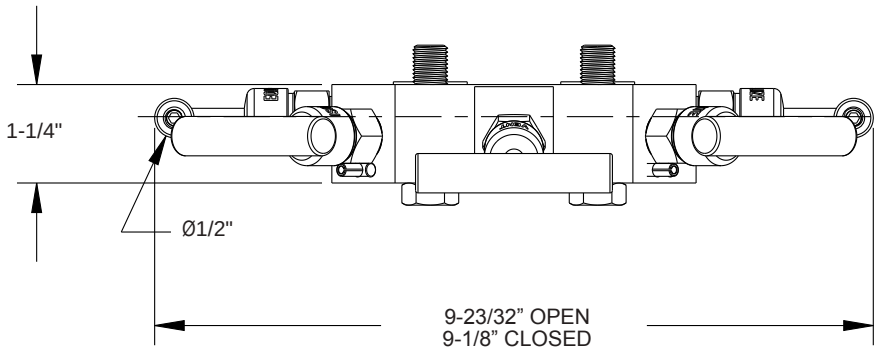

Flange-Female Natural Gas Flow Coplanar™ Spacing

Note: All dimensions are the same as the SP-99 spacing except for the top view shown below.

Top View

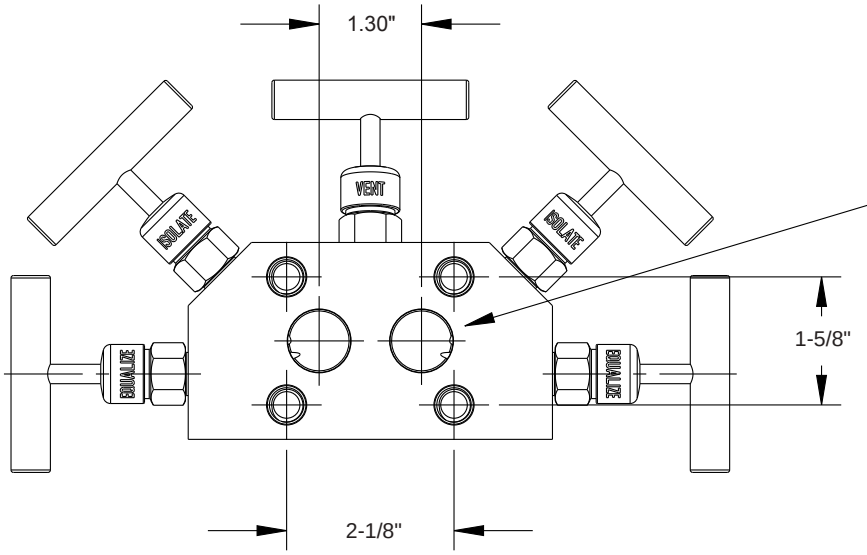

Flange-Female Natural Gas

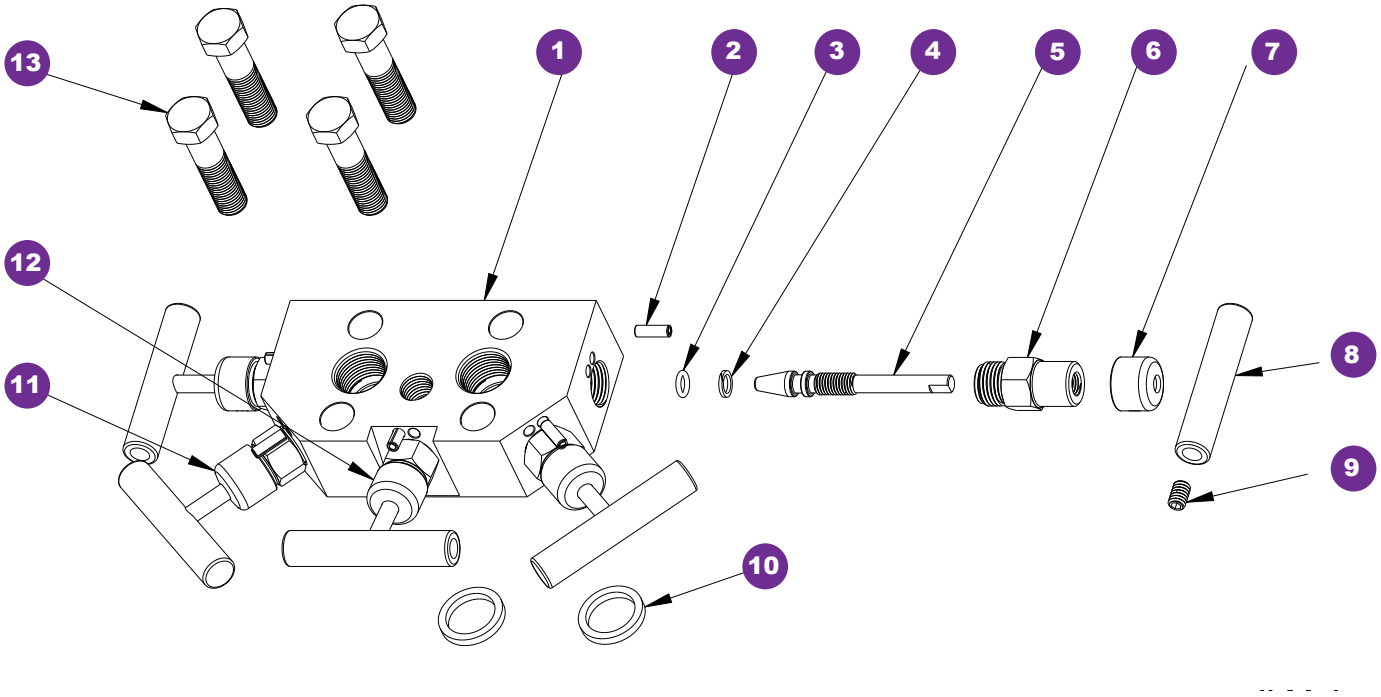

1 Valve body
2 Slotted spring pin
3 FKM o-ring
4 PTFE back-up ring
5 Valve stem
6 Valve bonnet
7 Green dust cap
8 Valve "T" handle
9 Set screw
10 Gasket ring
11 Blue dust cap
12 Red dust cap
13 Head bolt

Soft Seat/Tip (0.375" Orifice)





90° Angle option



Flare Pattern™ option



Flow Schematic

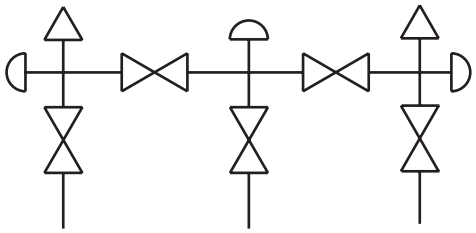

5530 SERIES

- Designed for use with differential pressure transmitters incorporating two isolation valves, two equalizing valves and a vent valve in natural gas applications
- Flare Pattern™ valve configuration provides maximum clearance for fingers during operation
- Soft tip valves feature a patented Acetal non-rotating soft tip stem, and a back-up metal-to-metal seal **(U.S. Patent 6,820,857)**
- Non-rotating stem tip standard on large bore isolation valves
- Available in block, single flange, or double flange connection for remote or direct installation
- 100% helium leak tested to 1 x 10^{-4} ml/s for performance and reliability
- Features a replaceable Acetal seat, and straight through porting for bidirectional, high capacity flow and easy roddable cleaning on the block valves
- Blow-out proof stem provides a secondary stem seal in the full open position
- FKM o-ring seal and PTFE back-up ring below the stem threads to protect from corrosion and galling
- All stem threads are rolled for strength and ease of operation
- One-piece bonnet with a metal-to-metal seal to the valve body below the bonnet threads
- Slotted spring pin to prevent accidental loosening
- Color coded vinyl dust caps for bonnets and stems

SPECIFICATIONS	
Materials	Zinc-Nickel plated carbon Steel, electropolished 316 Stainless Steel*
Connections	Flange-flange 1/2" NPT-flange 1/2" NPT-1/2" NPT Flange-flange 90° angle
Pressure ratings	6,000 psi @ 200 °F
Orifice size	0.375"
Flow coefficient	C_V 3.0
Stem seal & type	All 316 Stainless Steel stems with FKM o-ring and PTFE back-up ring below the threads
Additional features	Two static (test) ports, color coded vinyl bonnet and stem dust cap, patented soft tip stem design on equalizing and vent valves
Weight	Approximately 5.8 lb. without flange Approximately 7.5 lb. with flange 90° Angle version approximately 9.4 lb.

* All 316SS products meet the requirements of NACE MR0175/ISO 15156-3.

⚠ **WARNING:** This product can expose you to chemicals including Lead and Nickel, which are known to the State of California to cause cancer and birth defects or other reproductive harm. For more information go to www.P65Warnings.ca.gov

NOTE: All NOSHOK valve products conform to the MSS SP-99 instrument valves standards, and valves supplied with packing also conform to MSS SP-132 compression packing systems for instrument valves standard.

Adaptive Industrial Solutions | sales@adaptiveind.com | (877) 818-5009

SERIES	**5**	5-valve					
SEAT	**5**	Soft seat/tip 0.375" orifice					
PROCESS TYPE	**3**	Natural gas flow					
CONNECTION	**0**	1/2" NPT standard or flange					
VALVE TYPES	**MFC**	Flange-Female, Steel	**FFS**	Female-Female, Stainless Steel	**MMS**	Flange-Flange, Stainless Steel	
	FFC	Female-Female, Steel	**MMC**	Flange-Flange, Steel	**MMAS***	Flange-Flange 90° Angle, Stainless Steel	
	MFS	Flange-Female, Stainless Steel	**MMAC***	Flange-Flange 90° Angle, Steel			

Please consult your local NOSHOK Distributor or NOSHOK, Inc. for availability and delivery information.

* Only available in Flare Pattern™ configuration.

EXAMPLE **5 5 3 0 – MMAS**

Series.....5-valve
Seat..... Soft seat/tip
Process type..... Natural gas flow
Connection.....1/2" NPT standard
Valve type.....Flange-flange 90° Angle, Stainless Steel

To meet all of your specific application requirements, the following **additional options** are available for these manifold valves. To order all or any of these options, simply add them to the part number as follows:

ORDERING INFORMATION - ADDITIONAL OPTIONS							
BODY CONFIGURATION	**FP**	Flare Pattern™					
SOFT SEATS	**PK1**	PEEK	**KF1**	PCTFE			
O-RINGS*	**EM1**	EPDM	**KZ1**	FFKM (Perfluoroelastomer)	**NB1**	NBR	
HANDLES	**HL3**	1" Round knurled	**HL4**	1-3/8" Phenolic			

Please consult your local NOSHOK Distributor or NOSHOK, Inc. for availability and delivery information.

* Other o-ring materials available on request.

Please note that the standard o-ring in all the NOSHOK valves is FKM and the standard handles are isolation "T" handles (HL8) and equalizing/vent 1-3/8" mini "T" handles (HL7).

The handle material will always match the material of the valve, unless otherwise specified. For example, the "T" handle on the 5530-MFC will be Steel. When only the standard configuration is needed, no additional designations are necessary. Please consult the factory for special application requests.

EXAMPLE with Additional Options **5 5 3 0 – MFC – FP – PK1 – KZ1**

Series.....5-valve
Seat..... Soft seat
Process type.....Natural gas
Connection.....1/2" NPT standard or flange
Valve type..... Flange-female, Steel
Body configuration ..... Flare Pattern™
Soft seat .....PEEK
O-ring.....FFKM

Dimensions

Flange-Flange

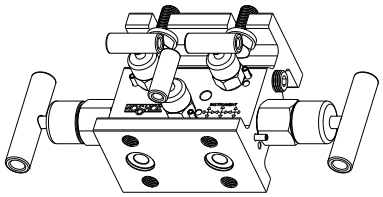

Top View

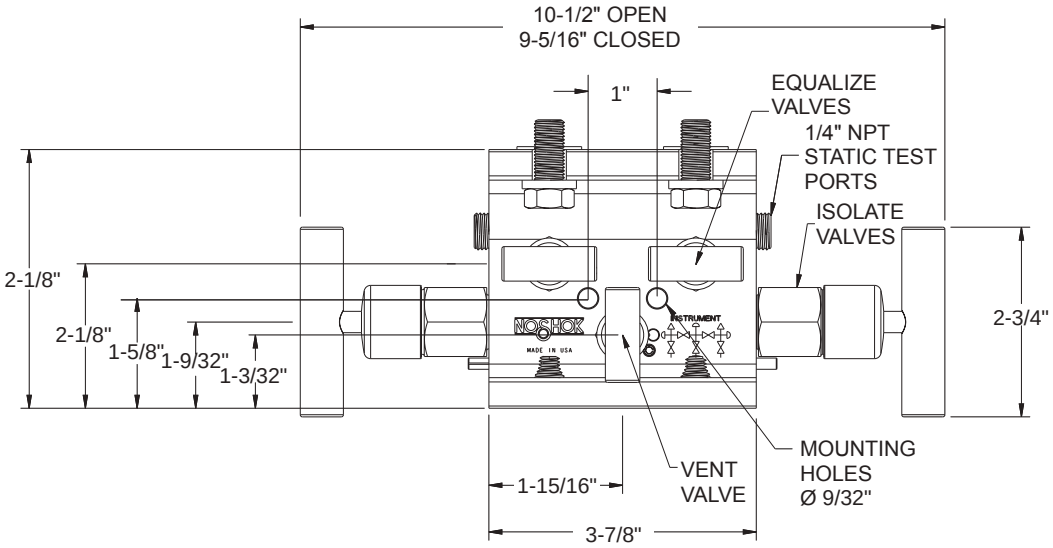

Front View

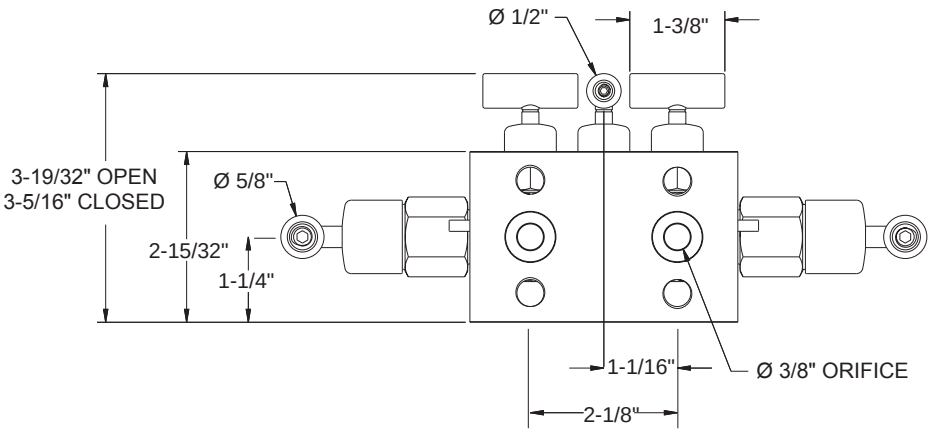

Side View

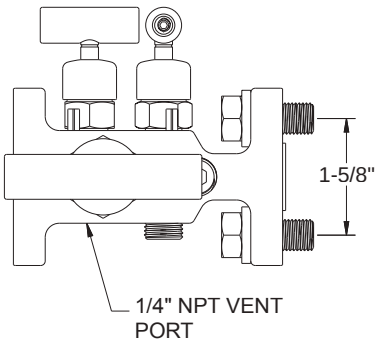

Flange-Female

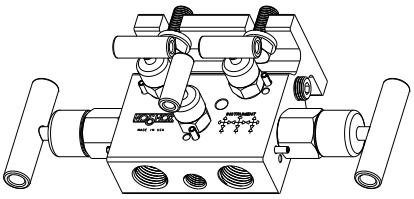

Top View

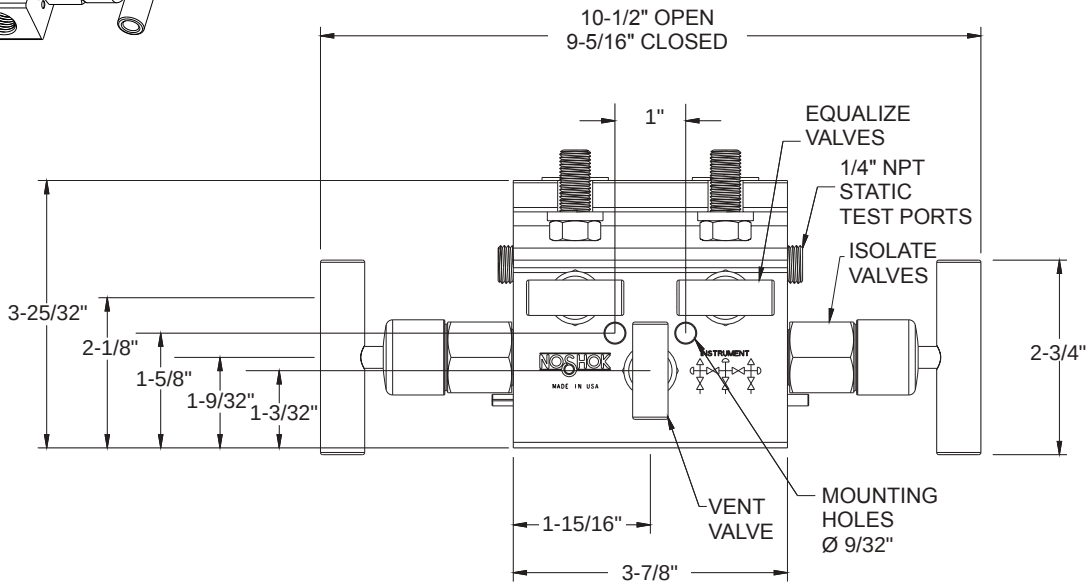

Front View

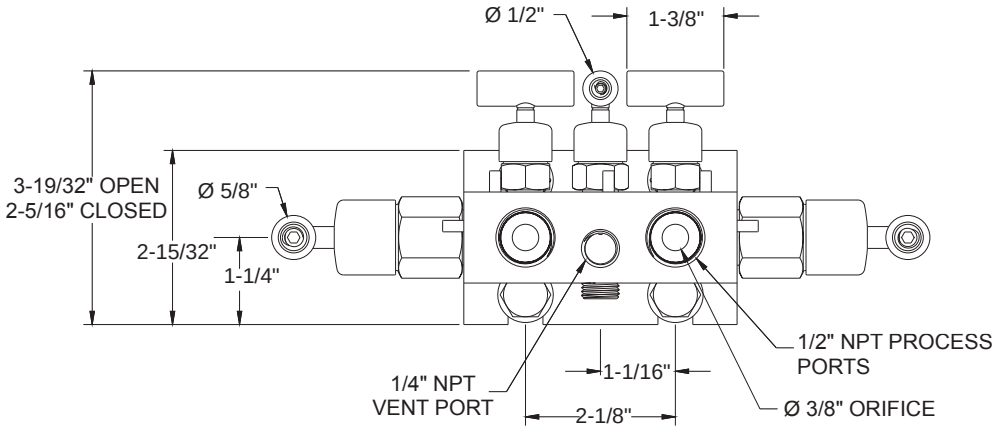

Side View

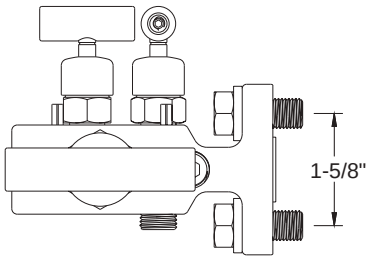

Dimensions

Female-Female

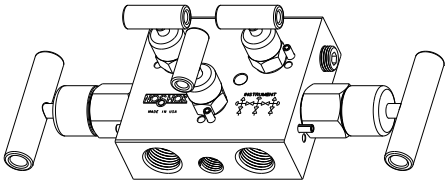

Top View

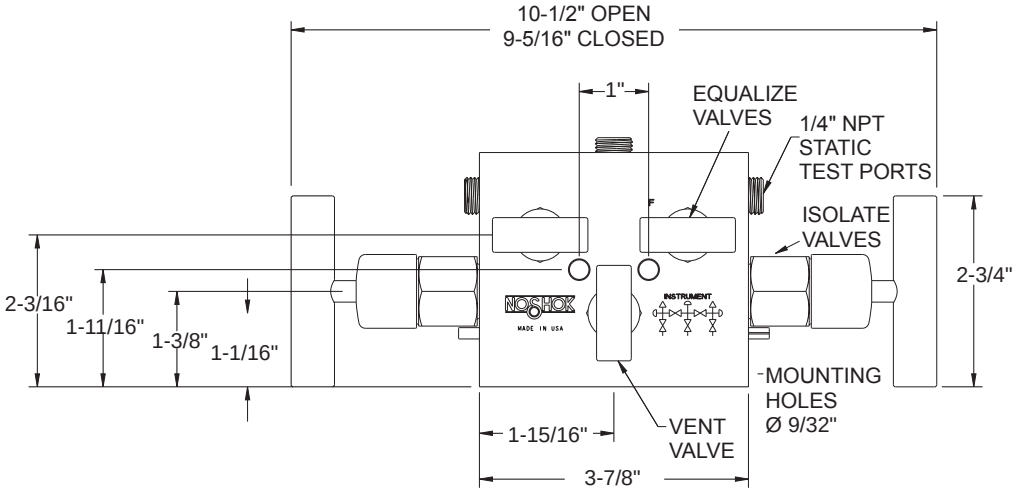

Front View

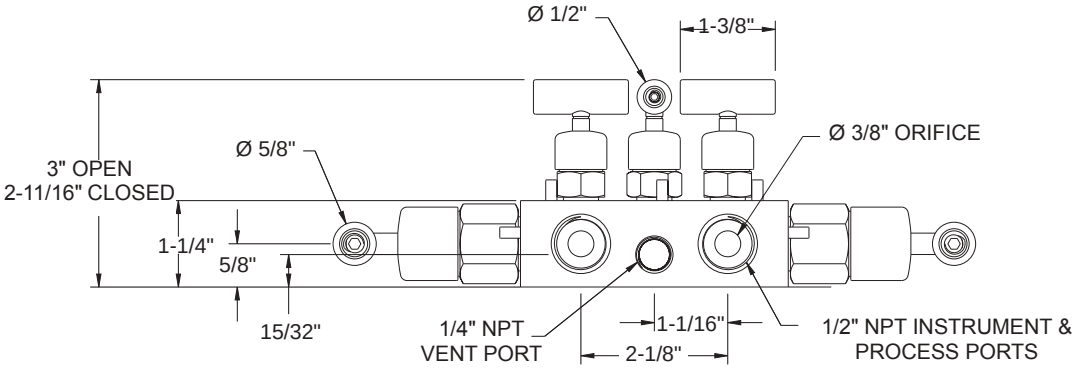

Side View

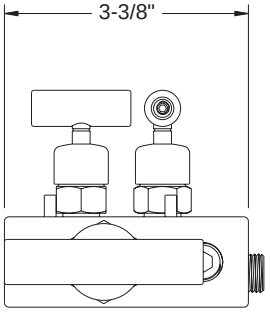

For panel mount or packing dimensions, see pg. 66.

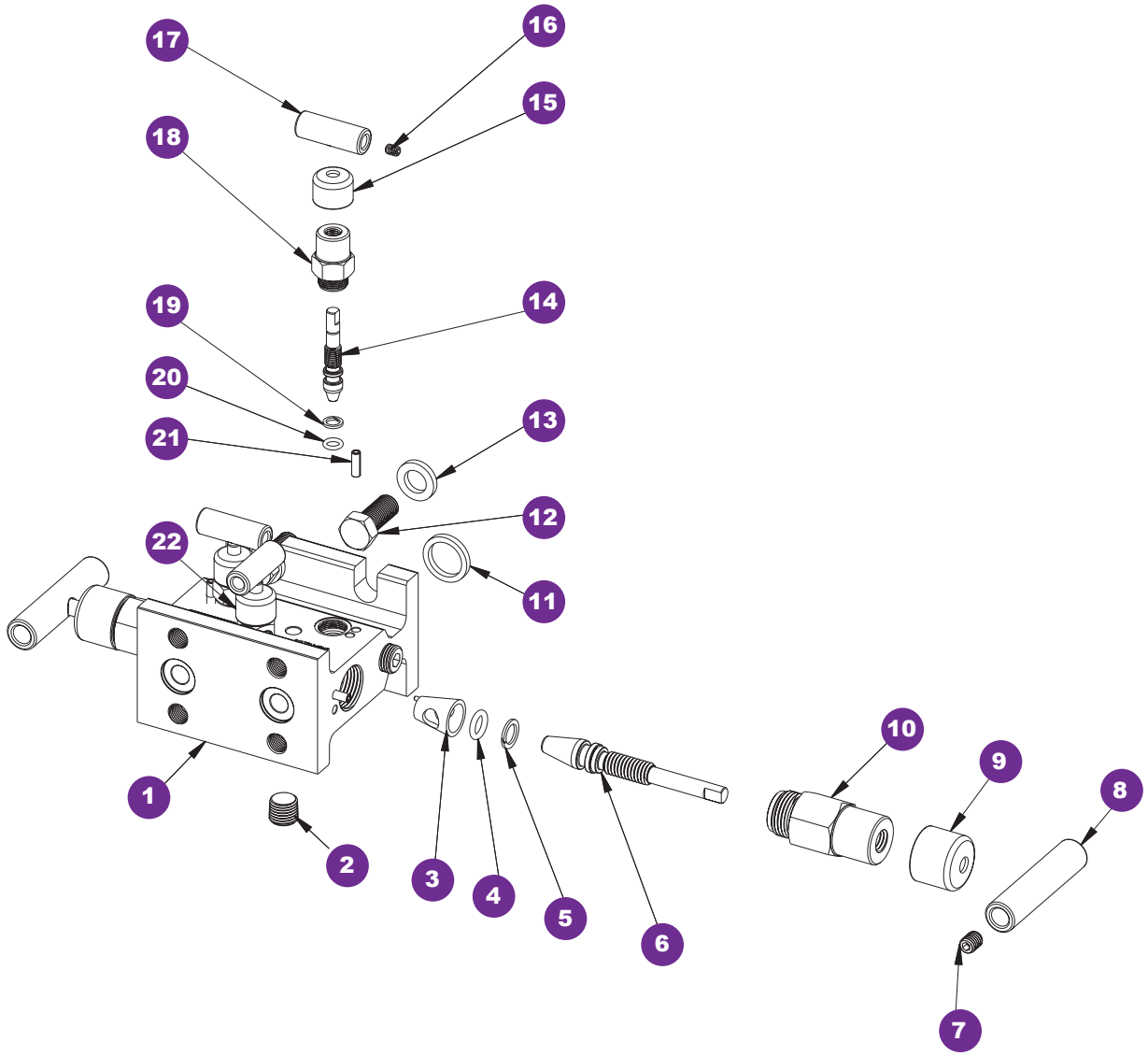

1 Valve body
2 Plug
3 Acetal seat
4 FKM o-ring
5 PTFE back-up ring
6 Non-rotating stem
7 Set screw
8 Valve “T” handle
9 Blue dust cap
10 Valve bonnet
11 Gasket ring
12 Head bolt
13 Washer
14 Soft tip stem
15 Green dust cap
16 Set screw
17 Mini valve “T” handle
18 Mini valve bonnet
19 PTFE back-up ring
20 FKM o-ring
21 Slotted spring pin
22 Red dust cap

Dimensions

Flange-Flange 90° Angle

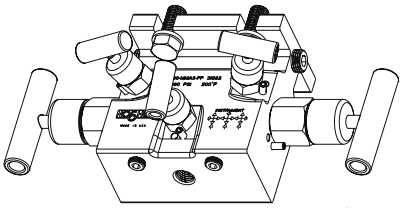

Top View

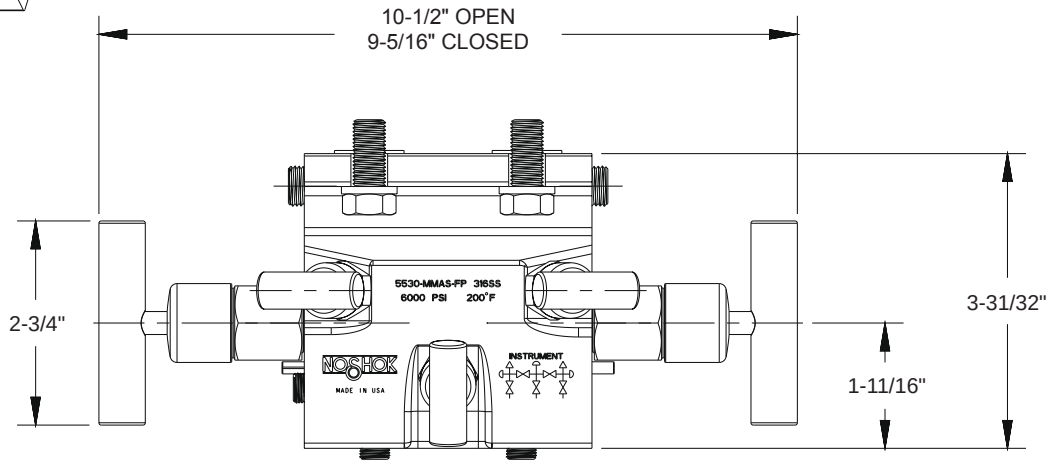

Front View

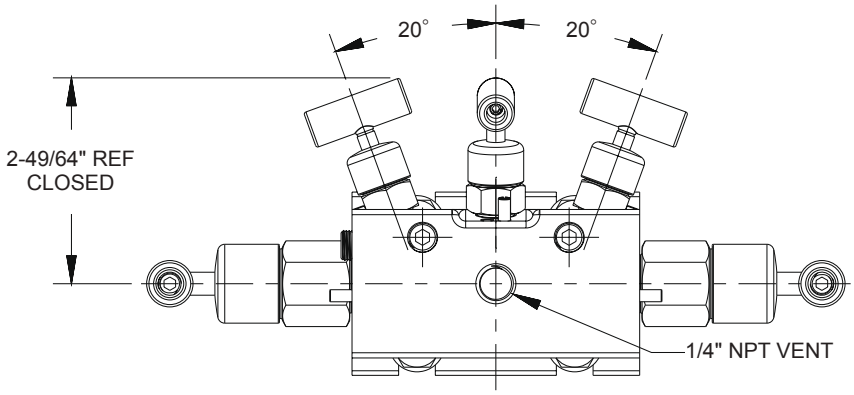

Side View

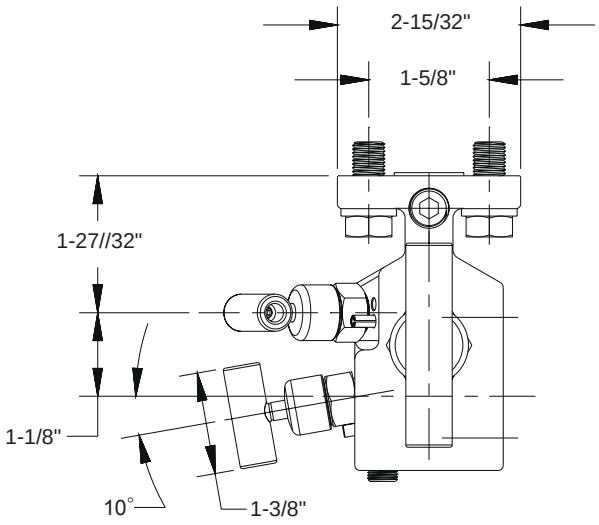

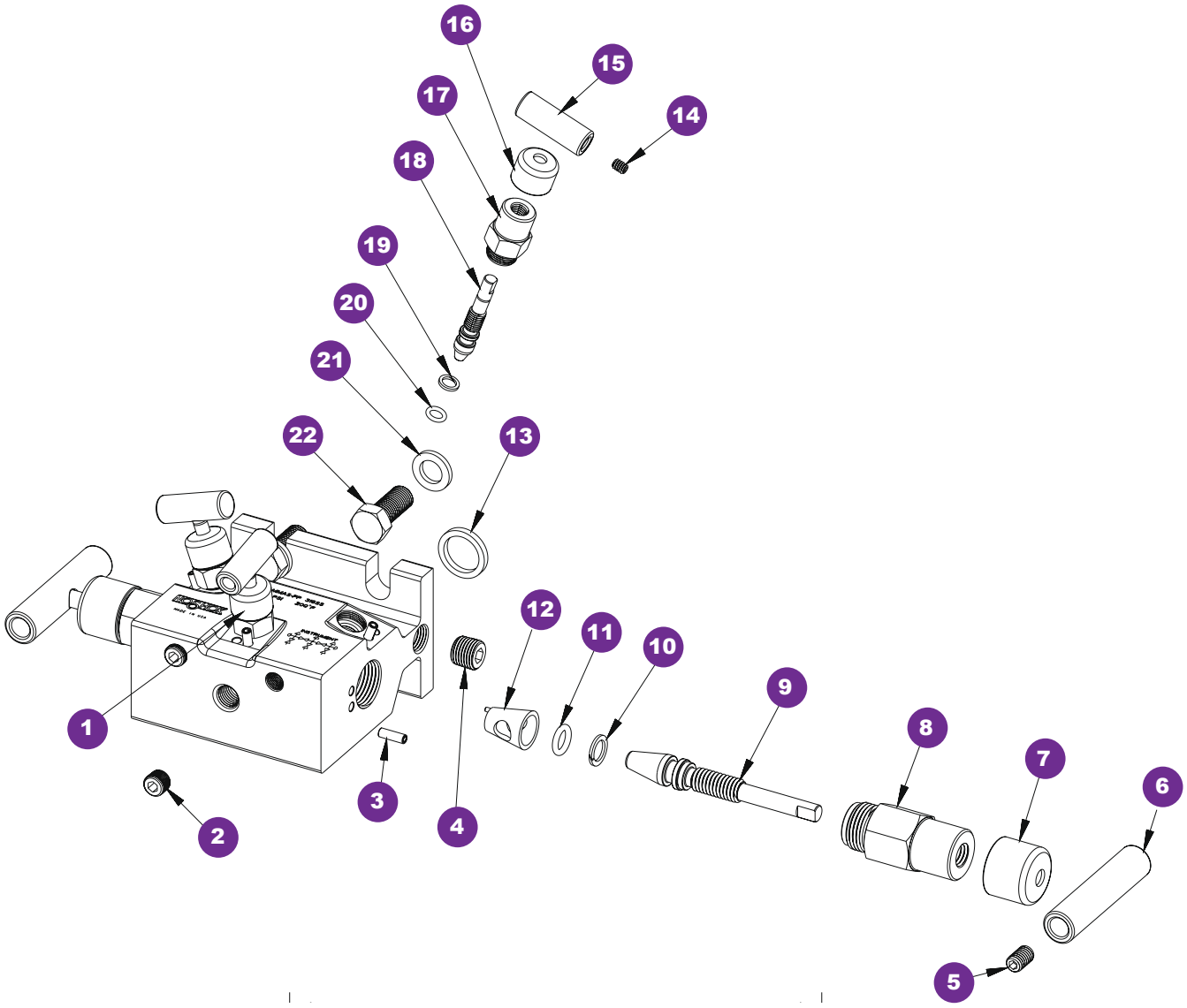

1 Red dust cap
2 Plug
3 Slotted spring pin
4 Plug
5 Set screw
6 Valve “T” handle
7 Blue dust cap
8 Valve bonnet
9 Non-rotating stem
10 PTFE back-up ring
11 FKM o-ring
12 Acetal seat
13 Gasket ring
14 Set screw
15 Mini valve “T” handle
16 Green dust cap
17 Mini valve bonnet
18 Soft tip stem
19 PTFE back-up ring
20 FKM o-ring
21 Washer
22 Head bolt

Adaptive Industrial Solutions | sales@adaptiveind.com | (877) 818-5009

Dimensions

Flare Pattern™ Flange-Flange

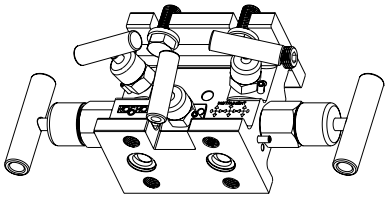

Top View

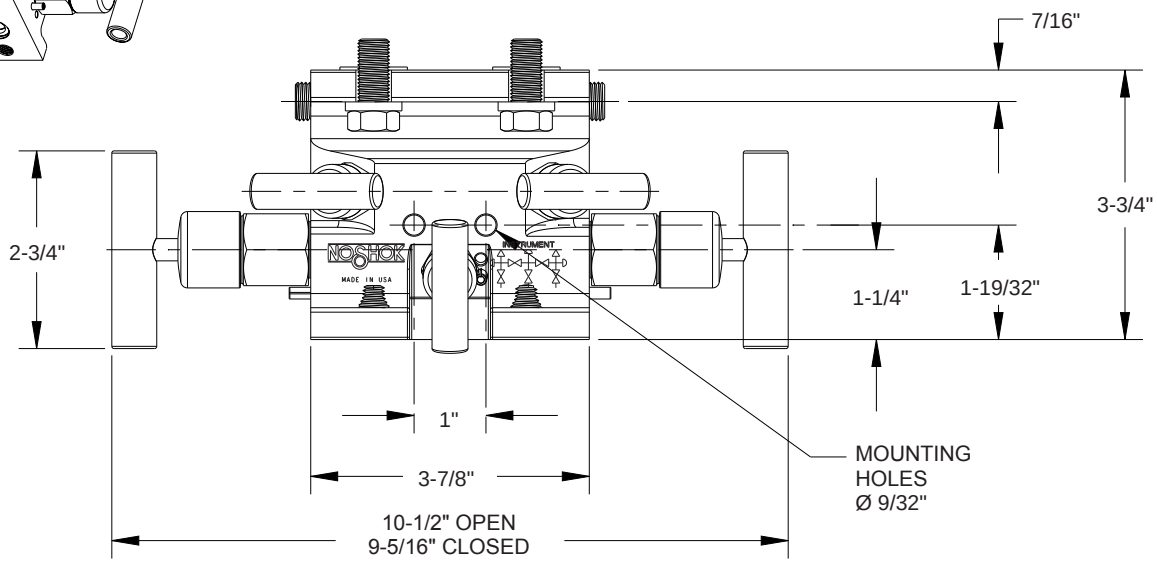

Front View

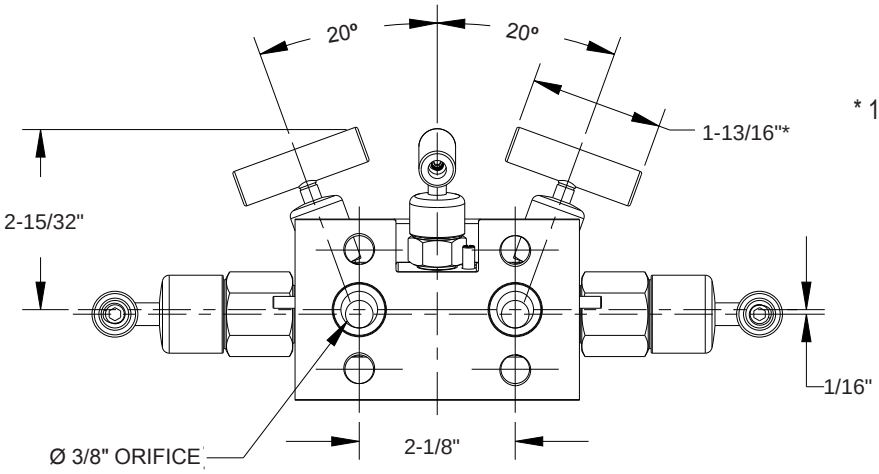

Side View

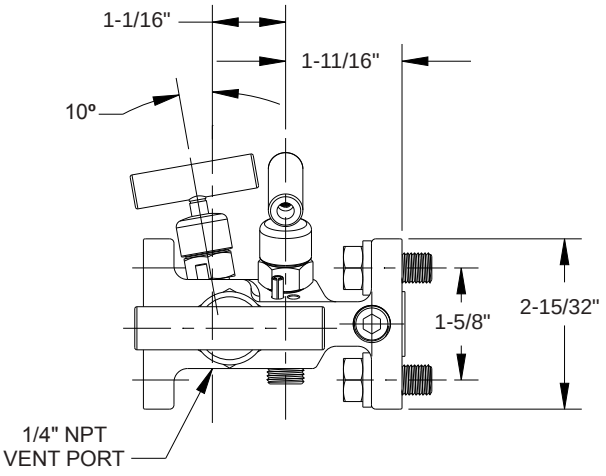

Flare Pattern™ Flange-Female

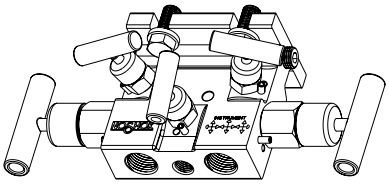

Top View

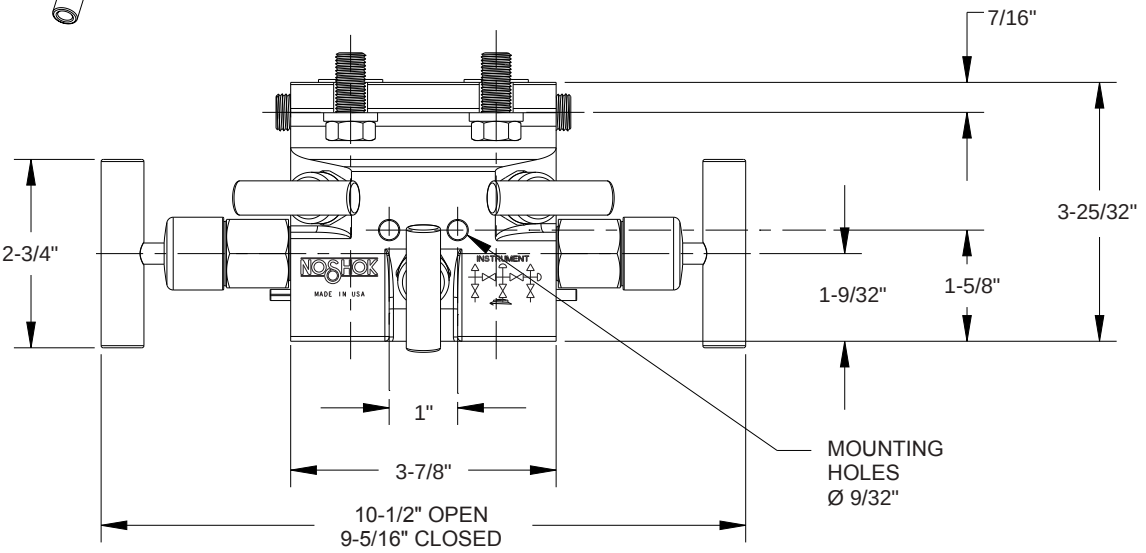

Front View

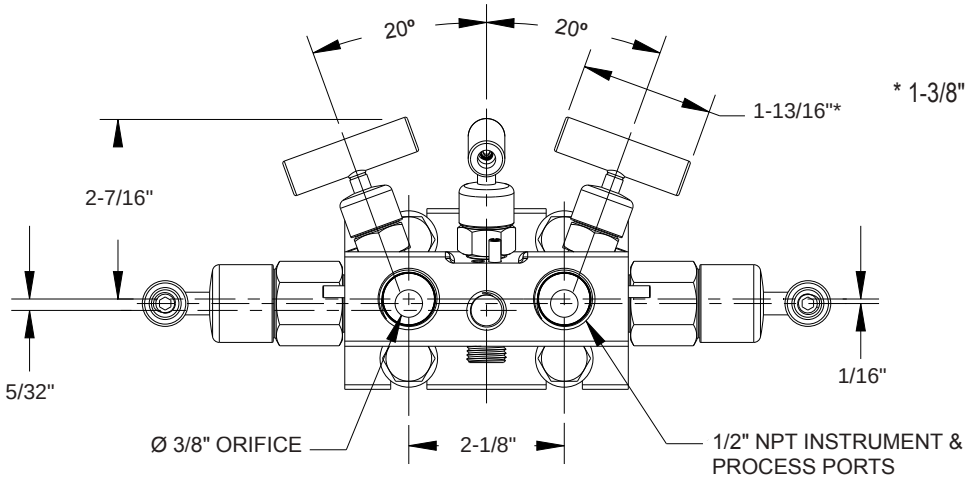

Side View

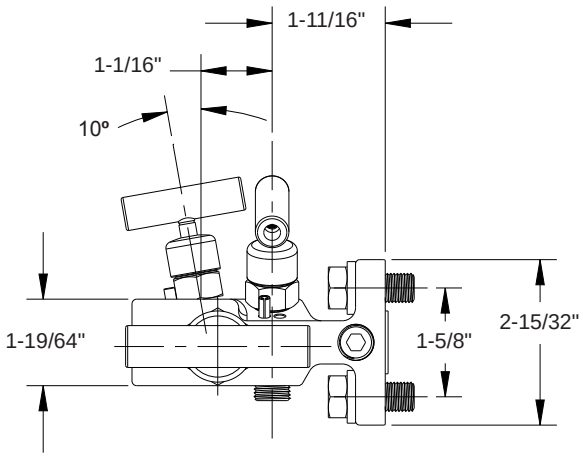

Dimensions

Flare Pattern™ Female-Female

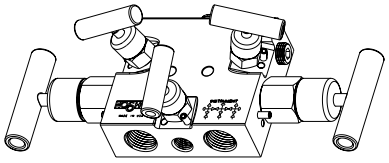

Top View

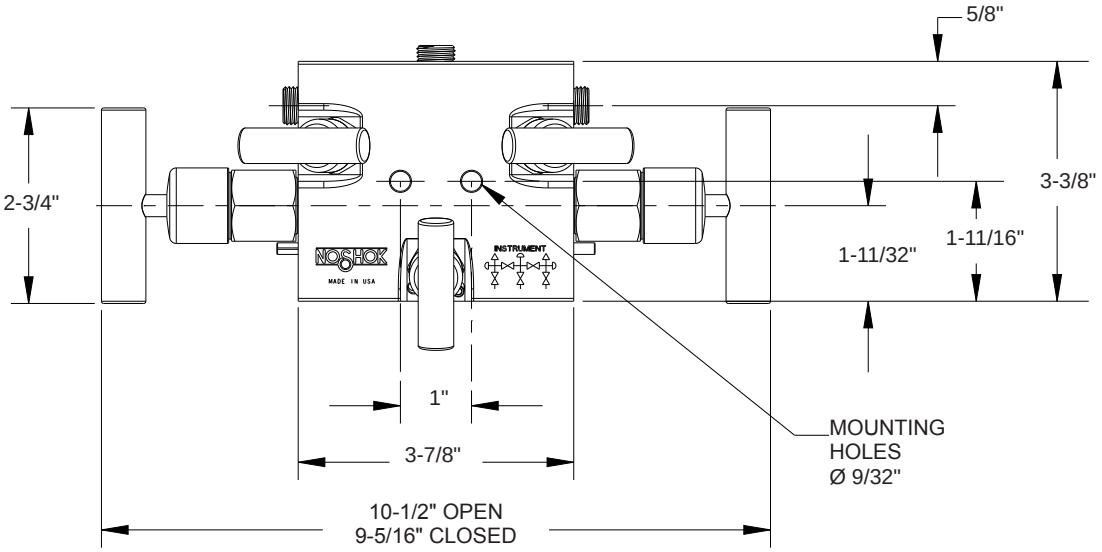

Front View

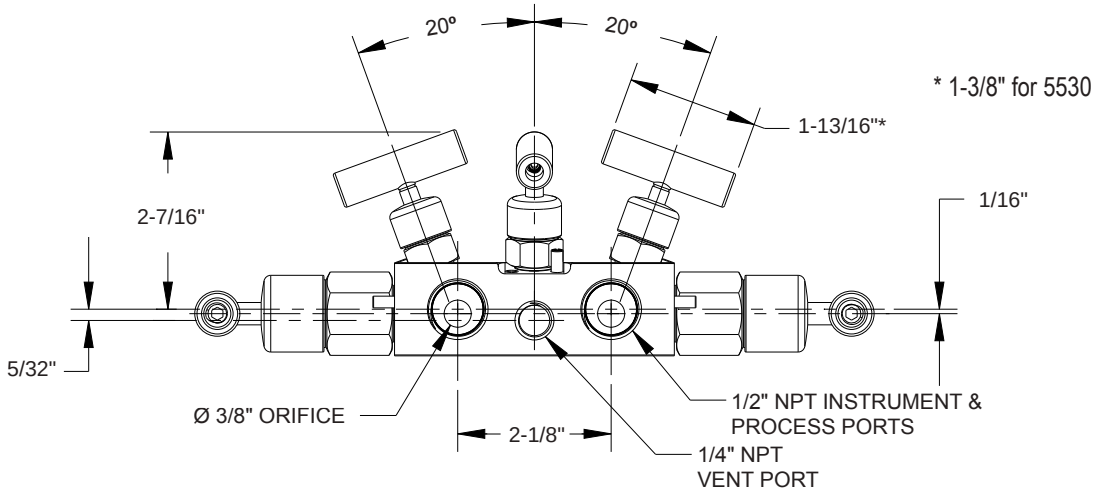

Side View

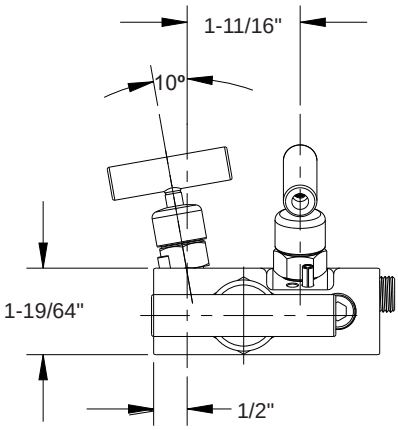

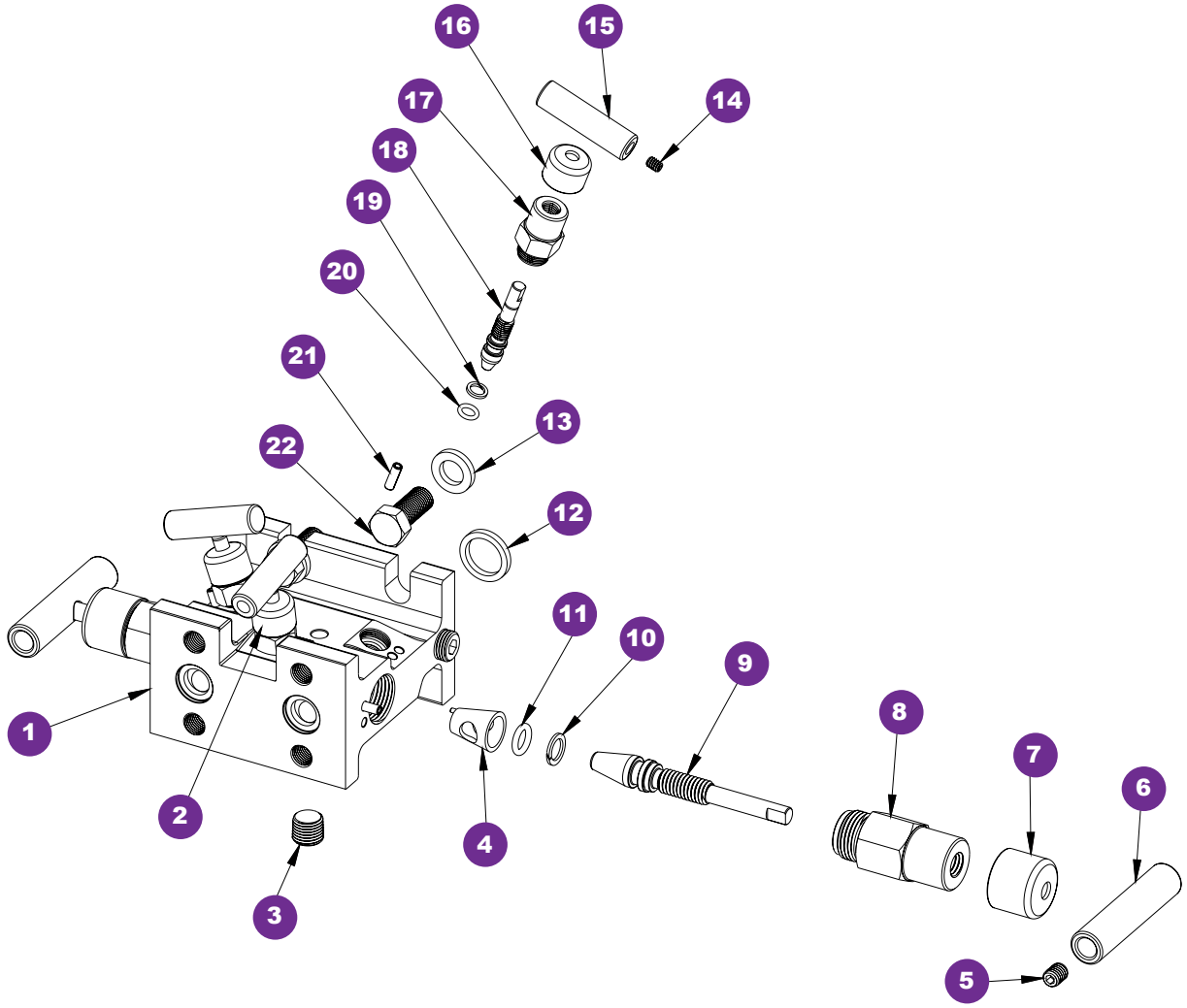

1 Flare Pattern™ valve body
2 Red dust cap
3 Plug
4 Acetal seat
5 Set screw
6 Valve “T” handle
7 Blue dust cap
8 Valve bonnet
9 Non-rotating stem
10 PTFE back-up ring
11 FKM o-ring
12 Gasket ring
13 Washer
14 Set screw
15 Mini valve “T” handle
16 Green dust cap
17 Mini valve bonnet
18 Soft tip stem
19 PTFE back-up ring
20 FKM o-ring
21 Slotted spring pin
22 Head bolt

Stabilized & Non-Stabilized



Stabilized Connectors

Note: Shown with flange adaptor for round installations.



Non-stabilized Connector

SZ SERIES

- Slotted bolt holes allow for 2-1/8" and 2-1/4" bolt spacings
- Designed to reinforce the entire installation by shifting radial-stress load away from the NPT connections
- Available in 3-3/8" and 5" lengths
- Optional dielectric barrier creates a non-conductive shield between the instrument and the orifice fitting

SPECIFICATIONS	
Materials	Zinc-Nickel plated Carbon Steel, 316 Stainless Steel*
Bolts	Carbon Steel
Connection	1/2" NPT-flange
Pressure rating	10,000 psi at 200 °F
Orifice	0.375"
Weight	Approximately 3.3 lb. (Short stabilized) Approximately 4.5 lb. (Long stabilized) Approximately 2.9 lb. (Non-stabilized)

* All 316SS products meet the requirements of NACE MR0175/ISO 15156-3.

⚠ **WARNING:** This product can expose you to chemicals including Lead and Nickel, which are known to the State of California to cause cancer and birth defects or other reproductive harm. For more information go to www.P65Warnings.ca.gov

Long Stabilized Connector

Top View

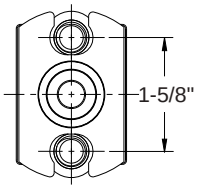

Front View

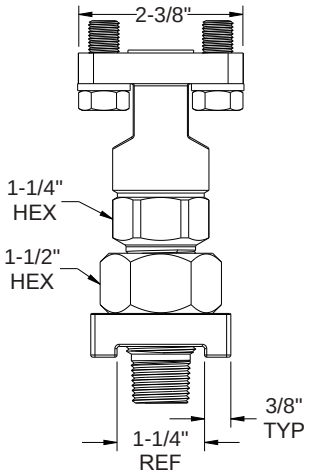

Side View

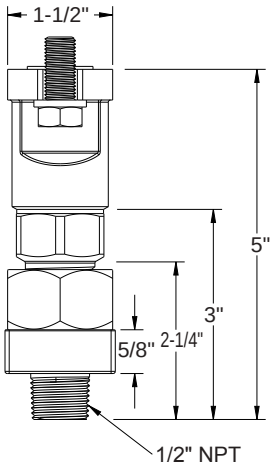

ORDERING INFORMATION					
SERIES	**SZ**	Connector			
MATERIALS	**C**	Steel	**S**	Stainless Steel	
CONNECTOR TYPES	**1**	Short stabilized pair*	**4**	Long stabilized pair with flange adaptor**	
	2	Short stabilized pair, with flange adaptor**	**5**	Non-stabilized pair	
	3	Long stabilized pair*			
OPTIONS†	**DK1**	One Piece Dielectric Gasket, Pair	**DK2**	PTFE Gasket with Dielectric Shim, Pair	
	DK1-SS	One Piece Dielectric Gasket, Pair w/SS Bolts	**DK2-SS**	PTFE Gasket with Dielectric Shim, Pair w/SS Bolts	

Please consult your local NOSHOK Distributor or NOSHOK, Inc. for availability and delivery information.

† For more information on Dielectric Kits, see page 140

* For flat installations (orifice fitting)

** For round installations (orifice flange)

EXAMPLE

SZC1 - DK1

Series.....Connector
Material.....Steel
Connector type.....Short stabilized pair
Option..... One piece Dielectric gasket, pair

Short Stabilized Connector

Top View

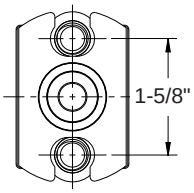

Front View

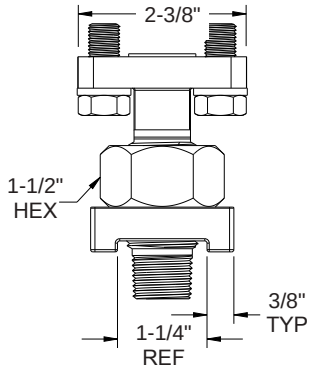

Side View

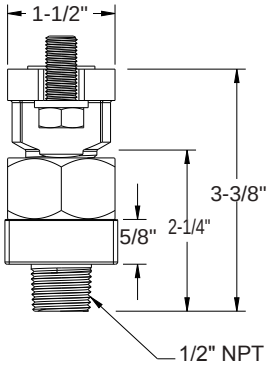

Non-Stabilized Connector

Top View

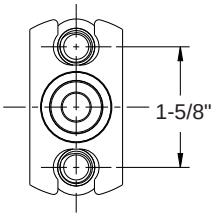

Front View

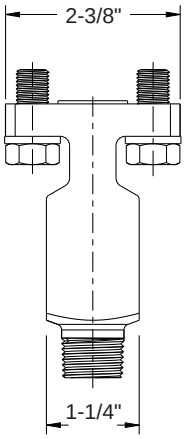

Side View

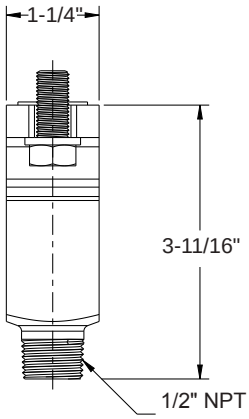

Stabilized With Integral Block Valve

SV SERIES



Note: Shown with flange adaptor for round installations.

- Block valve and stabilized tap are joined by a coupling nut which allows easy installation without requiring rotation of the valve
- Slotted bolt holes allow for 2-1/8" and 2-1/4" bolt spacings
- Designed to reinforce the entire installation by shifting radial-stress load away from the NPT connections
- 0.375" bore
- Non-rotating stem tip standard on block valves
- Blow-out proof stem provides a secondary stem seal in the full open position
- Metal body-to-bonnet seal
- FKM o-ring seal and PTFE back-up ring below the stem threads to protect from corrosion and galling
- Includes PTFE gaskets and Carbon Steel bolts for manifold installation
- Optional dielectric barrier creates a non-conductive shield between the instrument and the orifice fitting
- **Patent pending**

SPECIFICATIONS	
Materials	Zinc-Nickel plated Carbon Steel, 316 Stainless Steel*
Bolts	Carbon Steel
Connection	1/2" NPT-flange
Pressure rating	6,000 psi at 200 °F
Orifice	0.375"
Flow coefficient	C_V 3.0
Stem seal & type	All 316 Stainless Steel stems with FKM o-ring and PTFE back-up ring below the threads
Weight	Approximately 10.6 lb. (pair)

* All 316SS products meet the requirements of NACE MR0175/ISO 15156-3.

⚠ **WARNING:** This product can expose you to chemicals including Lead and Nickel, which are known to the State of California to cause cancer and birth defects or other reproductive harm. For more information go to www.P65Warnings.ca.gov

ORDERING INFORMATION				
SERIES	**SV**	Stabilized connector with integral block valve		
MATERIALS	**C**	Steel	**S**	Stainless Steel
CONNECTOR TYPES	**1**	Stabilized connector pair with integral valve*	**2**	Stabilized connector pair with integral valve, flange adaptor**
OPTIONS†	**DK1**	One Piece Dielectric Gasket, Pair	**DK2**	PTFE Gasket with Dielectric Shim, Pair
	DK1-SS	One Piece Dielectric Gasket, Pair w/SS Bolts	**DK2-SS**	PTFE Gasket with Dielectric Shim, Pair w/SS Bolts

Please consult your local NOSHOK Distributor or NOSHOK, Inc. for availability and delivery information.

† For more information on Dielectric Kits, see page 140
* For flat installations (orifice fitting)
** For round installations (orifice flange)

EXAMPLE

S V C 1 - D K 1

Series.....Connector with integral block valve
Material.....Steel
Connector type..... Stabilized connector pair with integral valve
Option .....One piece Dielectric gasket, pair

Dimensions

Stabilized Connector with Integral Block Valve

Top View

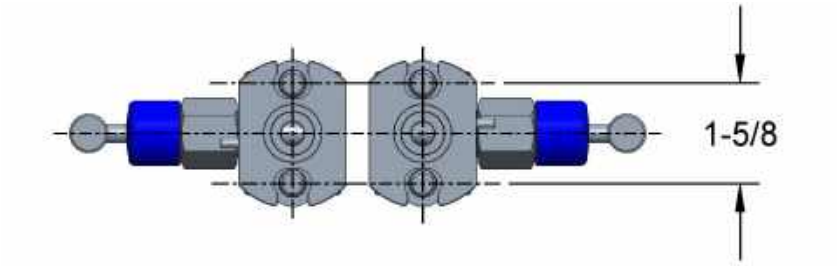

Front View

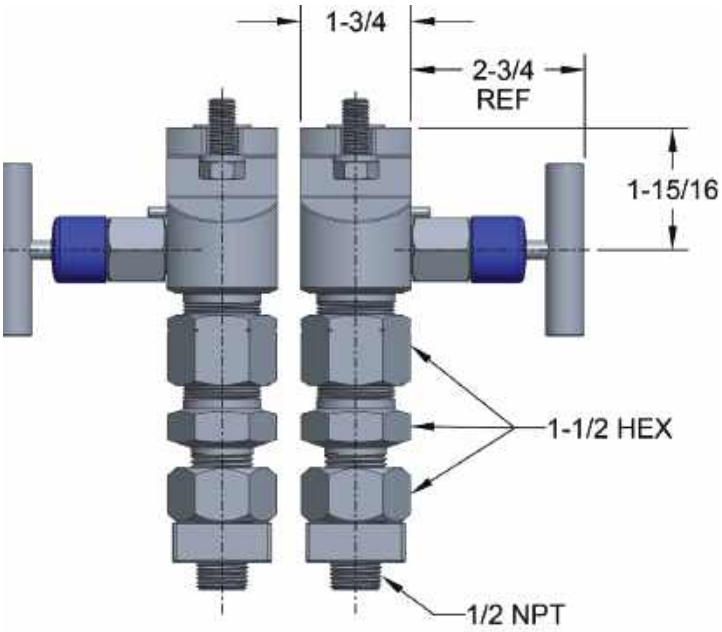

Side View

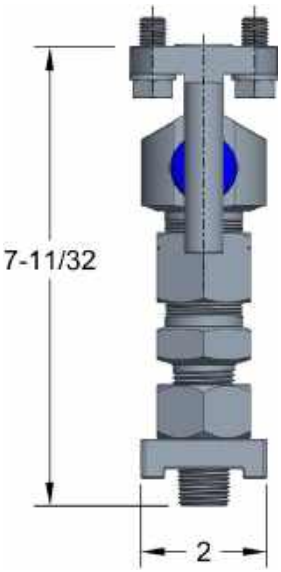

Bottom View

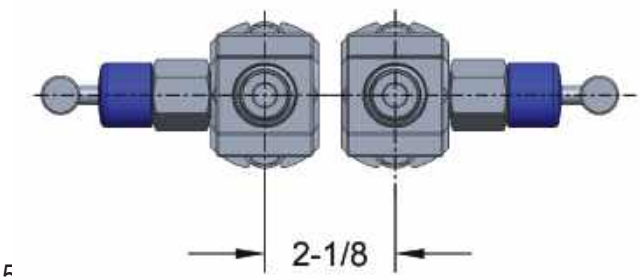

Stabilized Connector with Integral Block Valve

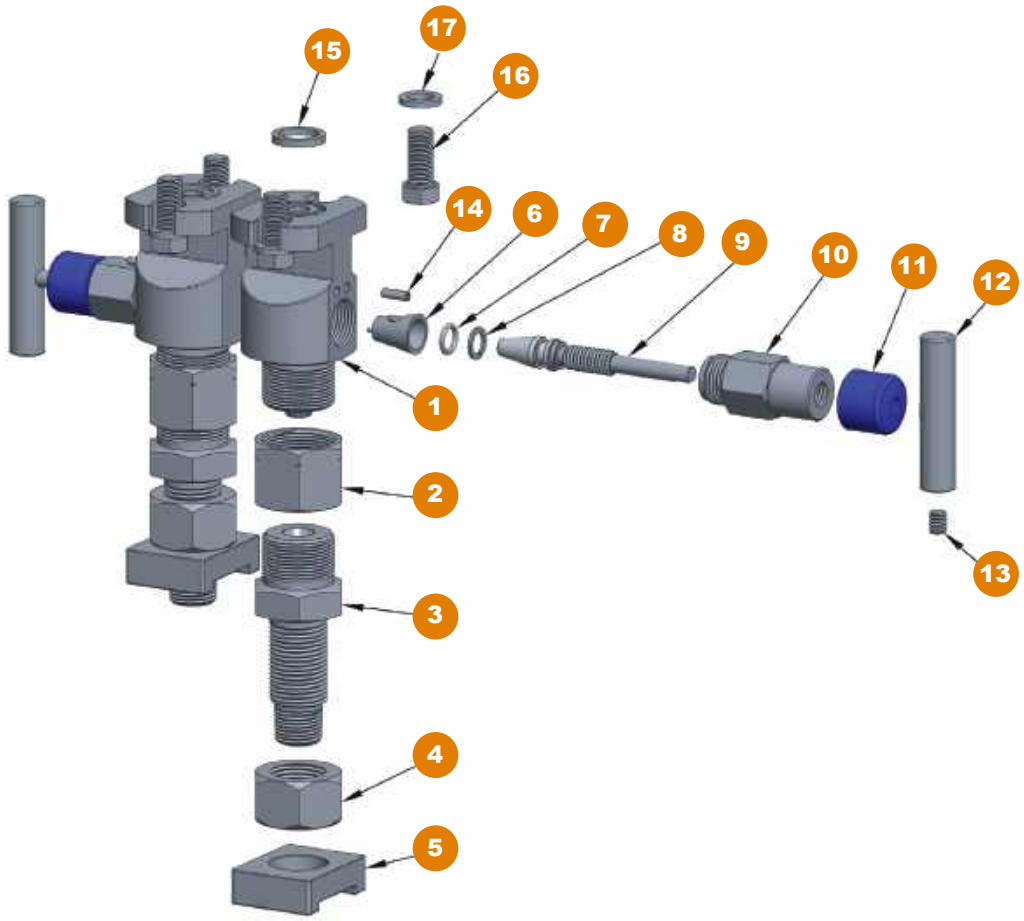

1 Stabilized valve body
2 Coupling nut
3 Tap body
4 Stabilized nut
5 Flange adapter
6 Soft seat
7 FKM o-ring
8 PTFE back-up ring
9 Non-rotating valve stem
10 Valve bonnet
11 Dust cap
12 Valve “T” handle
13 Set screw
14 Slotted spring pin
15 Gasket ring
16 Hex head bolt
17 Washer



50FA1 SERIES

- Bolt to the process side of a flange-flange manifold to allow connection of process flange taps or process root valves
- Allow flanges to be connected to threaded process piping while maintaining the ease of removal or repair of the manifold if maintenance is required
- Provide a 1/16" offset connection from the bolt holes to give connection centers of 2", 2-1/8" or 2-1/4"
- Kit Includes : (2) Futbols, (4) hex bolts 7/16"-20, (2) PTFE face seals

SPECIFICATIONS	
Materials	Zinc-Nickel plated Carbon Steel, 316 Stainless Steel*
Connection	1/2" NPT
Weight	Approximately 2.1 lb.

* All 316SS products meet the requirements of NACE MR0175/ISO 15156-3.

For products that contain Brass or Carbon Steel:

⚠ **WARNING:** This product can expose you to chemicals including Lead, which is known to the State of California to cause cancer and birth defects or other reproductive harm. For more information go to www.P65Warnings.ca.gov

For products that contain Stainless Steel:

⚠ **WARNING:** This product can expose you to chemicals including Nickel, which is known to the State of California to cause cancer. For more information go to www.P65Warnings.ca.gov

ORDERING INFORMATION				
SERIES	**50FA1**	Futbol		
MATERIALS	**CS**	Steel	**SS**	316 Stainless Steel

Please consult your local NOSHOK Distributor or NOSHOK, Inc. for availability and delivery information.

EXAMPLE **50FA1CS**

Series..... Futbol
Material..... Steel

Futbols

Front View

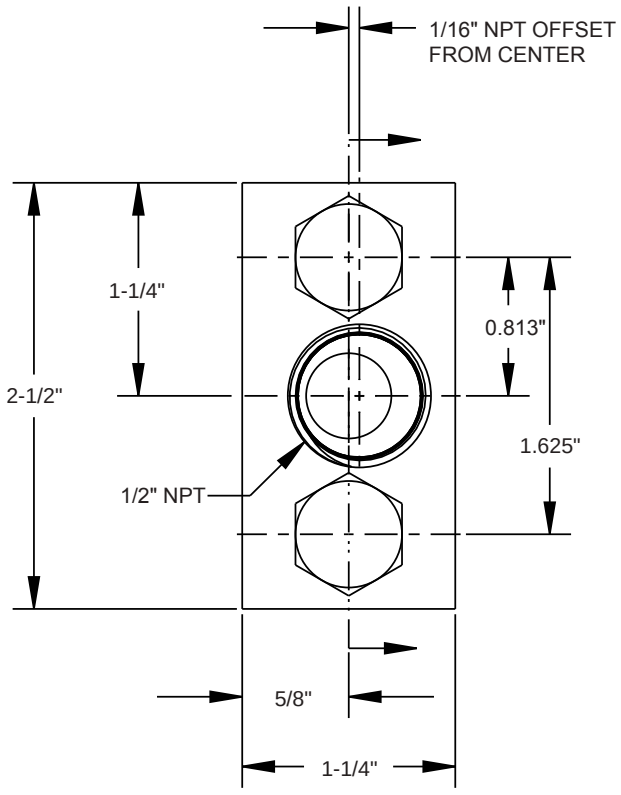

Side View

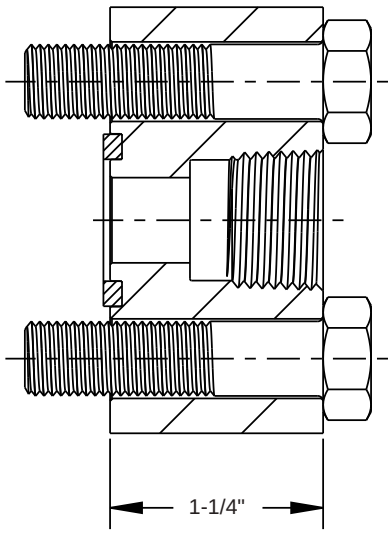



SA SERIES

- Joins threaded ports to a flange style connection
- Often used to join the NPT port of a static transmitter with a flange mounted connection on a differential pressure to static adapter plate
- Available in Zinc-Nickel plated Steel and electropolished 316 Stainless Steel

SPECIFICATIONS	
Materials	Zinc-Nickel plated Steel, 316 Stainless Steel*
Connections	1/2" NPT Male-flange, 1/2" NPT Female-flange

* All 316SS products meet the requirements of NACE MR0175/ISO 15156-3.

For products that contain Brass or Carbon Steel:

⚠ **WARNING:** This product can expose you to chemicals including Lead, which is known to the State of California to cause cancer and birth defects or other reproductive harm. For more information go to www.P65Warnings.ca.gov

For products that contain Stainless Steel:

⚠ **WARNING:** This product can expose you to chemicals including Nickel, which is known to the State of California to cause cancer. For more information go to www.P65Warnings.ca.gov

ORDERING INFORMATION				
SERIES	**SA**	Static adaptor		
MATERIALS	**C**	Steel	**S**	316 Stainless Steel
CONNECTIONS	**1**	1/2" NPT Female - Flange	**2**	1/2" NPT Male - Flange

Please consult your local NOSHOK Distributor or NOSHOK, Inc. for availability and delivery information.

EXAMPLE **S A C – 1**

Series.....Static Adaptor
Material.....Steel
Connection.....1/2" NPT Female - Flange

Static Adaptor, Female NPT

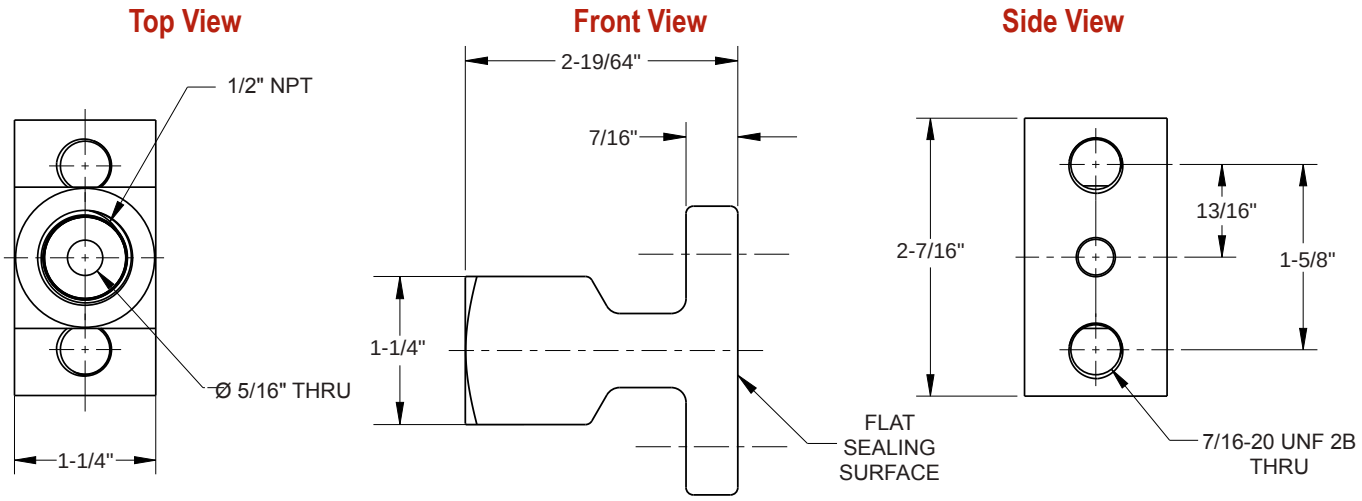

Static Adaptor, Male NPT

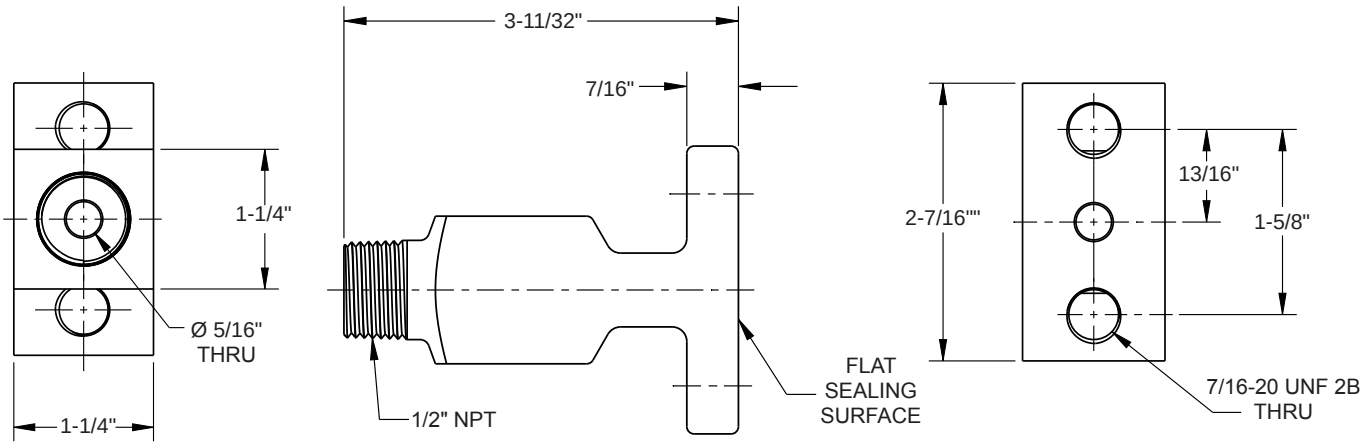

Manifold Valve Accessories

DIELECTRIC KITS

The dielectric kit is designed to maintain the integrity and reliability of the pipeline and piping system through safety and corrosion protection. Dielectric kits provide a non-conductive barrier between the process piping and the instrument and isolate components from the effects of electrical current. By eliminating metal-to-metal contact, current is halted to prevent corrosion and aid in the cathodic protection of the system.



DK-1

DK1

- Single piece design combining a Acetal sealing gasket and Acetal dielectric shim
- Bolts, washers and dielectric bushings are included with the kits
- Seal rings or o-rings not required

DK2

- Used as an alternative to a one piece design when a separate sealing gasket or o-ring is required
- Two piece design consisting of a PTFE sealing gasket and PVC dielectric shim
- Bolts, washers and dielectric bushings are included with the kits



DK-2

Specifications

- Material: Acetal PVC
- Max operating temp 150 °F
- Dielectric strength exceeds 1/32 air arc gap approximately 2,500 Vdc

MANIFOLD MOUNTING KIT

The manifold mounting kit is designed for direct or remote mounting to a two inch pipe stand. It can be used with any NOSHOK 2, 3 or 5-valve manifold by mounting a Steel or Stainless Steel bracket directly to the manifold body. See page 142 for mounting diagrams.



Δ PRESSURE TO STATIC ADAPTOR

Used on gas pipelines, the differential pressure to static adaptor plate is used to mount a differential pressure transmitter and a static pressure transmitter to a five valve flange-flange manifold. They are available in Zinc-Nickel plated Steel, electropolished Stainless Steel. An integral mini style bleed valve is incorporated in the plate and a 1/4" NPT vent plug is provided. The mini style bleed valve is equipped with a FKM o-ring and PTFE back-up ring below the stem threads to protect against corrosion and galling. Stem threads are rolled for greater strength and ease of operation and all NOSHOK valves are 100% helium leak tested for guaranteed reliability. Maximum pressure rating of 10,000 psi for Steel & Stainless models.



Δ PRESSURE TO Δ PRESSURE ADAPTORS

NOSHOK differential pressure to differential pressure adaptors allow two differential pressure transmitters to be mounted on a single set of orifice taps. This configuration is ideal for applications such as bi-directional flow, and custody transfer where only a single set of orifice taps is available. Multiple adaptors are available for various application configurations and space restrictions.

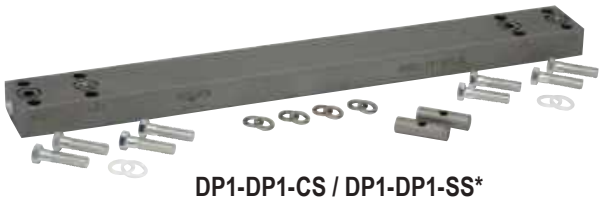

DP1-DP1-CS / DP1-DP1-SS*
3/8" bore, 23" length



DP2-DP2-CS / DP2-DP2-SS*
3/8" bore, 9" length

VERTICAL TO HORIZONTAL ADAPTOR KIT

The Vertical to Horizontal Adaptor Kit converts vertically mounted Stabilized Connectors to a horizontal position for mounting additional valves and instrumentation.



VHC/VHS*

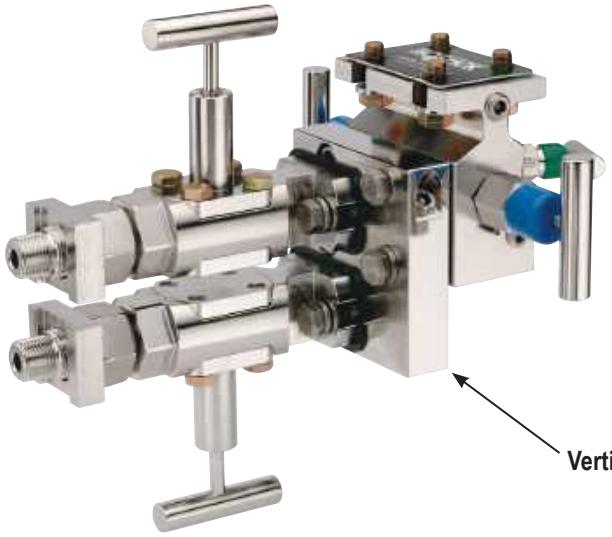

Vertical to Horizontal Adaptor Kit

* All 316SS products meet the requirements of NACE MR0175/ISO 15156-3.

For products that contain Brass or Carbon Steel:

WARNING: This product can expose you to chemicals including Lead, which is known to the State of California to cause cancer and birth defects or other reproductive harm. For more information go to www.P65Warnings.ca.gov

For products that contain Stainless Steel:

WARNING: This product can expose you to chemicals including Nickel, which is known to the State of California to cause cancer. For more information go to www.P65Warnings.ca.gov

Mounting Diagrams for 2000, 3000 & 5000 Series Manifold Valves

MK1-CS1 Steel / MK1-SS2 Stainless Steel Mounting Kit

Flange-Flange (2000 & 3000 Series Except 3510)

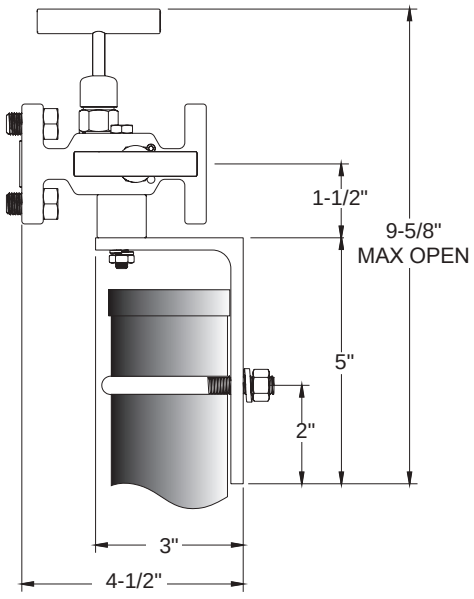

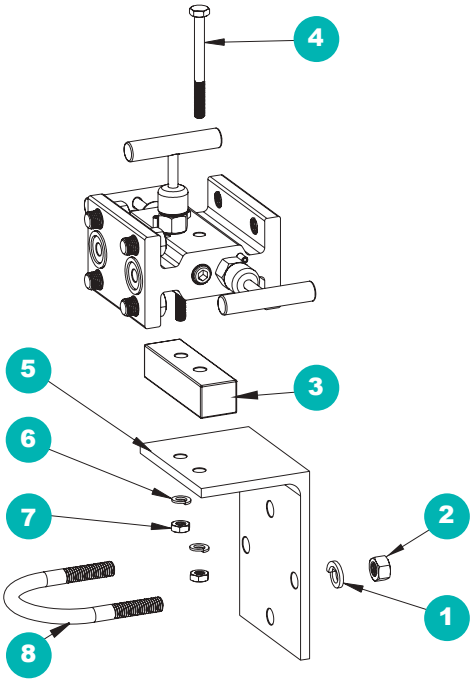

1 Lock washer
2 Nut
3 Spacer
4 Bolt
5 Bracket
6 Lock washer
7 Nut
8 U-bolt

MK2-CS1 Steel / MK2-SS2 Stainless Steel Mounting Kit

Flange-NPT (2000 & 3000 Series Except 3510), NPT-NPT (3000 Series Except 3510)

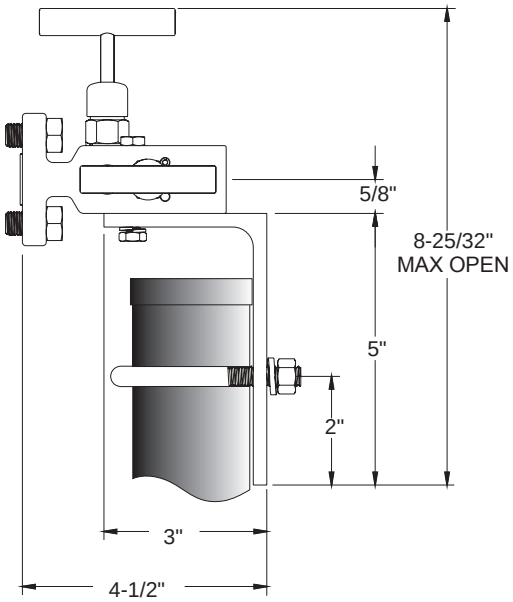

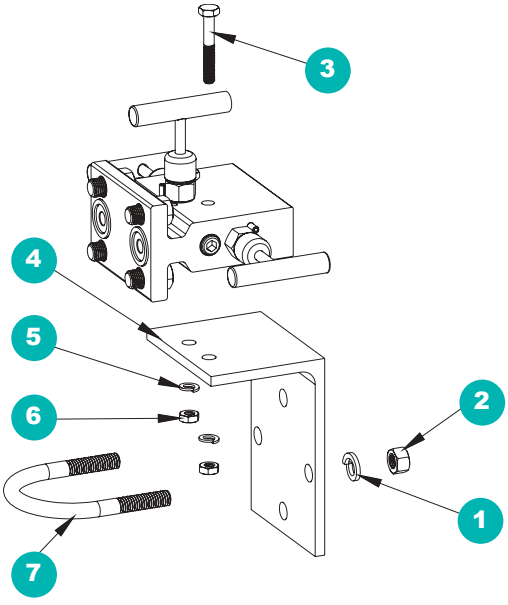

1 Lock washer
2 Nut
3 Bolt
4 Bracket
5 Lock washer
6 Nut
7 U-bolt

MK3-CS1 Steel / MK3-SS2 Stainless Steel Mounting Kit

Flange-Flange (3510 & 5000 Series)

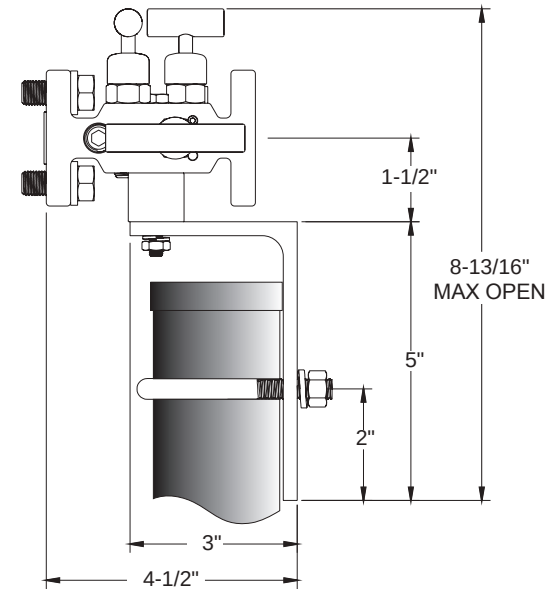

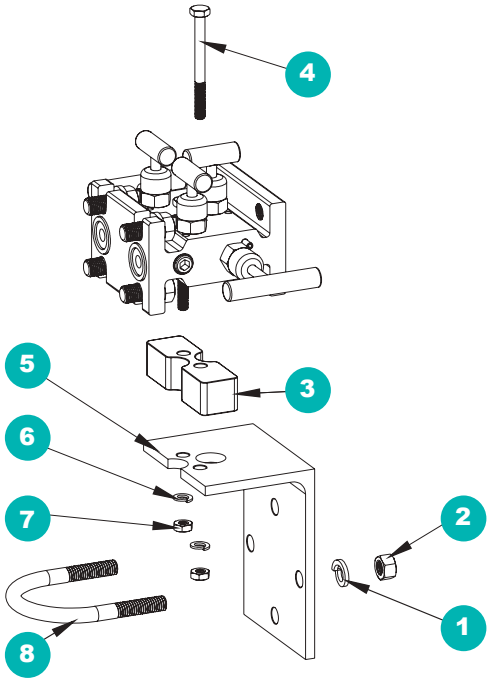

1 Lock washer
2 Nut
3 Spacer
4 Bolt
5 Bracket
6 Lock washer
7 Nut
8 U-bolt

MK4-CS1 Steel / MK4-SS2 Stainless Steel Mounting Kit

Flange-NPT (3510 & 5000 Series), NPT-NPT (2000, 3510 & 5000 Series)

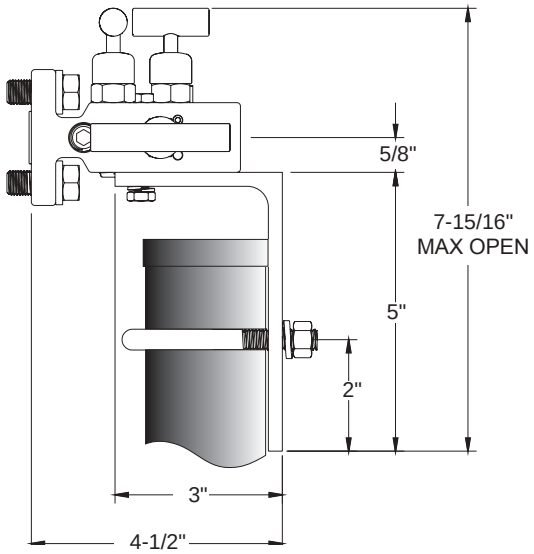

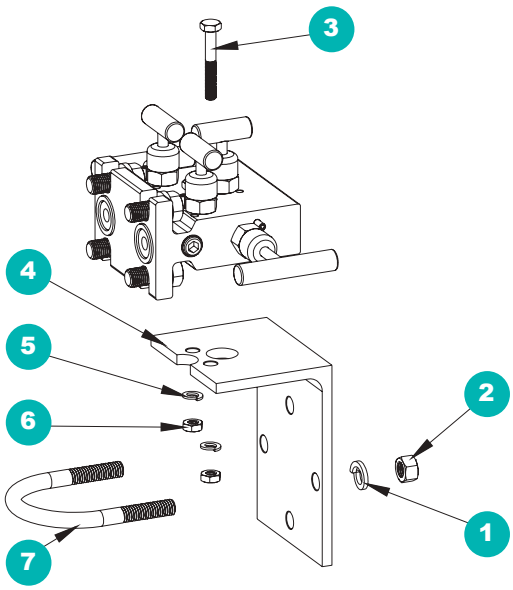

1 Lock washer
2 Nut
3 Bolt
4 Bracket
5 Lock washer
6 Nut
7 U-bolt

NOSHOK Needle Valves Reference Chart

		Mini		Multiport		Standard		Block & Bleed		Bleed		2-Valve Block & Bleed		3-Valve Double Block & Bleed
		Hard Seat	Soft Tip	Hard Seat	Soft Seat	Hard Seat	Soft Seat	Hard Seat	Soft Seat	Hard Seat	Soft Tip	Hard Seat	Soft Seat/Tip	Hard Seat
	SERIES	100	150	200	300	400	500	600	700	800	850	2070	2170	3070
Materials	Zinc-Nickel plated Steel	•	•	•	•	•	•	•	•	•	•	•	•	•
	Electropolished 316 Stainless Steel	•	•	•	•	•	•	•	•	•	•	•	•	•
	360 Brass	•	•							•	•			
Connections	1/8" NPT	•	•											
	1/4" NPT	•	•			•	•	•	•	•	•	•	•	•
	3/8" NPT					•	•							
	7/16"-20 UNF 2B	•	•			•								
	1/2" NPT			•	•	•	•	•	•	•	•	•	•	•
	1/2" NPT male - 1/4" NPT female						•							
	9/16"-18 UNF 2B	•	•											
	3/4" NPT					•	•							
	3/4" NPT male - 1/2" NPT female			•	•									
	1" NPT					•	•							
	1-1/4" NPT					•	•							
	1-1/2" NPT					•	•							
Valve Type	Male-Male	•	•											
	Male-Female	•	•	•	•	•	•	•	•			•	•	•
	Female-Female	•	•			•	•	•	•			•	•	•
	Female-Male											•	•	•
	Male-Male Angle	•	•											
	Male-Female Angle	•	•			•								
	Female-Female Angle					•								
	Male									•	•			
	Male-Female Extended											•	•	•
	Female-Male Extended											•	•	•
	Female-Female Extended											•	•	•
	Flange-Female													
	Flange-Flange													
Pressure Ratings	3,000 psi		•							•	•			
	6,000 psi	•	•		•		•		•	•	•		•	
	10,000 psi	•		•		•		•				•		•
Orifice Size	0.141"													
	0.156"													
	0.172"	•	•											
	0.187"			•	•	•	•	•	•			•	•	•
	0.375"													
	0.438"					•	•							
Flow Coefficient (Cv)	0.38													
	0.42	•	•											
	0.44			•		•		•				•		•
	0.64				•									
	0.76						•		•				•	
	2.70					•								
	3.00													
	4.00						•							
Stem Seal	FKM	•	•	•	•	•	•	•	•	•	•	•	•	•
	PTFE	•	•	•	•	•	•	•	•	•	•	•	•	•
	EPDM	•	•	•	•	•	•	•	•	•	•	•	•	•
	FFKM	•	•	•	•	•	•	•	•	•	•	•	•	•
	NBR	•	•	•	•	•	•	•	•	•	•	•	•	•
Packings	PTFE	•	•	•	•	•	•	•	•	•	•	•	•	•
	Graphite	•		•		•		•		•		•		•
Soft Seats	Acetal				•		•		•				•	
	PEEK				•		•		•				•	
	PCTFE				•		•		•				•	
Stem Tips	Rotating (316 Stainless)	•		•	•	•	•	•	•	•		•	•	•
	Acetal		•								•		•	
	Non-rotating (316 Stainless)	•		•	•	•	•	•	•	•	•	•	•	•
	Ball (440C Stainless)	•		•		•		•		•		•		•
	Ball (carbide)	•		•		•		•		•		•		•
	Ball (ceramic)	•		•		•		•		•		•		•
	Ball (Monel)	•		•		•		•		•		•		•
	Regulating hard	•		•		•		•				•		•
	PCTFE		•								•			
	PEEK		•								•			
	Regulating Acetal		•											
	Regulating PCTFE		•											
	Regulating PEEK		•											
Handles	1-13/16" Mini "T" - HL1	•	•	•								•	•	•
	2-1/2" "T" - HL2	•		•	•	•	•	•	•	•		•	•	•
	1" Round Knurled - HL3	•	•							•	•	•	•	•
	1-3/8" Phenolic - HL4	•		•	•	•	•	•	•	•		•	•	•
	1-3/4" Phenolic - HL5	•		•	•	•	•	•	•	•		•	•	•
	1-3/8" Mini "T" - HL7									•	•			
	2-3/8" Phenolic - HL9					•	•							
Panel Mountings	1 Nut	•	•	•	•	•	•	•	•					
	2 Nuts	•	•	•	•	•	•	•	•					

NOSHOK Manifold Valves Reference Chart (Continued on next page)

		Static Pressure Block & Bleed		Liquid Level		Static Pressure Narrow Block & Bleed				Static Pressure Mini Block & Bleed	
		Hard Seat	Soft Seat	Hard Seat	Soft Seat	Hard Seat		Soft Seat		Hard Seat	Soft Tip
	SERIES	2000	2100	2020	2120	200002	200402	210002	210402	2602	2702
Materials	Zinc-Nickel plated Steel	•	•	•	•	•	•	•	•	•	•
	Electropolished 316 Stainless Steel	•	•	•	•	•	•	•	•	•	•
	360 Brass										
Connections	1/8" NPT									•	•
	1/4" NPT	•	•							•	•
	3/8" NPT										
	7/16"-20 UNF 2B										
	1/2" NPT	•	•	•	•	•	•	•	•		
	1/2" NPT male - 1/4" NPT female										
	9/16"-18 UNF 2B										
	3/4" NPT										
	3/4" NPT male - 1/2" NPT female										
	1" NPT										
	1-1/4" NPT										
	1-1/2" NPT										
Valve Type	Male-Male										
	Male-Female										
	Female-Female	•	•							•	•
	Female-Male										
	Male-Male Angle										
	Male-Female Angle										
	Female-Female Angle										
	Male										
	Male-Female Extended										
	Female-Male Extended										
	Female-Female Extended										
	Flange-Female	•	•	•	•	•	•	•	•		
	Flange-Flange	•	•	•	•	•	•	•	•		
Pressure Ratings	3,000 psi										
	6,000 psi		•		•			•	•		•
	10,000 psi	•		•		•	•			•	
Orifice Size	0.141"									•	•
	0.156"										
	0.172"										
	0.187"	•	•	•	•	•	•	•	•		
	0.375"										
	0.438"										
Flow Coefficient (Cv)	0.38									•	•
	0.42										
	0.44	•		•		•	•				
	0.64										
	0.76		•		•			•	•		
	2.70										
	3.00										
	4.00										
Stem Seal	FKM	•	•	•	•	•	•	•	•	•	•
	PTFE	•	•	•	•	•	•	•	•	•	•
	EPDM	•	•	•	•	•	•	•	•	•	•
	FFKM	•	•	•	•	•	•	•	•	•	•
	NBR	•	•	•	•	•	•	•	•	•	•
Packings	PTFE	•	•	•	•	•	•	•	•	•	•
	Graphite	•		•		•	•			•	
Soft Seats	Acetal		•		•			•	•		
	PEEK		•		•			•	•		
	PCTFE		•		•			•	•		
Stem Tips	Rotating (316 Stainless)	•	•	•	•	•	•	•	•	•	
	Acetal										•
	Non-rotating (316 Stainless)		•	•	•	•	•	•	•	•	•
	Ball (440C Stainless)	•		•		•	•			•	
	Ball (carbide)	•		•		•	•			•	
	Ball (ceramic)	•		•		•	•			•	
	Ball (Monel)	•		•		•	•			•	
	Regulating hard	•		•		•	•			•	
	PCTFE										•
	PEEK										•
	Regulating Acetal										•
	Regulating PCTFE										•
	Regulating PEEK										•
Handles	1-13/16" Mini "T" - HL1	•	•	•	•	•	•	•	•		
	2-1/2" "T" - HL2	•	•	•	•	•	•	•	•		
	1" Round Knurled - HL3	•	•	•	•	•	•	•	•	•	•
	1-3/8" Phenolic - HL4	•	•	•	•	•	•	•	•		
	1-3/4" Phenolic - HL5	•	•	•	•	•	•	•	•		
	1-3/8" Mini "T" - HL7									•	•
	2-3/8" Phenolic - HL9										

NOSHOK Manifold Valves Reference Chart

		Static Pressure Block & Bleed				Meter Manifold	Differential Pressure					Natural Gas		
		Hard Seat		Soft Tip		Soft Seat	Hard Seat		Soft Seat		Soft Tip	Hard Seat	Soft Seat/Tip	
	SERIES	2603	2604	2703	2704	2180	3010	3610	3110	3510	3710	5030	5130	5530
Materials	Zinc-Nickel plated Steel	•	•	•	•	•	•	•	•	•	•	•	•	•
	Electropolished 316 Stainless Steel	•	•	•	•	•	•	•	•	•	•	•	•	•
	360 Brass													
Connections	1/8" NPT													
	1/4" NPT					•		•			•			
	3/8" NPT	•		•										
	7/16"-20 UNF 2B													
	1/2" NPT		•		•		•		•	•		•	•	•
	1/2" NPT male - 1/4" NPT female													
	9/16"-18 UNF 2B													
	3/4" NPT													
	3/4" NPT male - 1/2" NPT female													
	1" NPT													
	1-1/4" NPT													
	1-1/2" NPT													
Valve Type	Male-Male													
	Male-Female													
	Female-Female	•	•	•	•	•	•	•	•	•	•	•	•	•
	Female-Male													
	Male-Male Angle													
	Male-Female Angle													
	Female-Female Angle													
	Male													
	Male-Female Extended													
	Female-Male Extended													
	Female-Female Extended													
	Flange-Female						•		•	•		•	•	•
	Flange-Flange						•		•	•		•	•	•
Pressure Ratings	3,000 psi													
	6,000 psi			•	•	•			•	•	•		•	•
	10,000 psi	•	•				•	•				•		
Orifice Size	0.141"							•			•			
	0.156"	•	•	•	•									
	0.172"													
	0.187"					•	•		•			•	•	
	0.375"									•				•
	0.438"													
Flow Coefficient (Cv)	0.38													
	0.42													
	0.44	•	•	•	•		•	•			•	•		
	0.64													
	0.76					•			•				•	
	2.70													
	3.00									•				•
	4.00													
Stem Seal	FKM	•	•	•	•	•	•	•	•	•	•	•	•	•
	PTFE	•	•	•	•	•	•	•	•	•	•	•	•	•
	EPDM	•	•	•	•	•	•	•	•	•	•	•	•	•
	FFKM	•	•	•	•	•	•	•	•	•	•	•	•	•
	NBR	•	•	•	•	•	•	•	•	•	•	•	•	•
Packings	PTFE	•	•	•	•	•	•	•	•		•	•	•	
	Graphite	•	•				•	•				•		
Soft Seats	Acetal					•			•	•			•	•
	PEEK					•			•	•			•	•
	PCTFE					•			•	•			•	•
Stem Tips	Rotating (316 Stainless)	•	•			•	•	•	•	•		•	•	•
	Acetal			•	•	•					•		•	•
	Non-rotating (316 Stainless)	•	•			•	•		•			•	•	
	Ball (440C Stainless)	•	•				•	•				•		
	Ball (carbide)	•	•				•	•				•		
	Ball (ceramic)	•	•				•	•				•		
	Ball (Monel)	•	•				•	•				•		
	Regulating hard	•	•				•	•				•		
	PCTFE			•	•						•		•	
	PEEK			•	•						•		•	
	Regulating Acetal			•	•						•		•	
	Regulating PCTFE			•	•						•		•	
	Regulating PEEK			•	•						•		•	
Handles	1-13/16" Mini "T" - HL1	•	•	•	•		•	•	•		•	•	•	
	2-1/2" "T" - HL2	•	•	•	•	•	•	•	•	•	•	•	•	
	1" Round Knurled - HL3	•	•	•	•	•	•	•	•	•	•	•	•	•
	1-3/8" Phenolic - HL4	•	•	•	•	•	•	•	•	•	•	•	•	•
	1-3/4" Phenolic - HL5	•	•	•	•	•	•	•	•	•	•	•	•	
	1-3/8" Mini "T" - HL7											•	•	•
	2-3/8" Phenolic - HL9													

Tips for Selecting the Best NOSHOK Valve for Your Application

NOSHOK's wide range of needle and manifold valves cover a vast majority of industrial applications, but knowing which needle or manifold valve to select may be a daunting task. As all NOSHOK valves are not created equal, the following are general tips one should consider when deciding which NOSHOK valve is best suited for their application.

1. System Parameters
Knowing the system parameters for which you want to install a NOSHOK valve is critical. What media, gas or liquid, will flow through the system? Is the media corrosive? What is the viscosity? At what temperatures and pressures will the NOSHOK valves be exposed? What is the flow rate at peak efficiency?

2. Function
Does the valve need to meter in-line flow and/or direct media throughout multiple outlets? Will the system need to be bled without disrupting permanent piping installations? Will any other instrumentation be installed to measure system pressure or temperature? Is physical space a concern?

3. Media Compatibility
For those corrosive medias, knowing how they affect certain materials will begin narrowing down the valve options. NOSHOK valve bodies come standard in 360 Brass, Zinc-Nickel plated Steel, and electropolished 316 Stainless Steel. Standard stem o-rings are FKM and PTFE. Acetal soft tips and seats are also standard on certain models. Other body and sealing materials are available to accommodate any media.

4. Flow
Every NOSHOK valve is rated with a flow coefficient, C_V, which identifies the relationship between rate of flow and the pressure drop across the valve's orifice. Understanding the flow coefficient of your system will aid in deciding the proper size NOSHOK valve required.

5. Installation Configuration
NOSHOK valves come in a variety of shapes and sizes that are guaranteed to fit in almost every system application. Whether a male-male, male-female, female-female, in-line or angled configuration is needed, there is a NOSHOK valve suited for the application.

Answering the aforementioned questions will help you select which NOSHOK needle or manifold valve is best for your application. NOSHOK's Customer Support Team is also available at 440.243.0888 should you need further assistance.

Needle Valves Pressure vs. Temperature: FKM O-Ring with Compatible Fluid

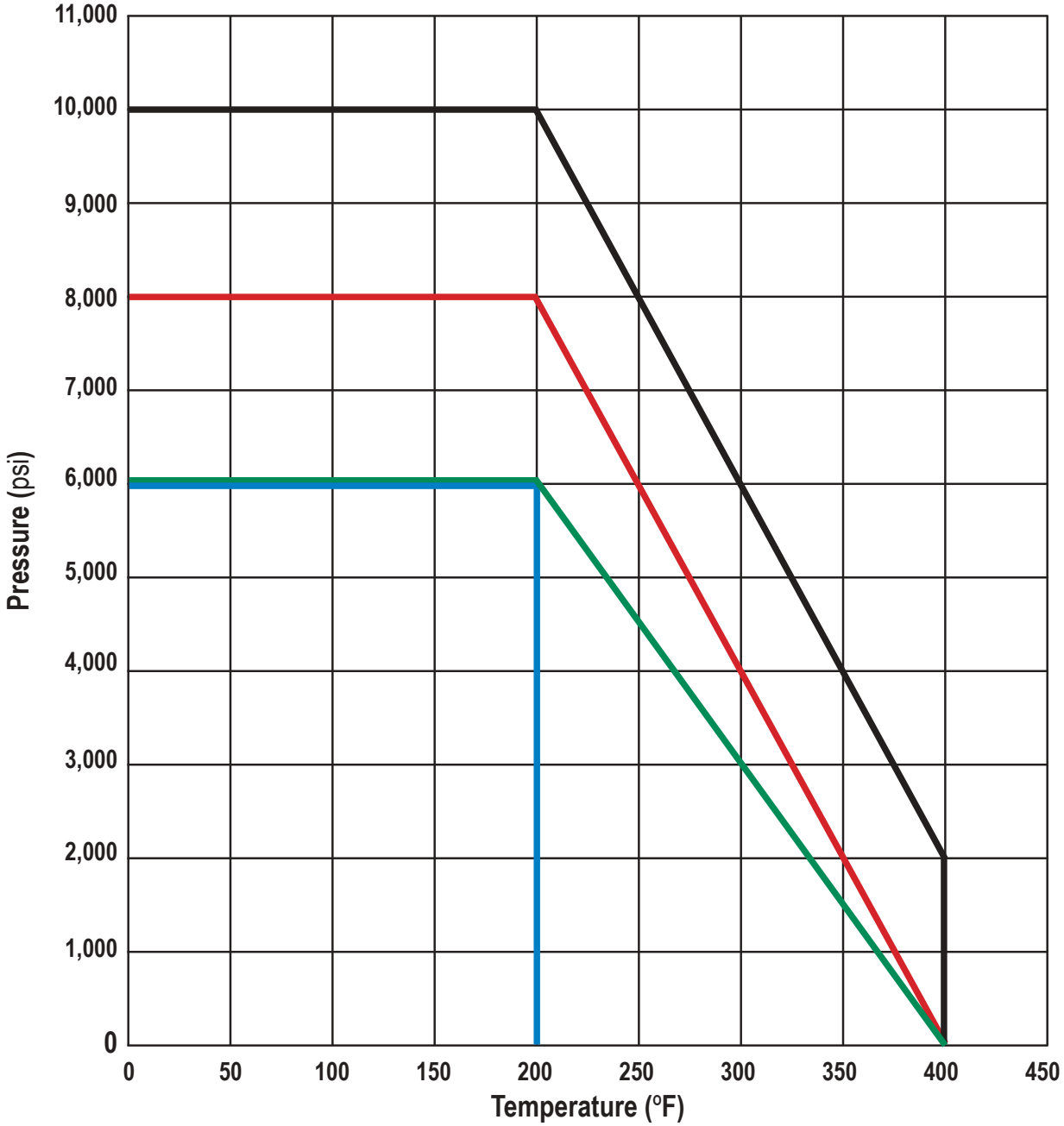

100, 200, 402-404 600, 800, 2070, 3070 Series, hard seat, Steel and Stainless Steel

150, 300, 500, 700, 850, 2170 Series, soft seat or tip, Steel, Stainless Steel and Brass

406-412 Series, hard seat, Steel and Stainless Steel

100 Series, hard seat, Brass

Needle Valves Pressure vs. Temperature: Packing Style with Compatible Fluid

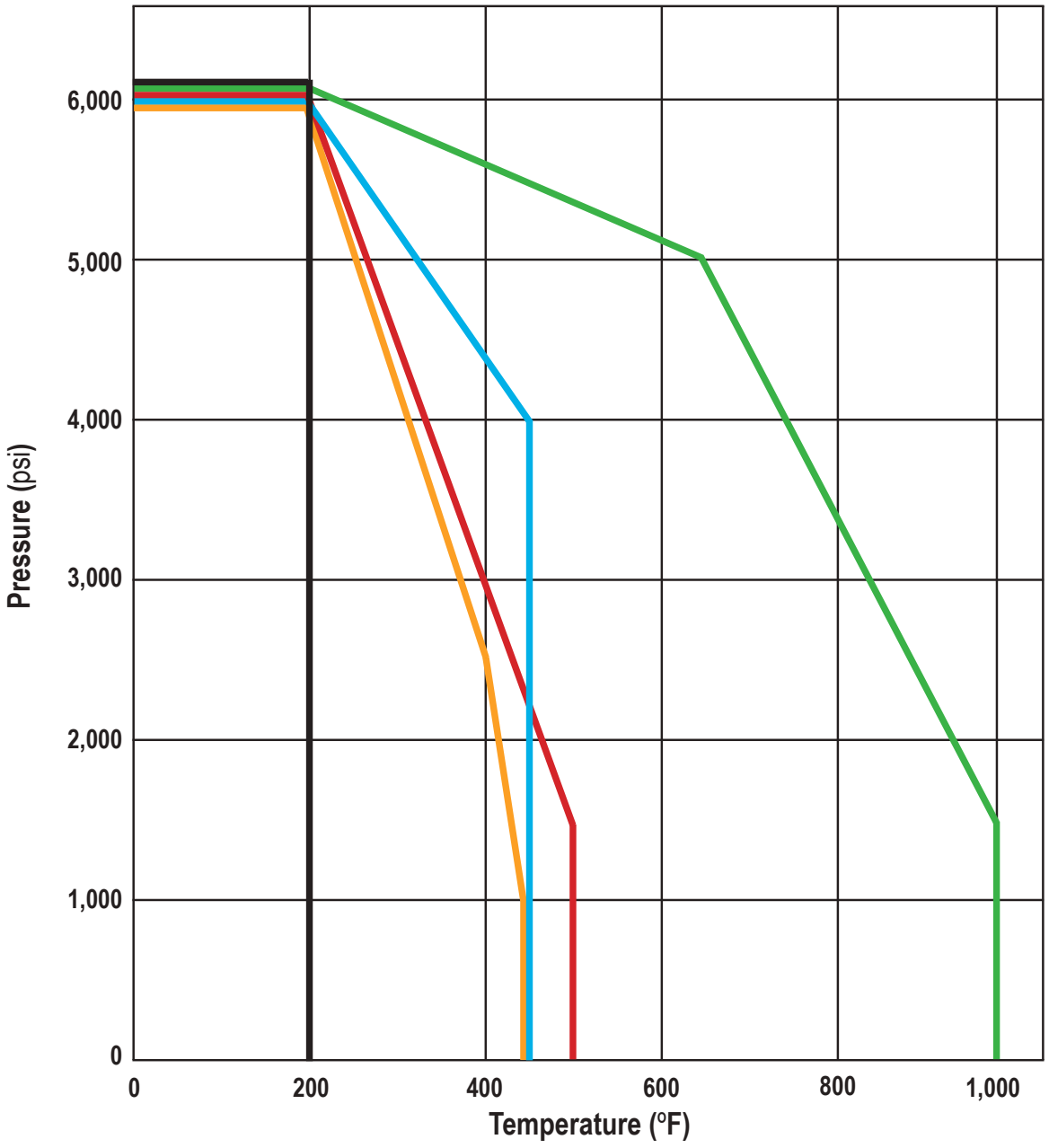

- Steel needle valve with Graphite (P2) packing
- Steel or Stainless Steel needle valve with PTFE (P1) packing
- Stainless Steel needle valve with Graphite (P2) packing
- Brass needle valve with PTFE (P1) or Graphite (P2) packing
- Steel or Stainless Steel needle valve, with packing and Acetal soft seat or Acetal soft tip

Canadian Registration Numbers

CRN documents are available on on our website at www.noshok.com.

Category:	C. Valves
Type of Fitting:	All line valves

Alberta	0C15217.52
British Columbia	Exempt
Manitoba	0C15217.54
New Brunswick	0C15217.57
Newfoundland & Labrador	0C15217.50
Northwest Territories	0C15217.5T
Nova Scotia	0C15217.58
Nunavut	0C15217.5N
Ontario	0C15217.5
Prince Edward Island	0C15217.59
Quebec	CSA-0C15217.56
Saskatchewan	CSA-0C15217.56
Yukon Territory	0C15217.5Y

NOTES

NOTES

NOTES

NOTES

QUALITY POLICY

NOSHOK is committed to providing a high degree of value and continually improving processes to enhance customer satisfaction by focusing on requirements for pressure, temperature, and level measurement instrumentation and related products.

TO DOWNLOAD OR ORDER CATALOGS,
VISIT WWW.NOSHOK.COM

All from world class technology.

Combined with real-world stamina.

The highest value with the industry's best warranty.

And all from a company with a 50+ year record of customer satisfaction.

All from your Single Source Instrumentation Company.

NOSHOK

Adaptive Industrial Solutions
sales@adaptiveind.com
(877) 818-5009

Web: www.noshok.com

ISO 9001:2015
REGISTERED

Catalog NK12VPS-5