SUBMERSIBLE LEVEL TRANSMITTER



Model BR313L
Submersible Level Transmitter

MODEL BR313L

PRODUCT OVERVIEW:

The Model BR313L from Blue Ribbon Corporation is a line of highly accurate and reliable submersible level transmitters. The corrosion-resistant 316L stainless steel construction, and an integrated hydrophobic breather vent help provide years of maintenance-free service.

FEATURES:

- Available ranges of 0-20" WC thru 300 PSI (50 MBAR to 21 BAR)
- Case rated to 900 FTWC (275 meters WC)
- Up to ±0.10% FSO accuracy
- 316L stainless steel housing with optional titanium
- Hytrel jacketed cable with optional Tefzel®
- Lightning suppression as standard

APPLICATIONS:

- Wet wells, ponds, rivers and tank level measurements
- Water treatment
- Ground water monitoring
- Dredging levels
- Shipboard level control

FIELD OPTIONS:

- Slim 0.622" (15.88 cm) diameter (Model BR313SL)
- Titanium construction (Model BR313L-NI)
- Additional Hytrel cable and Tefzel® jacketed cable lengths
- Tapered inlet with stand-off plate for wastewater
- Remote zero and span adjustments

© 2015 Blue Ribbon Corp. **Adaptive Industrial Solutions**
sales@adaptiveind.com | (877) 818-5009

SUBMERSIBLE LEVEL TRANSMITTER

DIMENSIONAL DRAWING

All dimensions are in inches (mm)

STANDARD WIRING

WIRE	MODEL 313L
RED	+EXC/SIG
BLK	-EXC/SIG
GRN	N/C
WHT	N/C
SHIELD	OPEN

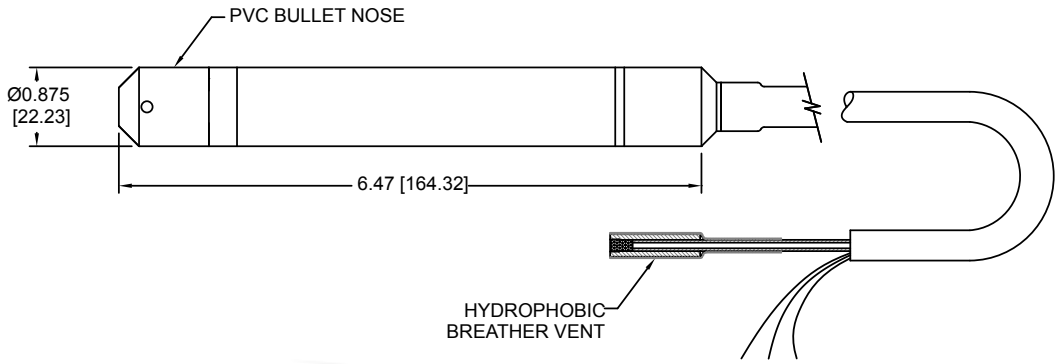

REFERENCE SPECIFICATIONS

ELECTRICAL

- **Excitation Voltage:** 9 to 36 Vdc
- **Output Signal:** 4-20 mA
- **Circuit Protection:** Short circuit or reversed wired – Indefinite
- **Load Resistance:** 1400 Ω max. at 40 Vdc excitation
- **Response Time:** ≤5 ms to 90%
- **Connection:** Hytrel jacketed, 4-conductor, 18 AWG with vent tube and hydrophobic filter, 8′ long, other lengths available.

MATERIALS OF CONSTRUCTION

- **Wetted Parts:** 316L, PVC, Neoprene, and Hytrel jacketed cable
- **Housing:** 316L stainless steel, optional titanium
- **Cable Jacket Material:** Hytrel (Tefzel optional)
- **Cable Seal:** Viton (Optional materials available)
- **Nose Cap:** PVC
- **Internal Fill:** Fomblin oil fill (May contain Silicone oil fill)

STATIC ACCURACY (BFSL): Non-Linearity @ +70 °F

Standard: ±0.5% FSO

Improved: ±0.2% FSO, and ±0.1% FSO

Zero & Span Balance: ±1.0% FSO @ +70 °F

MECHANICAL

- **Process Connection:** PVC bullet nose
- **External Pressure:** Rated to 900 FTWC (274 meters) max.
- **Proof Pressure:** 2X FSO
- **Burst Pressure:** 4X FSO
- **Approximate Weight:** 10 oz (0.3 kg) nominal (options may increase weight)
- **Diameter:** 0.875″ (2.22 cm)

PRESSURE RANGES

- 0-20″ WC thru 0 to 300 PSI (0-50 MBAR thru 0-21 BAR)

THERMAL SPECIFICATIONS

- **Compensated Range:** 0 °F to +140 °F (-17.7 °C to +60 °C)
- **Operating Range:** -40 °F to +185 °F (-40 °C to +85 °C)
- **Storage Ambient:** -40 °F to +195 °F (-40 °C to +90.6 °C)
- **Effect on Zero/Span:** <±2.0% FSO/100 °F

All specifications are for reference purposes only. In the interests of continuous product improvement, all specifications are subject to change without notice. Please contact Blue Ribbon Corporation for assistance with your application.

© 2015 Blue Ribbon Corp.
Adaptive Industrial Solutions
sales@adaptiveind.com | (877) 818-5009