Pressure & Level Measurement Solutions

NOSHOK



Pressure Gauges
- Dial Indicating
- Differential
- Sanitary
- Digital

Pressure & Level Transducers & Transmitters
- Industrial
- OEM
- Hazardous Location
- Sanitary

Pressure Switches

Options & Accessories

At NOSHOK, we pride ourselves on being innovators in the industry by continually offering the latest technology and measurement solutions, and providing the best customer support in the marketplace.

Established in 1967, NOSHOK was one of the first companies to offer liquid filled pressure gauges. We also took a bold step by backing our quality gauges with an extended 3-year warranty. That unwavering standard of quality has endured for over 50 years, and as we have expanded our product offering we continue to provide industry-leading warranties. NOSHOK also leads the industry as one of the first companies to offer corrosion-resistant zinc nickel plating standard on our carbon steel valves.

We have the capacity to put together special requirements which are so often hard to find. If you do not find what you need in this catalog, chances are we can still put a solution together.

NOSHOK is committed to providing excellence on every level. Thank you for choosing NOSHOK products.

Christian F. L. Cole
CEO/President

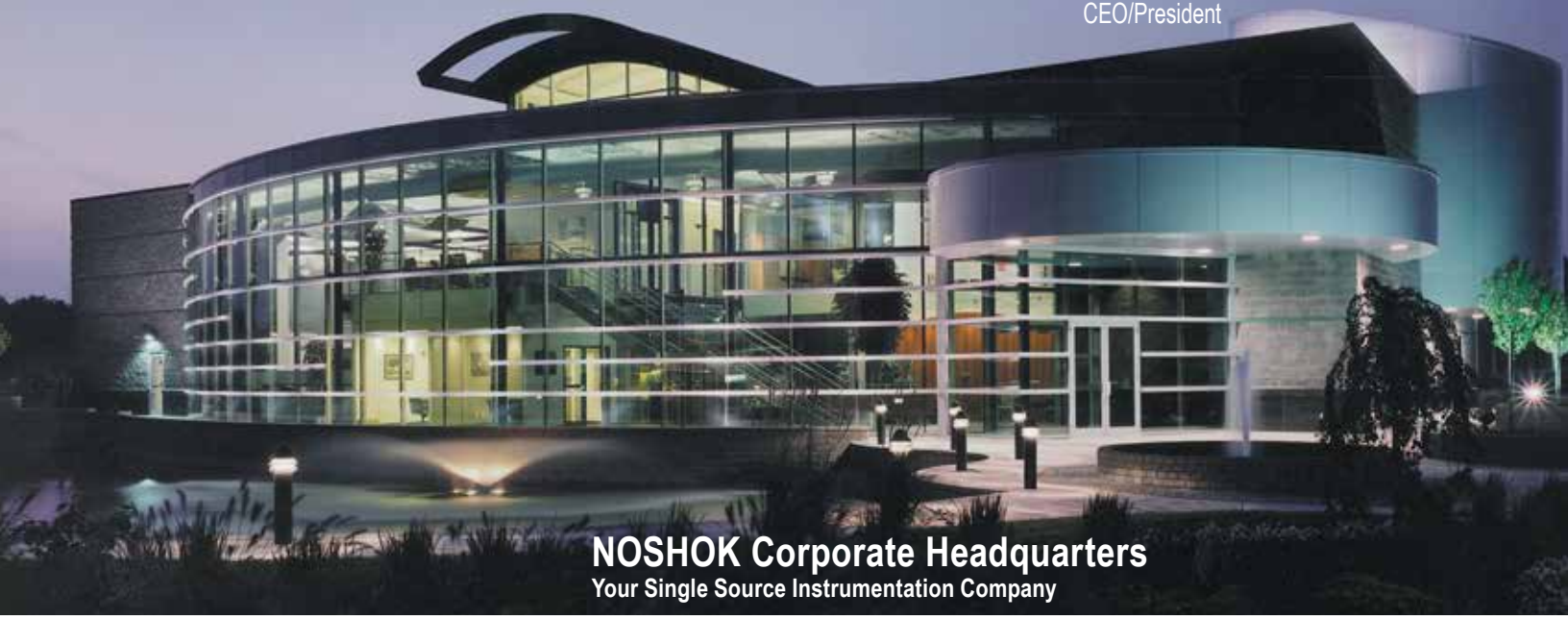

NOSHOK Corporate Headquarters
Your Single Source Instrumentation Company

NOSHOK is a member and actively supports:

ASME Setting the Standard
fisa Distributors Serving Sanitary Processing
FPDA motion control solutions network
Association for High Technology Distribution AHTD
American Water Works Association
National Fluid Power Association NFPA

NOSHOK is an ISO 9001:2015 registered company.

WARRANTY INFORMATION

NOSHOK's **Five Year Warranty** applies to our 1000 and 1100 Series differential gauges.

Our **Three Year Warranty** applies to our 300, 500, 502, 660, 760, and 900 Series liquid filled gauges; 10 Series liquid filled sanitary gauges; 1000 Series digital gauge; 100, 200, 300, PTI20, PTI30,PTI40, 611, 612, 613, 615/616, 621/622, 623/624, 625/626, 627, 640, 650, 660 and 800 Series transmitters & transducers; 11, 20, 25 and 30 Series sanitary transmitters, and 500, 800 Series electronic switch products.

Our **One Year Warranty** applies to our 100, 200, 400, 402, 640, 740, and 800 Series dry gauges; 10 Series dry sanitary gauges; 100, 200, 300 and 400 Series mechanical switch products, and 628 Series intrinsically safe hammer union transmitter.

NOSHOK guarantees all products to be free from defects in material and workmanship, to remain within catalogued accuracy specifications, and to operate within the catalogued performance specifications. These products must be operated within the catalogued environmental and application parameters. Determination of failure will be made by NOSHOK, Inc.'s equipment and personnel or a certified test facility specializing in this type of evaluation. Instrument failures determined to be caused by over-range, incompatibility with environment or product media and abuse will not be considered under this warranty. NOSHOK, Inc. will, at its discretion, repair or replace the instrument without cost to the customer.

Limitations which apply are: Bourdon tube pressure gauges must be used within their calibrated maximum range to prevent damage. Pressure gauges must be operated within the following working pressure limits: Dynamic pressure application, 60% of the dial range; Static pressure applications, where no sharp fluctuations occur, 90% of the dial range. The gauges must be operated within specified ambient temperature ranges.

CAUTION:

Operating conditions including, but not limited to, system pressure, media compatibility and ambient conditions must be considered when selecting gauges and accessories, improper selections and use of gauges could possibly cause gauge failure and lead to possible property damage or personal injury. Refer to the American National Standard ASME B40.1 for the correct selection and use of dial indicating gauges.

T A B L E O F C O N T E N T S

NOSHOK

DIAL INDICATING PRESSURE GAUGES

ABS & Steel Case, Dry:
100 SERIES 6-9

Low Pressure Diaphragm:
200 SERIES 10-13

Brass Case, Liquid Filled:
300 SERIES 14-17

All Stainless Steel, Dry & Liquid Filled:
400/500 SERIES 18-21

All Stainless Steel, Dry & Liquid Filled, Extreme High Pressure:
402/502 SERIES 22-25

Process:
600/700 SERIES 26-27

Precision Test:
800 SERIES 28-29

ABS & Stainless Steel Case, Liquid Filled:
900 SERIES 30-38

Adaptive Industrial Solutions | sales@adaptiveind.com | (877) 818-5009

NOSHOK

TABLE OF CONTENTS

DIFFERENTIAL PRESSURE GAUGES

Piston Type:
1000 SERIES 39-42

Diaphragm Type:
1100 SERIES 43-46

SANITARY PRESSURE GAUGES

Fractional:
10 SERIES 47-48

Heavy-Duty:
10 SERIES 49-50

DIAL INDICATING PRESSURE GAUGE OPTIONS & ACCESSORIES

Panel Mounting Flanges, Cases & Cover Rings, Lenses, Maximum Indicating Pointer, Set Pointers, Rubber Case Protectors, Recalibrators & Adjustable Pointers, Overpressure Protection, Ammonia Refrigeration Gauges, Liquid Filling Options, Special Connections, Reid Vapor Test Gauges, Metric Dials & Customized Special Dials, Certified Calibration, Magnetic Spring Contact Switch 51-53

Dial Indicating Pressure Gauges Standard Connection Sizes 54

Options & Accessories by Gauge Series 55-58

Gauge Fill Options 58

Accuracy/Standard Dial Configurations 59-64

DIGITAL PRESSURE GAUGE

General Purpose Digital Gauge:
PGE20 SERIES 65-66

OEM PRESSURE TRANSMITTERS & TRANSDUCERS

Fixed Range:
PT10 SERIES 67-68

INDUSTRIAL PRESSURE & LEVEL TRANSMITTERS & TRANSDUCERS

General Purpose Fixed Range:
PT20 SERIES 69-72

High Performance Fixed Range:
PT30 SERIES 73-78

High Accuracy Fixed Range:
PT40 SERIES 79-83

High Pressure Fixed Range:
PT41 SERIES 84-87

Intelligent Pressure Transmitter - IO-Link:
PTI10 SERIES 88-90

Intelligent Indicating Transmitter/Switch:
PTI15 SERIES 91-92

Intelligent:
PTI20 SERIES 93-96

High Accuracy Intelligent:
PTI30 SERIES 97-100

Premier Accuracy Intelligent:
PTI40 SERIES 101-102

Radar Level Transmitter:
LTI20 SERIES 103-105

TABLE OF CONTENTS

NOSHOK

Small Diameter Submersible Level:
611 SERIES 106-107

Submersible Level:
612 SERIES 108-109

Cage-Protected Submersible Level:
613 SERIES 110-111

Precision:
640 SERIES 112-113

Micro-sized:
660 SERIES 114-115

HAZARDOUS LOCATION PRESSURE & LEVEL TRANSMITTERS

Explosion-Proof:
621/622 SERIES 116-117

Non-Incendive:
623/624 SERIES 118-119

Intrinsically Safe:
625/626 SERIES 120-121

Intrinsically Safe Submersible Level:
627 SERIES 122-123

Intrinsically Safe Hammer Union:
628 SERIES 124-125

SANITARY PRESSURE TRANSMITTERS

ASME-BPE Sanitary Clamp:
11 SERIES 126-127

Intelligent Silo and Tank Level Transmitter:
20 SERIES 128-131

Intelligent Pressure and Level Transmitter:
25 SERIES 132-133

"SNORKEL" Pressure and Level Transmitter:
30 SERIES 134-137

LEVEL SWITCHES

Vibrating Level Switch:
LSE20 SERIES 138-140

PRESSURE SWITCHES

Mechanical Compact SPDT:
200 SERIES 141-145

Mechanical Compact SPDT with Adjustable Hysteresis:
300 SERIES 146-149

Mechanical Heavy-Duty SPDT:
400 SERIES 150-153

PRESSURE MEASUREMENT INSTRUMENTATION OPTIONS & ACCESSORIES

Piston-Type Snubbers, Sintered Snubbers, Pigtail Steam Syphons, Swivel Adaptors 154-159

Reference Information 160-169

Frequently Asked Questions 170-172

Canadian Registration Numbers 173

ABS & Steel Case, Dry



100 SERIES

- General purpose non-fillable dry gauge
- Vacuum and compound ranges through 0 psi to 15,000 psi
- 1", 1-1/2", 2", 2-1/2" and 4" gauge sizes
- Standard impact-resistant ABS & Steel case
- Copper alloy and Brass wetted parts

OPERATING SPECIFICATIONS

1. Working Pressure Limitations

a. Dynamic Pressure
The working pressure should be limited to 60% of the dial range.

b. Static Pressure
The working pressure, where no sharp fluctuations occur, should be limited to 90% of the dial range

APPLICATIONS

- Hydraulics & pneumatics
- Medical
- Pumps & compressors
- Refrigeration controls
- Utilities
- Water management

	SERIES	SPECIFICATIONS
Pressure ranges	100 Series (all)	Vacuum and compound ranges through 0 psi to 15,000 psi
Accuracy	10-110	±4% full scale
	15-100, 15-110, 15-120, 20-100, 20-110, 20-120, 20-148, 25-100, 25-110, 25-120	±2.5% full scale
	40-100	±1.6% full scale
Temperature ranges*	10-110	Media 0 °F to 140 °F (-17 °C to 60 °C) Ambient 32 °F to 140 °F (0 °C to 60 °C)
	15-100, 15-110, 15-120, 20-100, 20-110, 20-120, 20-148, 25-100, 25-110, 25-120	Media -4 °F to 140 °F (-20 °C to 60 °C) Ambient -40 °F to 140 °F (-40 °C to 60 °C)
Measuring element	100 Series (all)	Copper alloy Bourdon tube
Connection	10-110	1/8" NPT, ABS
	15-100, 15-110, 15-120, 20-100, 20-110	1/8" NPT, Brass
	20-148	1/8" NPT/10-32 Female, Brass
	20-100, 20-110, 20-120, 25-100, 25-110, 25-120, 40-100	1/4" NPT Brass SAE J1926-3:7/16-20
Case	10-110, 15-100, 15-110, 20-100, 20-110, 20-148, 25-100, 40-100	ABS (Acryl Nitril Butadien Styrol)
	15-120, 20-120, 25-120	Black painted Steel with chrome triangular bezel and U-clamp
Bezel	15-110, 20-110, 25-110	Built-in bezel, molded as an integral part of the case for ease of panel mounting.
	15-120, 20-120, 25-120	Chrome-plated Steel triangular bezel
Lens	100 Series (all)	Acrylic
Pointer	100 Series (all)	Molded plastic
Dial	100 Series (all)	White background with black primary scale & red secondary scale. UV resistant.
Movement	100 Series (all)	Brass & nylon, or all-Brass with highly polished bearing surfaces

* For every 18 °F (10 °C) shift in temperature from which the gauge is calibrated, the user can experience up to ±0.4% additional error.

For details on accuracy/standard dial configuration and dial layouts, see pages 56-61.

⚠ **WARNING:** This product can expose you to chemicals including Lead and Nickel, which are known to the State of California to cause cancer and birth defects or other reproductive harm. For more information go to www.P65Warnings.ca.gov

ORDERING INFORMATION

GAUGE SIZES	**10**	1″	**20**	2″	**40**	4″		
	15	1-1/2″	**25**	2-1/2″				
CASE TYPES	**100**	ABS, bottom connection	**120**	Steel case panel mount				
	110	ABS, back connection	**148**	Square ABS, panel mount (2″ only)				
PRESSURE RANGES	**30vac**	-30 inHg vacuum to 0 psi	**30/300**	-30 inHg to 0 to 300 psi	**200**	0 psi to 200 psi	**2000**	0 psi to 2,000 psi
	30/15	-30 inHg to 0 to 15 psi	**15**	0 psi to 15 psi	**300**	0 psi to 300 psi	**3000**	0 psi to 3,000 psi
	30/30	-30 inHg to 0 to 30 psi	**30**	0 psi to 30 psi	**400**	0 psi to 400 psi	**5000**	0 psi to 5,000 psi
	30/60	-30 inHg to 0 to 60 psi	**60**	0 psi to 60 psi	**600**	0 psi to 600 psi	**6000**	0 psi to 6,000 psi
	30/100	-30 inHg to 0 to 100 psi	**100**	0 psi to 100 psi	**1000**	0 psi to 1,000 psi	**10000**	0 psi to 10,000 psi
	30/160	-30 inHg to 0 to 160 psi	**160**	0 psi to 160 psi	**1500**	0 psi to 1,500 psi	**15000**	0 psi to 15,000 psi
	30/200	-30 inHg to 0 to 200 psi						
				Other ranges available on request				
SCALE OPTIONS* **	**psi**	psi single scale	**psi/kPa**	psi/kPa dual scale	**psi/kg/cm²**	psi/kg/cm² dual scale	**psi/bar**	psi/bar dual scale
CONNECTION SIZES	**1/8**	1/8″ NPT	**SST**	SAE J1926-3:7/16-20 Adjustable	**1/4**	1/4″ NPT		
OPTIONS	**PMC**	Panel Mount Clamp	**SSC**	Stainless Steel Case	**LL**	Polycarbonate Lens	**ST**	Stainless Steel Tagging
	SSB	Polished Stainless Steel Bezel	**CRC**	Chrome Case	**GL**	Glass Lens*	**CPO**	Brass Sintered Orifice 20 Micron
	BLRF	Black Rear Flange	**FAC**	Flat Sided ABS Case	**SG**	Safety Glass Lens*	**BP1**	Brass Press Fit Orifice 0.1 mm
	BLFF	Black Front Flange – ABS Case	**BCR**	Black Cover Ring**	**HL**	Homalite Lens*	**BP3**	Brass Press Fit Orifice 0.3 mm
	CFF	Chrome Front Flange – ABS Case	**SSCR**	Stainless Steel Cover Ring**	**SP**	Red Set Pointer**	**BP8**	Brass Press Fit Orifice 0.8 mm
	SBFF	Black Front Flange – Steel Case	**CCR**	Chrome Cover Ring**	**MIP**	Maximum Indicating Pointer		
	SCFF	Chrome Front Flange – Steel Case	**PCCR**	Polished Chrome Cover Ring**	**SDM**	Silicone Dampened Movement		
	BSC	Black Steel Case	**CAR**	Chrome Adapter Ring*	**LM**	Laser Marking		

Please consult your local NOSHOK Distributor or NOSHOK, Inc. for availability and delivery information.

NOTES: Refer to 100 Series options & accessories chart on page 50 for availability by part number.
Cleaning for Oxygen Service (O2) is available only for dry or HL filled gauges

* A Steel, Stainless or chrome case & cover ring must be additionally ordered when lenses other than acrylic are utilized on all 100 Series.
** Only 110 Series require a Steel, Stainless or chrome case & cover ring to be additionally ordered when utilizing a set pointer or cover ring.
Please consult factory when a set pointer is to be utilized on a 120 Model.
*** Only available on 60 psi - 300 psi ranges

EXAMPLE

25 – 110 – 100 – psi – 1/8† – BSC

Gauge size ..... 2-1/2"
Case type .....ABS, back connection
Pressure range & scale option .....0 psi to 100 psi
Connection size† ..... 1/8" NPT
Option..... Black Steel Case

† Only include in part number if non-standard connection size is ordered.

NOTES: See standard connection sizes chart on page 54.
Shaded portions of this part number example are not required unless a non-standard connection size or an option is needed.

10-110

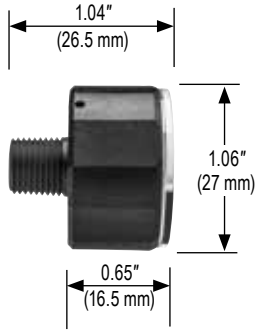

15-100

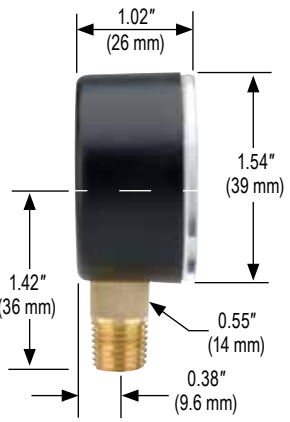

20-100

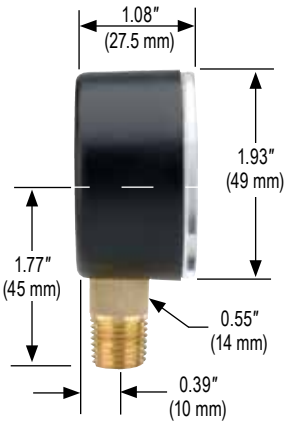

25-100

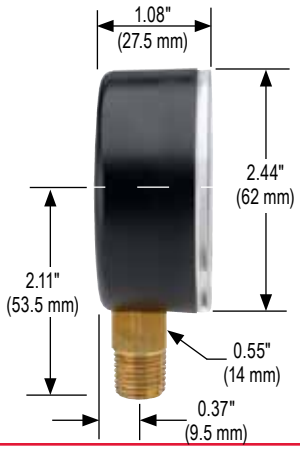

Dimensions

40-100

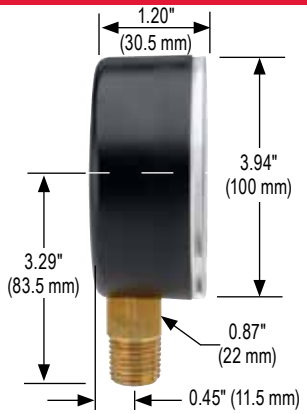

15-110

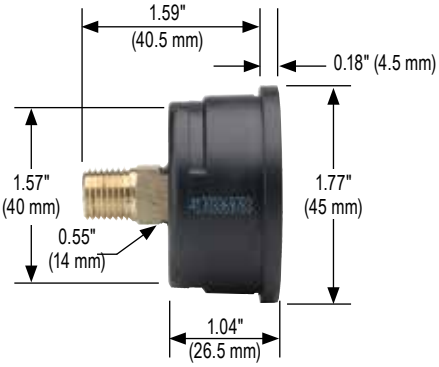

20-110

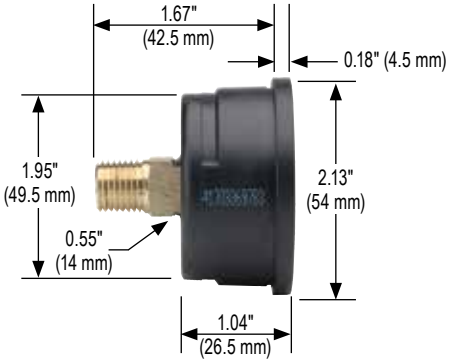

20-148

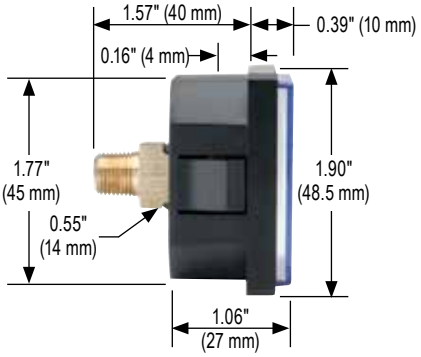

25-110

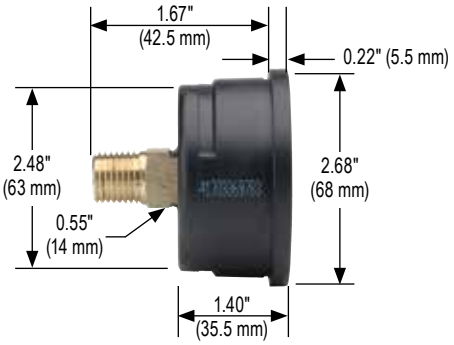

15-110 Front Flange

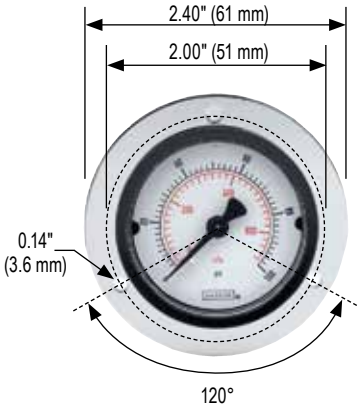

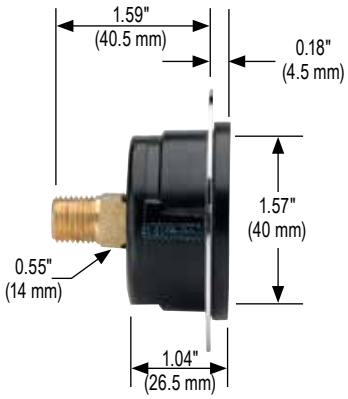

20-110 Front Flange

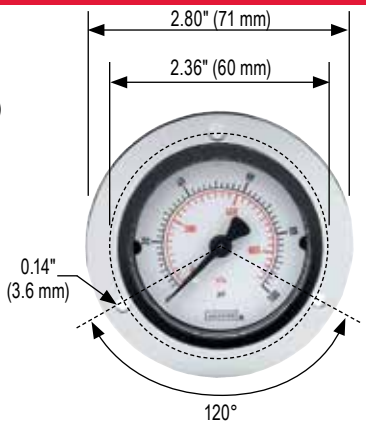

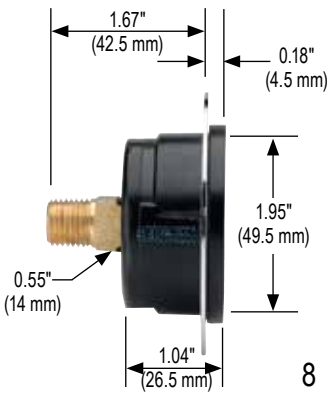

25-110 Front Flange

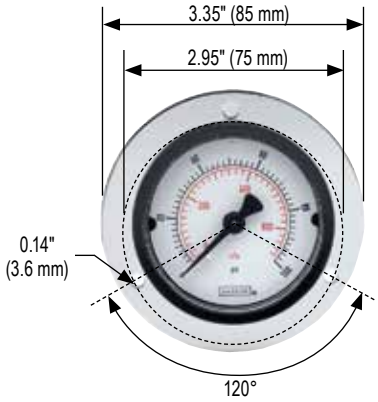

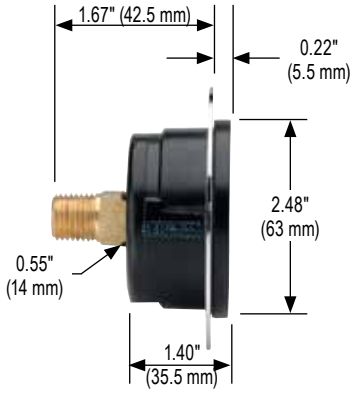

25-100 Rear Flange

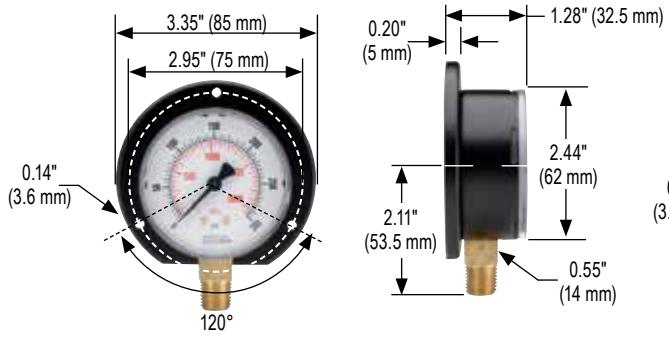

40-100 Rear Flange

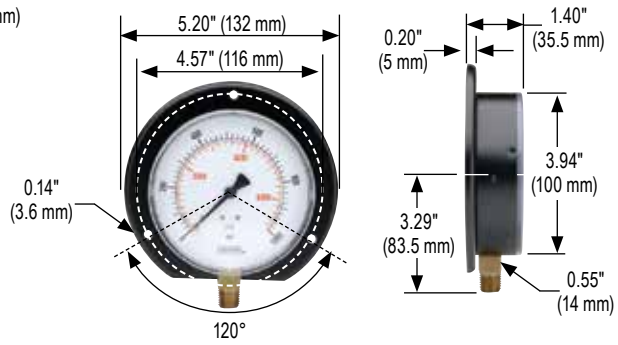

15-120 Chrome Bezel With U-Clamp

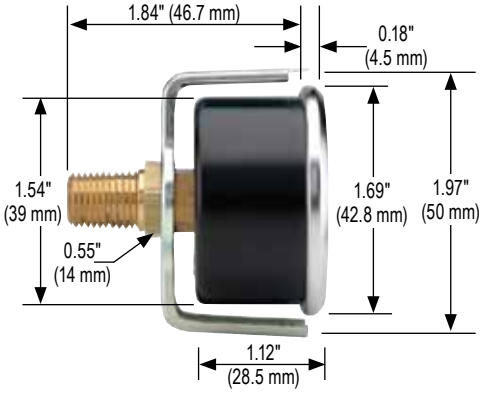

20-120 Chrome Bezel With U-Clamp

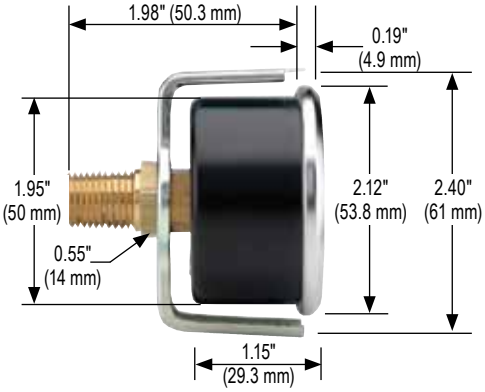

25-120 Chrome Bezel With U-Clamp

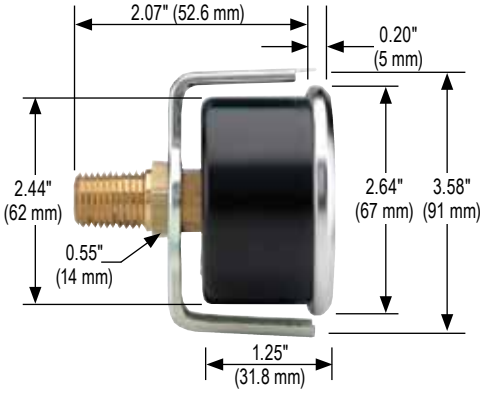

15-110 Panel Mount Clamp

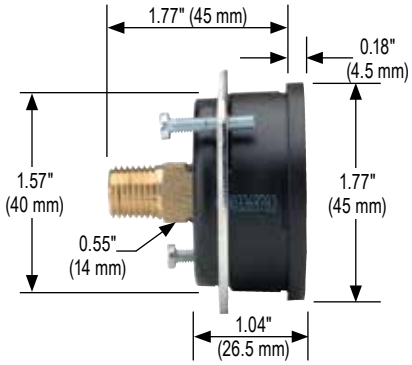

20-110 Panel Mount Clamp

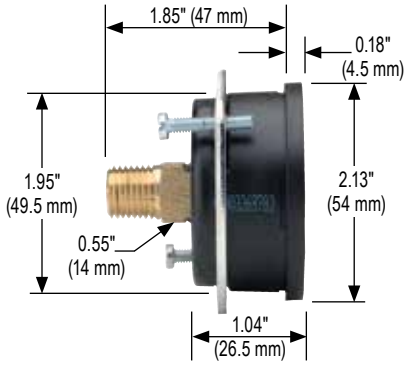

25-110 Panel Mount Clamp

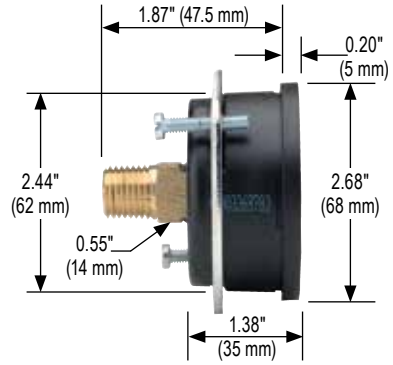

Low Pressure Diaphragm



200 SERIES

- Sensitive capsule-type, non-fillable dry gauge
- Vacuum ranges through 0 psi to 10 psi
- 2-1/2" and 4" gauge sizes
- Black painted Steel, Stainless Steel and impact-resistant ABS case
- Copper alloy and Brass wetted parts

OPERATING SPECIFICATIONS

1. Working Pressure Limitations

a. Dynamic Pressure
The working pressure should be limited to 60% of the dial range.

b. Static Pressure
The working pressure, where no sharp fluctuations occur, should be limited to 90% of the dial range

	SERIES	SPECIFICATIONS
Pressure ranges	200 Series (all)	Extreme low pressure vacuum ranges through 0 psi to 10 psi
Accuracy	25-200, 25-210, 25-224	±1.6% full scale
	40-200	±1.6% full scale
Temperature ranges*	200 Series (all)	Media -4 °F to 176 °F (-20 °C to 80 °C) Ambient -4 °F to 140 °F (-20 °C to 60 °C)
Measuring element	25-200, 25-210, 25-224, 40-200	Copper alloy diaphragm capsule
Connection	200 Series (all)	1/4″ NPT, Brass
Case	25-200, 25-210	Black painted Steel
	25-224	Black ABS (Acryl Nitril Butadien Styrol) with 25-224 includes zinc-plated Steel panel mount clamp
	40-200	304 Stainless Steel
Bezel	40-200	304 Stainless Steel
Lens	25-200, 25-210, 25-224	Acrylic
	40-200	Instrument glass
Pointer	200 Series (all)	Black finished Aluminum
Dial	200 Series (all)	Aluminum, white background with black scale. UV resistant.
Movement	25-200, 25-210, 25-224, 40-200	Brass and Nickel-silver with highly polished bearing surfaces

* For every 18 °F (10 °C) shift in temperature from which the gauge is calibrated, the user can experience up to ±0.4% additional error.

APPLICATIONS

- Filter monitoring
- Gas distribution
- HVAC
- Leak detection
- Level indication
- Medical

For details on accuracy/standard dial configuration and dial layouts, see pages 56-61.

⚠ **WARNING:** This product can expose you to chemicals including Lead and Nickel, which are known to the State of California to cause cancer and birth defects or other reproductive harm. For more information go to www.P65Warnings.ca.gov

Adaptive Industrial Solutions | sales@adaptiveind.com | (877) 818-5009

ORDERING INFORMATION

GAUGE SIZES	**25**	2-1/2″	**40**	4″					
CASE TYPES	**200**	Steel, bottom connection (304SS for 4″)			**224**	ABS, panel mount			
	210	Steel, back connection			**234**	Gas pressure test kit**			
PRESSURE RANGES	**15 inH$_2$O Vac**	-15 inH$_2$O to 0 inH$_2$O	**100 inH$_2$O**	0 inH$_2$O to 100 inH$_2$O	**100 oz/in^2**	0 oz/in^2 to 100 oz/in^2	**60 mbar**	0 mbar to 60 mbar	
	30 inH$_2$O Vac	-30 inH$_2$O to 0 inH$_2$O	**160 inH$_2$O**	0 inH$_2$O to 160 inH$_2$O	**160 oz/in^2**	0 oz/in^2 to 160 oz/in^2	**100 mbar**	0 mbar to 100 mbar	
	60 inH$_2$O Vac	-60 inH$_2$O to 0 inH$_2$O	**200 inH$_2$O**	0 inH$_2$O to 200 inH$_2$O	**20 oz/ in^2/inH$_2$O**	0 oz/in^2/inH$_2$O to 20 oz/in^2/inH$_2$O	**160 mbar**	0 mbar to 160 mbar	
	100 inH$_2$O Vac	-100 inH$_2$O to 0 inH$_2$O	**10 oz/in^2**	0 oz/in^2 to 10 oz/in^2	**32 oz/ in^2/inH$_2$O**	0 oz/in^2/inH$_2$O to 32 oz/in^2/inH$_2$O	**250 mbar**	0 mbar to 250 mbar	
	10 inH$_2$O	0 inH$_2$O to 10 inH$_2$O	**15 oz/in^2**	0 oz/in^2 to 15 oz/in^2	**3 psi**	0 psi to 3 psi	**400 mbar**	0 mbar to 400 mbar	
	15 inH$_2$O	0 inH$_2$O to 15 inH$_2$O	**30 oz/in^2**	0 oz/in^2 to 30 oz/in^2	**5 psi**	0 psi to 5 psi	**600 mbar**	0 mbar to 600 mbar	
	30 inH$_2$O	0 inH$_2$O to 30 inH$_2$O	**35 oz/in^2**	0 oz/in^2 to 35 oz/in^2	**10 psi**	0 psi to 10 psi			
	60 inH$_2$O	0 inH$_2$O to 60 inH$_2$O	**60 oz/in^2**	0 oz/in^2 to 60 oz/in^2	**40 mbar**	0 mbar to 40 mbar			
CONNECTION SIZE	**1/4**	1/4″ NPT							
OPTIONS	**BLRF**	Black Rear Flange	**GL**	Glass Lens*	**OP**	Over Pressure Protection	**LM**	Laser Marking	
	SSRF	304SS Rear Flange	**SG**	Safety Glass Lens*	**SSBU**	Stainless Steel Bezel & U-Clamp	**ST**	Stainless Steel Tagging	
	BLFF	Black Front Flange***	**PL**	Acrylic Lens	**BBU**	Black Bezel & U-Clamp	**BP3**	Brass Press Fit Orifice 0.3 mm	
	SSFF	304SS Front Flange	**RL**	Recalibrator Lens	**BCR**	Black Cover Ring	**BT3**	Brass Threaded Orifice 0.3 mm	
	CFF	Chrome Front Flange***	**SP**	Red Set Pointer	**SSCR**	Stainless Steel Cover Ring			
	SSC	Stainless Steel Case	**MIP**	Maximum Indicating Pointer					

Please consult your local NOSHOK Distributor or NOSHOK, Inc. for availability and delivery information.

NOTES: Refer to 200 Series Options & Accessories chart on page 51 for availability by part number.
O2 cleaning is not available for 200 Series gauges.
* A Steel, Stainless or chrome cover ring must be additionally ordered when lenses other than acrylic are utilized on all 200 Series
** Only available in 2-1/2″ size, 20 oz/35 inH$_2$O
*** Not available on 25-200 model

EXAMPLE

25 – 200 – 30 – inH$_2$0 – BP3

Gauge size ..... 2-1/2"
Case type ..... Steel, bottom connection
Pressure range & scale option ..... 0 inH$_2$0 to 30 inH$_2$0
Option ..... Brass Press Fit Orifice 0.3 mm

NOTES: See standard connection sizes chart on page 49.
Shaded portions of this part number example are not required unless a non-standard connection size or an option is needed.

25-200

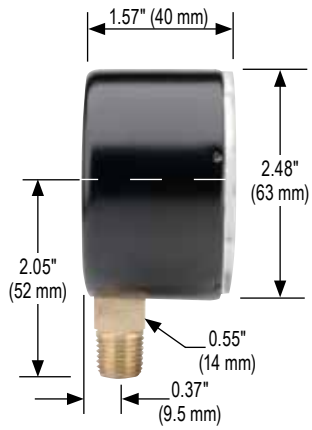

40-200

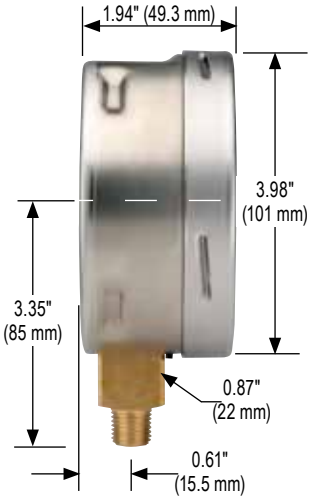

25-210

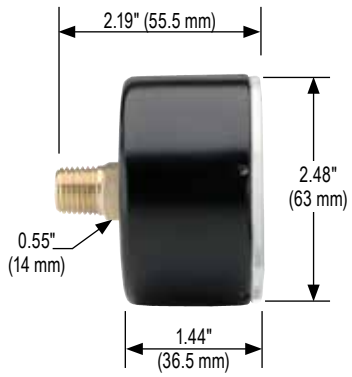

Dimensions

25-210 Front Flange

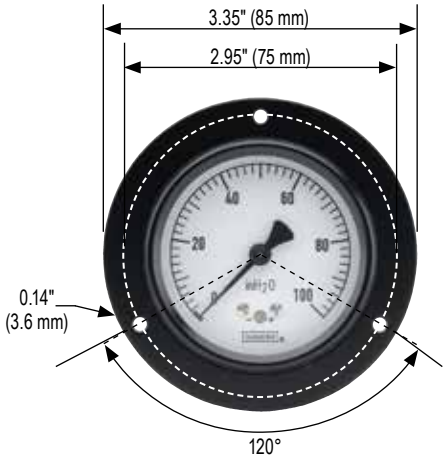

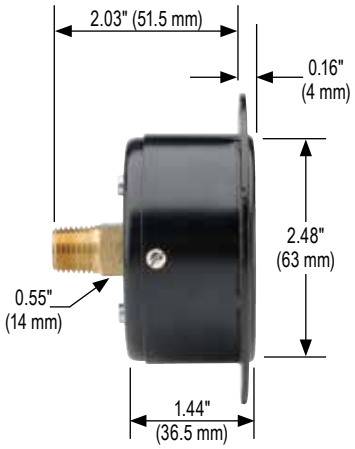

25-200 Rear Flange

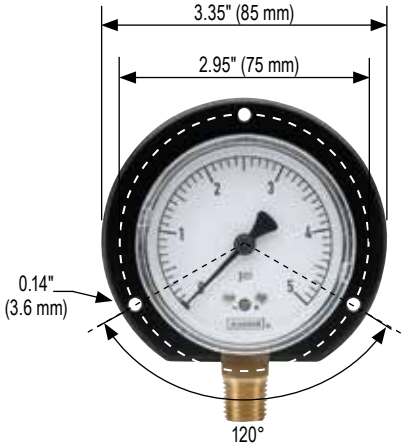

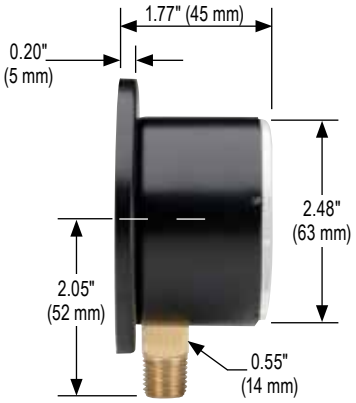

40-200 Rear Flange

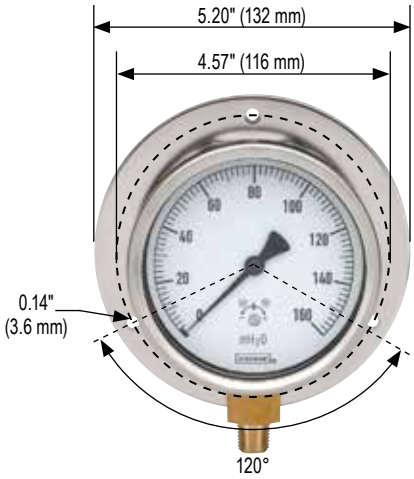

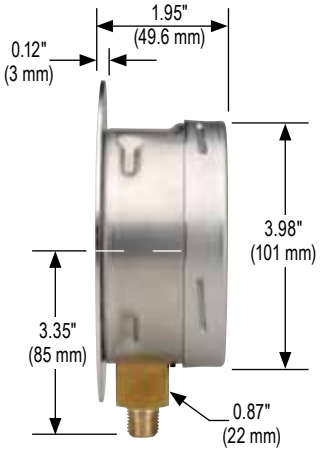

25-210 Triangular Bezel w/U-Clamp

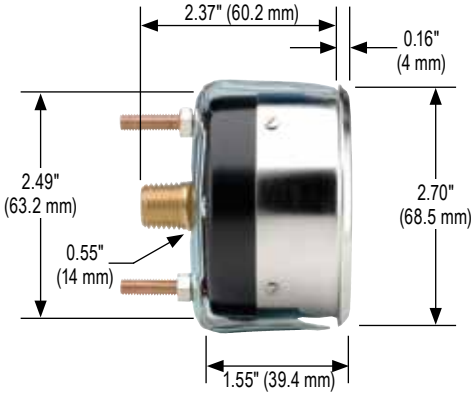

25-224 with Panel Mount Clamp

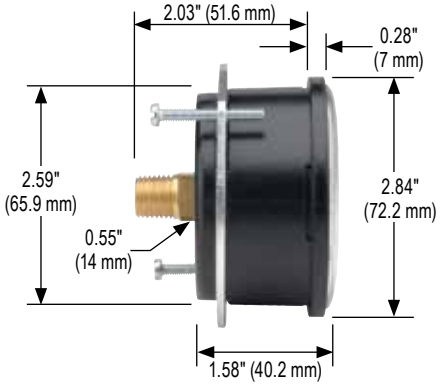

25-234



Brass Case, Liquid Filled



300 SERIES

- High quality, heavy-duty liquid filled gauge
- Vacuum and compound ranges through 0 psi to 15,000 psi
- 2-1/2" and 4" gauge sizes
- Die cast Brass case with natural Brass finish
- Copper alloy or 316 Stainless Steel and Brass wetted parts

OPERATING SPECIFICATIONS

1. Working Pressure Limitations

a. Dynamic Pressure
The working pressure should be limited to 60% of the dial range.

b. Static Pressure
The working pressure, where no sharp fluctuations occur, should be limited to 90% of the dial range.

APPLICATIONS

- Automotive
- Construction
- Hydraulics & pneumatics
- Mining
- Stamping & forming presses
- Transportation

	SERIES	SPECIFICATIONS
Pressure ranges	300 Series (all)	Vacuum and compound ranges through 0 psi to 15,000 psi
Accuracy	25-300, 25-310	±1.6% full scale
	40-300, 40-310	± 1% full scale
Temperature ranges*	300 Series (all)	Media -4 °F to 140 °F (-20 °C to 60 °C) Ambient 0 °F to 160 °F (-18 °C to 71 °C) Optional temperature ratings available from -40 °F to 212 °F (-40 °C to 100 °C)
Measuring element	25-300, 25-310 **(≤ 600 psi)**	Copper alloy "C" tube
	25-300, 25-310 **(800 psi to 6,000 psi)**	Copper alloy coiled safety tube
	25-300, 25-310 **(7,500 psi to 15,000 psi)**	316 Stainless Steel coiled safety tube
	40-300, 40-310 **(≤ 1,000 psi)**	Copper alloy "C" tube
	40-300, 40-310 **(15,000 psi)**	316 Stainless Steel coiled safety tube
Connection	25-300, 25-310	1/4" NPT die-cast Brass with the case. 7/16" – 20 SAE adjustable type straight thread with FKM O-ring is also available as a stock option on many ranges (-4 SAE).
	40-300, 40-310	1/4" NPT die-cast Brass with the case. 1/2" NPT is available on certain 40-300 ranges as a stock option, and on all other 40-300 and 40-310's as a non-stock option.
Case	300 Series (all)	Die cast Brass (natural Brass finish) with safety relief plug
Cover ring	300 Series (all)	Polished Brass
Lens	300 Series (all)	Acrylic with o-ring seal
Pointer	300 Series (all)	Balanced Aluminum, black finish
Dial	300 Series (all)	Aluminum, white background with black scale. UV resistant.
Movement	300 Series (all)	Brass and Nickel-silver with highly polished bearing surfaces
Fill liquid**	300 Series (all)	Glycerin

* For every 18 °F (10 °C) shift in temperature from which the gauge is calibrated, the user can experience up to ±0.4% additional error.

**See page 51 for gauge fill options.

For details on accuracy/standard dial configuration and dial layouts, see pages 56-61.

⚠ **WARNING:** This product can expose you to chemicals including Lead and Nickel, which are known to the State of California to cause cancer and birth defects or other reproductive harm. For more information go to www.P65Warnings.ca.gov

ORDERING INFORMATION

GAUGE SIZES	**25**	2-1/2″	**40**	4″			
CASE TYPES	**300**	Brass, bottom connection	**310**	Brass, back connection			
PRESSURE RANGES	**30vac**	-30 inHg to 0 psi	**30/300**	-30 inHg to 0 to 300 psi	**300**	0 psi to 300 psi	**3000**	0 psi to 3,000 psi
	30/15	-30 inHg to 0 to 15 psi	**15**	0 psi to 15 psi	**400**	0 psi to 400 psi	**5000**	0 psi to 5,000 psi
	30/30	-30 inHg to 0 to 30 psi	**30**	0 psi to 30 psi	**600**	0 psi to 600 psi	**6000**	0 psi to 6,000 psi
	30/60	-30 inHg to 0 to 60 psi	**60**	0 psi to 60 psi	**800**	0 psi to 800 psi	**7500**	0 psi to 7,500 psi
	30/100	-30 inHg to 0 to 100 psi	**100**	0 psi to 100 psi	**1000**	0 psi to 1,000 psi	**10000**	0 psi to 10,000 psi
	30/160	-30 inHg to 0 to 160 psi	**160**	0 psi to 160 psi	**1500**	0 psi to 1,500 psi	**15000**	0 psi to 15,000 psi
	30/200	-30 inHg to 0 to 200 psi	**200**	0 psi to 200 psi	**2000**	0 psi to 2,000 psi		
SCALE OPTIONS	**psi**	psi single scale	**psi/kPa**	psi/kPa dual scale	**psi/kg/cm²**	psi/kg/cm² dual scale	**psi/bar**	psi/bar dual scale
CONNECTION SIZES	**1/4**	1/4″ NPT	**1/2**	1/2″ NPT	**SST**	SAE J1926-3:7/16-20 Adjustable		
OPTIONS	**CFF**	Chrome Front Flange	**RF**	Rear Flange	**GLO**	Glass Lens Overlay	**BT3**	Brass Threaded Orifice 0.3 mm
	CFFN	Chrome Front Flange w/o holes	**CCR**	Chrome Cover Ring	**SGO**	Safety Glass Overlay	**BT4**	Brass Threaded Orifice 0.4 mm
	BFF	Brass Front Flange	**CBU**	Chrome Bezel & U-Clamp	**AR**	Adapter Ring	**BT8**	Brass Threaded Orifice 0.8 mm
	BLFF	Black Front Flange	**MIP**	Maximum Indicating Pointer*	**LM**	Laser Marking	**RCP**	Rubber Case Protector
	SSRF	304SS Rear Flange	**LL**	Polycarbonate Lens	**ST**	Stainless Steel Tagging		

Please consult your local NOSHOK Distributor or NOSHOK, Inc. for availability and delivery information.

NOTES: Refer to 300 Series Options & Accessories chart on page 51 for availability by part number.
Cleaning for Oxygen Service (O2) is available only for dry or HL filled gauges

* GY40 fill is standard for liquid filled gauges

EXAMPLE

40 – 300 – 3000 – psi – 1/2† – BT3

Gauge size .....4"
Case type ..... Brass, bottom connection
Pressure range & scale option .....0 psi to 3,000 psi
Connection size† ..... 1/2" NPT
Option.....Brass Threaded Orifice 0.3 mm

† Only include in part number if non-standard connection size is ordered.

NOTES: See standard connection sizes chart on page 49.
Shaded portions of this part number example are not required unless a non-standard connection size or an option is needed.

25-300 **40-300** **25-310**

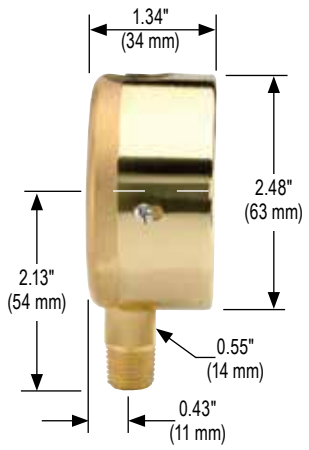

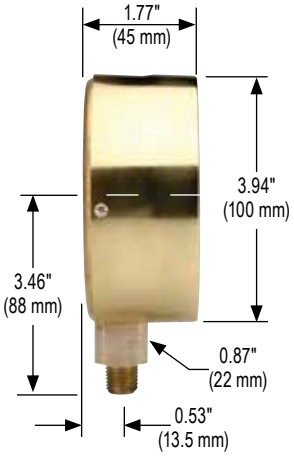

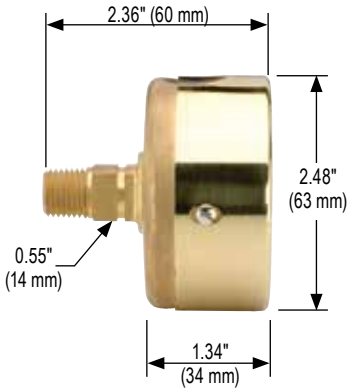

Dimensions

40-310

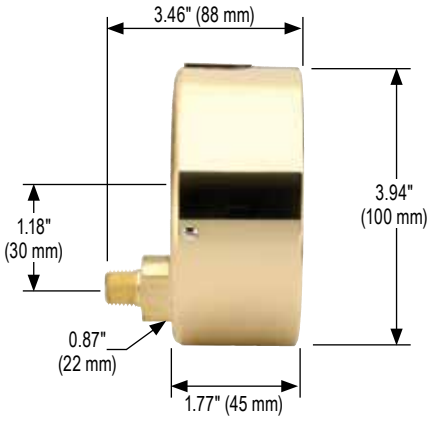

25-300 Front Flange

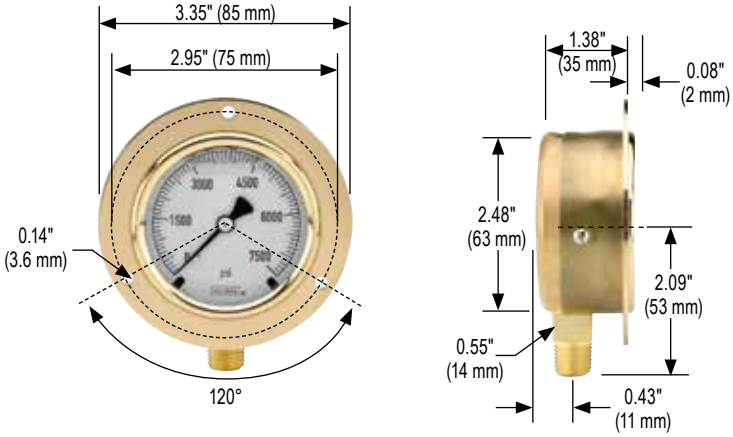

40-300 Front Flange

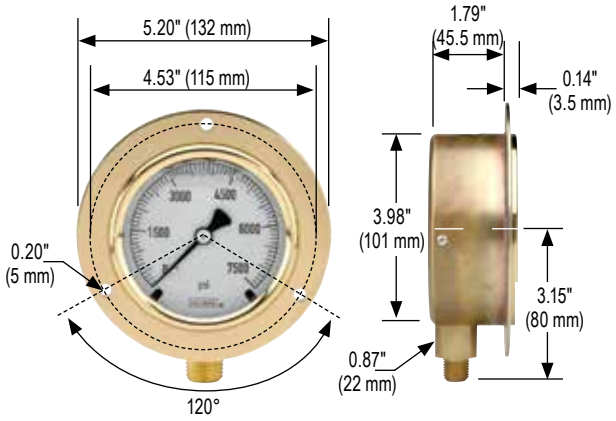

25-310 Front Flange

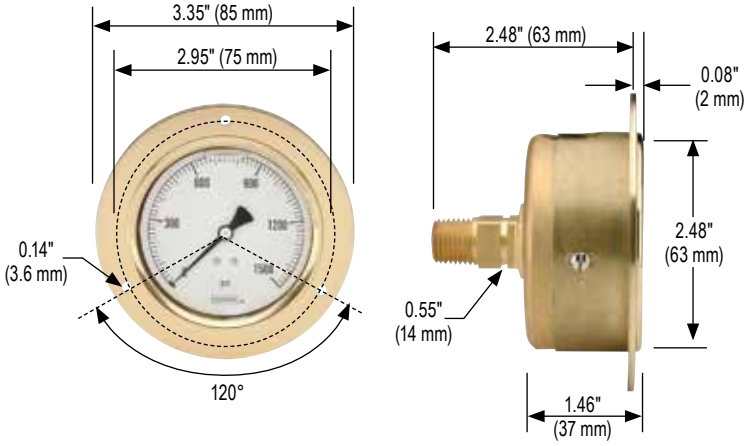

40-310 Front Flange

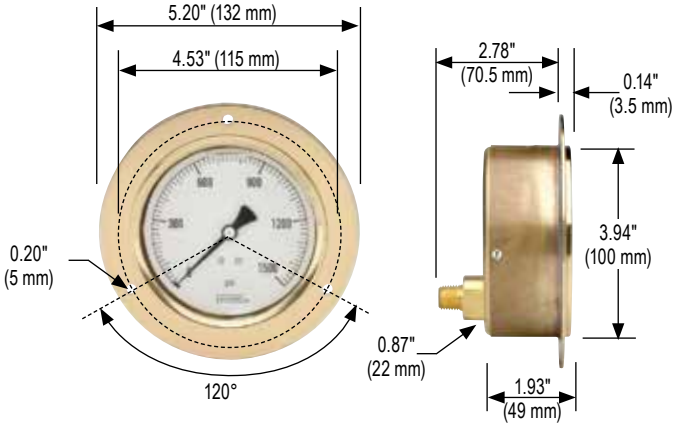

25-300 Rear Flange

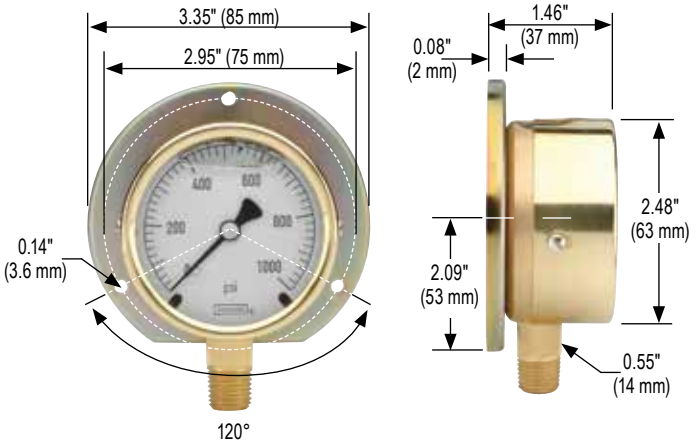

40-300 Rear Flange

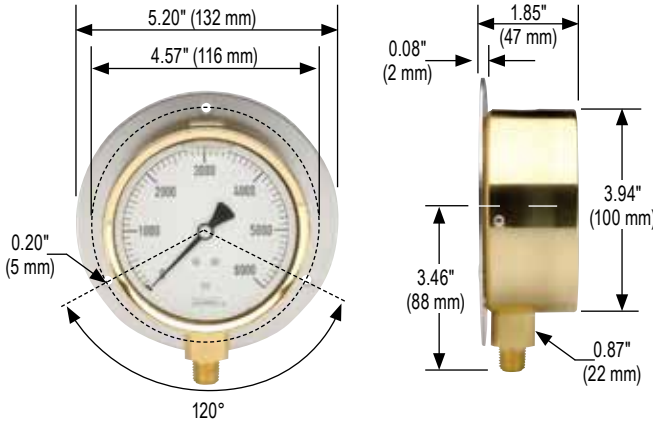

25-310 Rear Flange

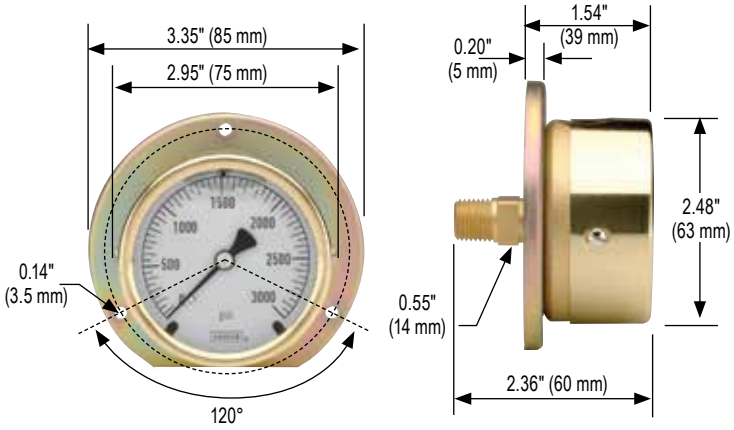

40-310 Rear Flange

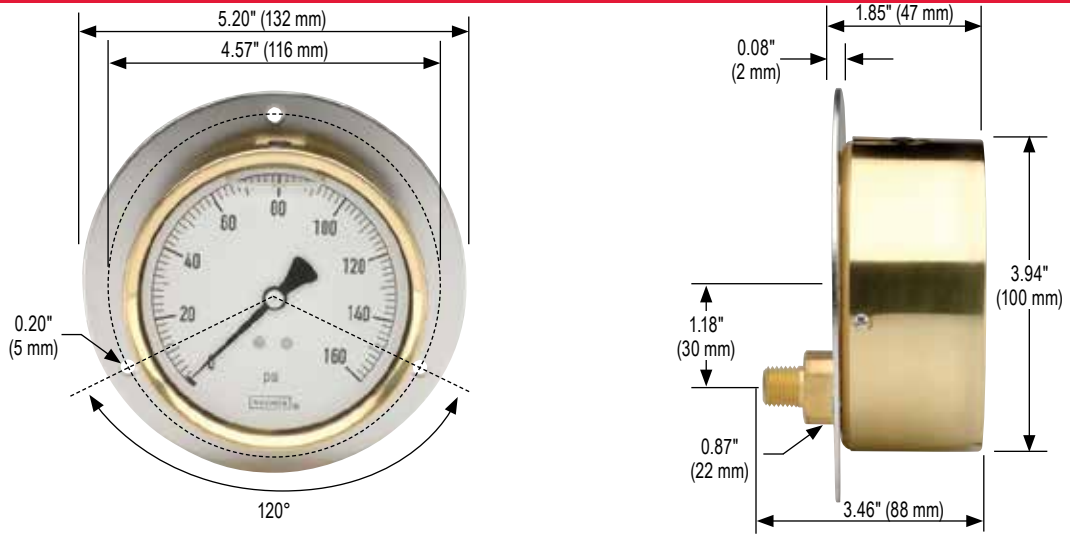

25-310 Chrome Triangular Bezel with U-Clamp

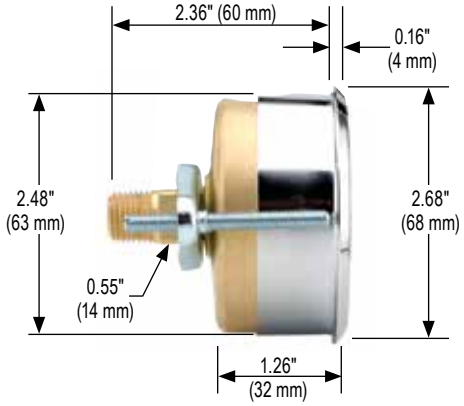

40-310 Chrome Triangular Bezel with U-Clamp

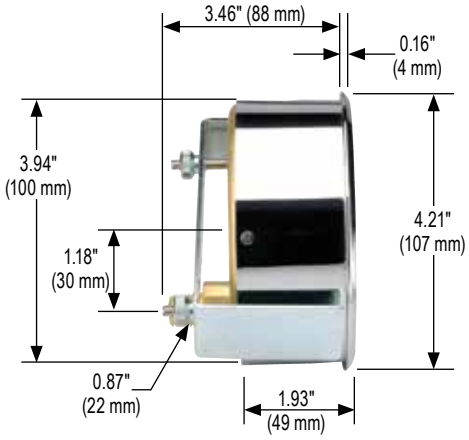

All Stainless Steel, Dry & Liquid Filled

NOSHOK



400/500 SERIES

- Corrosion-resistant fillable dry or liquid-filled gauge
- Vacuum and compound ranges through 0 psi to 20,000 psi
- 1-1/2", 2-1/2", 4 and 6" gauge sizes
- Stainless Steel case
- 316 Stainless Steel wetted parts

OPERATING SPECIFICATIONS

1. Working Pressure Limitations

a. Dynamic Pressure
The working pressure should be limited to 60% of the dial range.

b. Static Pressure
The working pressure, where no sharp fluctuations occur, should be limited to:
≤15,000 psi: 90% of the dial range
>15,000 psi: 75% of the dial range

APPLICATIONS

- Chemical processing
- Oil field & offshore
- Paper mills
- Agriculture plants
- Marine
- Water & wastewater

* For every 18 °F (10 °C) shift in temperature from which the gauge is calibrated, the user can experience up to ±0.4% additional error.

** See page 51 for gauge fill options.

For details on accuracy/standard dial configuration and dial layouts, see pages 56-61.

	SERIES	SPECIFICATIONS
Pressure ranges	400/500 Series (all)	Vacuum and compound ranges through 0 psi to 20,000 psi
Accuracy	15-401, 15-411	±2.5% full scale
	25-400, 25-410, 25-500, 25-510	±1.6% full scale
	40-400, 40-410, 40-500, 40-510, 60-400, 60-410, 60-500, 60-510	±1% full scale
Temperature ranges*	15-401, 15-411	Media -40 °F to 212 °F (-40 °C to 100 °C) Ambient -40 °F to 140 °F (-40 °C to 60 °C)
	25-400, 25-410, 40-400, 40-410, 60-400, 60-410	Media -40 °F to 392 °F (-40 °C to 200 °C) Ambient -40 °F to 140 °F (-40 °C to 60 °C)
	500 Series (all)	Media -4 °F to 212 °F (-20 °C to 100 °C) Glycerin fill -40 °F to 212 °F (-40 °C to 100 °C) Special fill Ambient -4 °F to 140 °F (-20 °C to 60 °C) Glycerin fill -40 °F to 140 °F (-40 °C to 60 °C) Special fill
Measuring element	15-401, 15-411, 25-400, 25-410, 25-500, 25-510, 40-400, 40-410, 40-500, 40-510, 60-400, 60-410, 60-500, 60-510 **(up to 600 psi)**	316 Stainless Steel C-Type Bourdon tube
	25-400, 25-410, 25-500, 25-510, 40-400, 40-410, 40-500, 40-510, 60-400, 60-410, 60-500, 60-510 **(greater than 600 psi)**	Coiled safety tube
Connection	15-401, 15-411	1/8″ NPT, 316 Stainless Steel
	25-400, 25-410, 25-500, 25-510	1/4″ NPT, 316 Stainless Steel
	40-400, 40-410, 40-500, 40-510, 60-400, 60-410, 60-500, 60-510	1/2″ NPT, 316 Stainless Steel. 9/16″ – 18 high pressure connections are standard on 0 - 30,000 psi and higher
Case	15-401, 15-411, 40-400, 40-410, 60-400, 60-410, 60-500, 60-510	304 Stainless Steel with safety relief plug
	25-400, 25-410, 25-500, 25-510, 40-500, 40-510	Polished 304 Stainless Steel with safety relief plug
Cover ring	15-401, 15-411, 25-400, 25-410, 25-500, 25-510, 40-400, 40-410, 40-500, 40-510	Polished 304 Stainless Steel
	60-400, 60-410, 60-500, 60-510	Polished 304 Stainless Steel bayonet ring
Lens	15-401, 15-411, 40-400, 40-410, 40-500, 40-510	Instrument glass
	25-400, 25-410, 25-500, 25-510	Trogamide
	60-400, 60-410, 60-500, 60-510	Laminated safety glass
Pointer	115-401, 15-411	Black finished Aluminum
	25-400, 25-410, 25-500, 25-510, 40-400, 40-410, 40-500, 40-510	Balanced Aluminum, black finish
	60-400, 60-410, 60-500, 60.510	Balanced micro-adjustable Aluminum, black finish
Dial	15-401, 15-411	Aluminum, white background with black scale. Single scale psi. UV resistant
	25-400, 25-410, 25-500, 25-510, 40-400, 40-410, 40-500, 40-510, 60-400, 60-410, 60-500, 60-510	Aluminum, white background with black scale. UV resistant.
Movement	15-401, 15-411, 25-400, 25-410, 25-500, 25-510	Stainless Steel with highly polished bearing surfaces
	40-400, 40-410, 40-500, 40-510	All Stainless Steel with internal zero stop and highly polished bearing surfaces
	60-400, 60-410, 60-500, 60-510	Stainless Steel with highly polished bearing surfaces An internal zero stop is standard
Fill liquid**	25-500, 25-510, 40-500, 40-510, 60-500, 60-510	Glycerin

⚠ **WARNING:** This product can expose you to chemicals including Lead and Nickel, which are known to the State of California to cause cancer and birth defects or other reproductive harm. For more information go to www.P65Warnings.ca.gov

ORDERING INFORMATION

GAUGE SIZE	**15**	1-1/2"†††	**25**	2-1/2"	**40**	4" *	**60** 6" *
CASE TYPES	**400**	All SS, dry/fillable, bottom connection	**410**	All SS, dry/fillable, back connection	**502**	SS case, solid front, liquid filled, bottom connection	
	401	All SS, dry, bottom connection	**411**	All SS, dry, back connection			
	402	SS case, solid front, dry, bottom connection	**500**	SS case, liquid filled, bottom connection	**510**	SS case, liquid filled, back connection	
PRESSURE RANGES	**30vac**	-30 inHg to 0 psi ***	**30**	0 psi to 30 psi	**1000**	0 psi to 1,000 psi	
	30/15	-30 inHg to 0 psi to 15 psi ***	**60**	0 psi to 60 psi	**1500**	0 psi to 1,500 psi	
	30/30	-30 inHg to 0 psi to 30 psi ***	**100**	0 psi to 100 psi	**2000**	0 psi to 2,000 psi	
	30/60	-30 inHg to 0 psi to 60 psi ***	**160**	0 psi to 160 psi	**3000**	0 psi to 3,000 psi	
	30/100	-30 inHg to 0 psi to 100 psi ***	**200**	0 psi to 200 psi	**5000**	0 psi to 5,000 psi	
	30/160	-30 inHg to 0 psi to 160 psi ***	**300**	0 psi to 300 psi	**6000**	0 psi to 6,000 psi	
	30/200	-30 inHg to 0 psi to 200 psi ***	**400**	0 psi to 400 psi	**10000**	0 psi to 10,000 psi	
	30/300	-30 inHg to 0 psi to 300 psi ***	**600**	0 psi to 600 psi	**15000**	0 psi to 15,000 psi	
	15	0 psi to 15 psi	**800**	0 psi to 800 psi	**20000**	0 psi to 20,000 psi **	
SCALE OPTIONS	**psi**	psi single scale	**psi/kg/cm²**	psi/kg/cm² dual scale			
	psi/kPa	psi/kPa dual scale	**psi/bar**	psi/bar dual scale			
CONNECTION SIZES	**1/8**	1/8" NPT	**1/2**	1/2" NPT	**SST**	SAE J1926-3:7/16-20 Adjustable	
	1/4	1/4" NPT	**9/16-18**	9/16"-18 UNF 2B high pressure cone			
OPTIONS	**SSFF**	304SS Front Flange	**SSFR**	304SS Flange Ring	**LM**	Laser Marking	
	SSRF	304SS Rear Flange	**AP**	Adjustable Pointer	**ST**	Stainless Steel Tagging	
	SSBU	Stainless Steel Bezel & U-Clamp	**SG**	Safety Glass Lens	**ST5**	Stainless Steel Threaded Orifice 0.5 mm	
	SPMC	304SS Panel Mount Clamp	**MIP**	Maximum Indicating Pointer †	**ST8**	Stainless Steel Threaded Orifice 0.8 mm	
	PMC	Steel Panel Mount Clamp	**SP**	Red Set Pointer			

Please consult your local NOSHOK Distributor or NOSHOK, Inc. for availability and delivery information.

NOTES: Refer to 400/500 Series options & Accessories chart on page 52 for availability by part number.
Cleaning for Oxygen Service (O2) is available only for dry or HL filled gauges

* On 40-400, 40-410, 40-500, 40-510, 60-400, 60-410, 60-500, and 60-510 models with 20,000 psi, the accuracy is ±1.5% or 1.6%

** 4" model only available with solid front case types

*** Ammonia gauges are available in these ranges. To order, add " – AMMONIA" at the end of the part number.

† GY40 fill is standard for liquid filled gauges

††† Size only available for the 401/411 Series

EXAMPLE **40 – 500 – 600 – psi – 1/4†† – MIP**

Gauge size .....4"
Case type ..... SS case, liquid filled, bottom connection
Pressure range & scale option .....0 psi to 600 psi
Connection size†† ..... 1/4" NPT
Option..... Maximum Indicating Pointer

†† Only include in part number if non-standard connection size is ordered.

NOTES: See standard connection sizes chart on page 49.
Shaded portions of this part number example are not required unless a non-standard connection size or an option is needed.

15-401

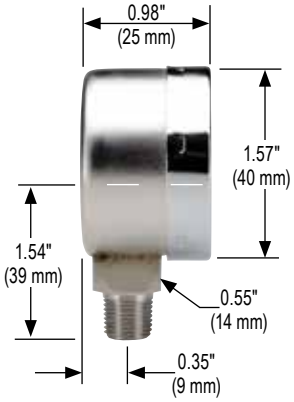

25-400/500



40-400/500



* Dimension is for 1/2" process connection. 1/4" process connection = 3.15" (80 mm)

Dimensions

60-400/500

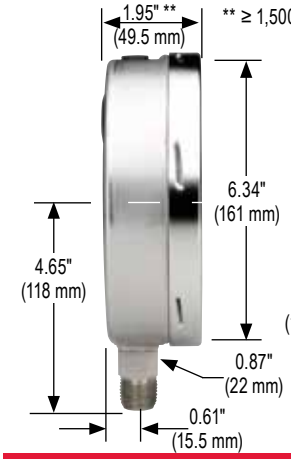

15-411

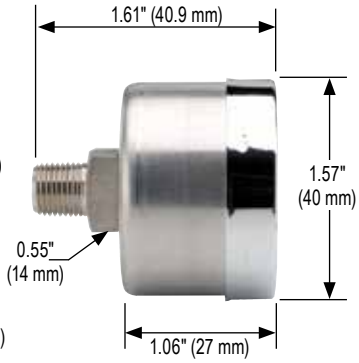

25-410/510

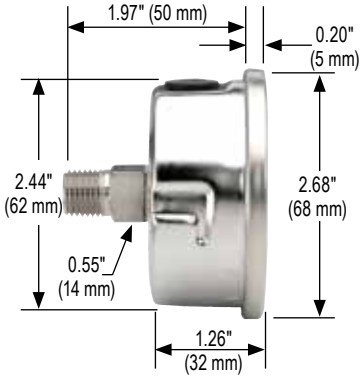

40-410/510

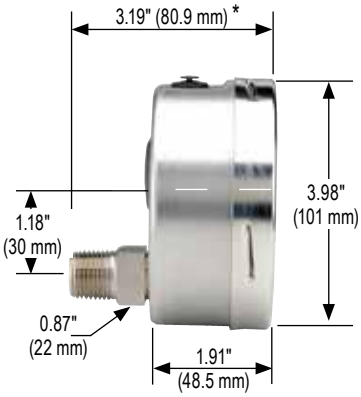

60-410/510

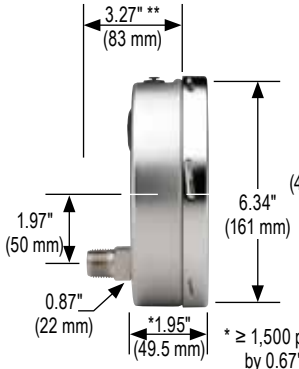

40-400/500 Front Flange

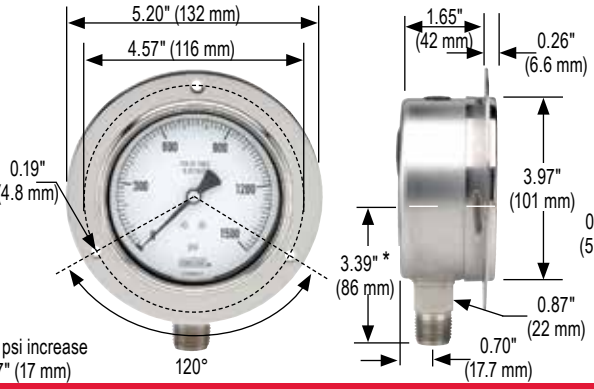

60-400/500 Front Flange

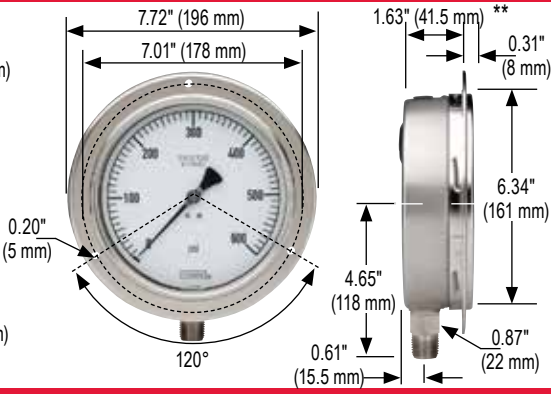

25-410/510 Front Flange

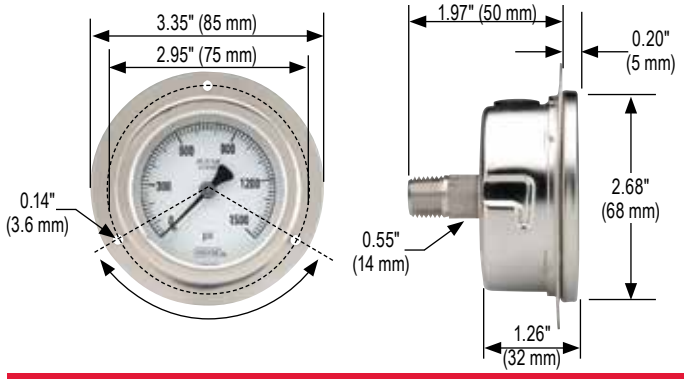

40-410/510 Front Flange

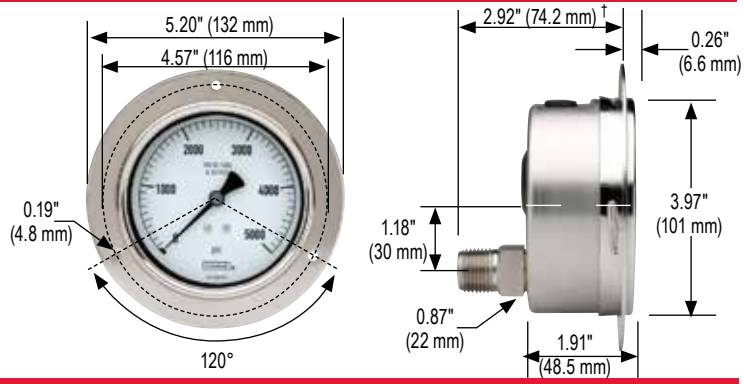

60-410/510 Front Flange

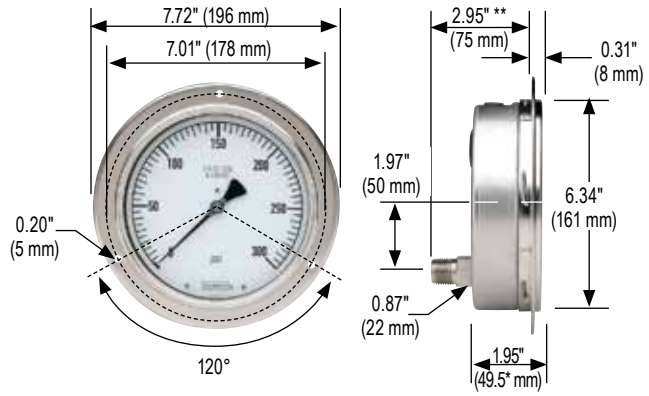

40-400/500 Rear Flange

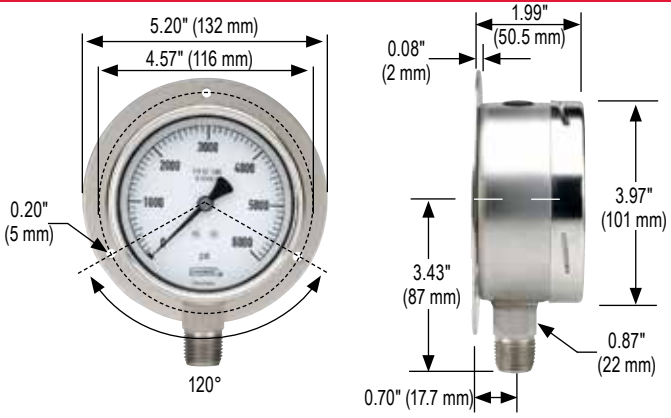

60-400/500 Rear Flange

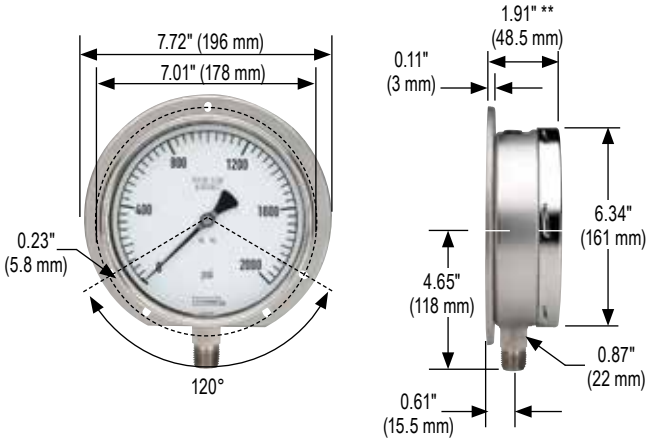

40-410/510 Rear Flange

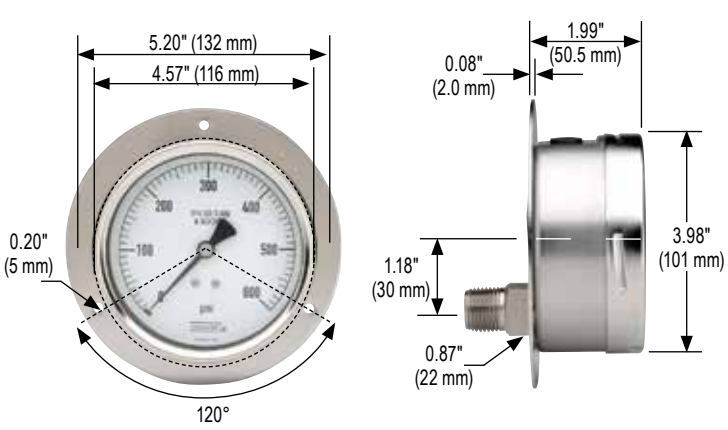

60-410/510 Rear Flange

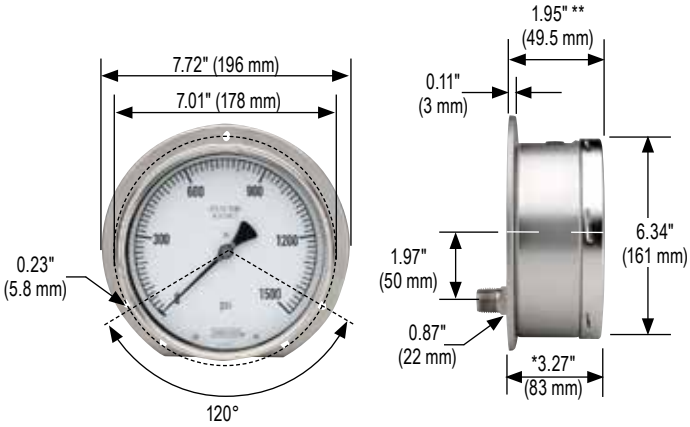

25-410/510 Flange Ring

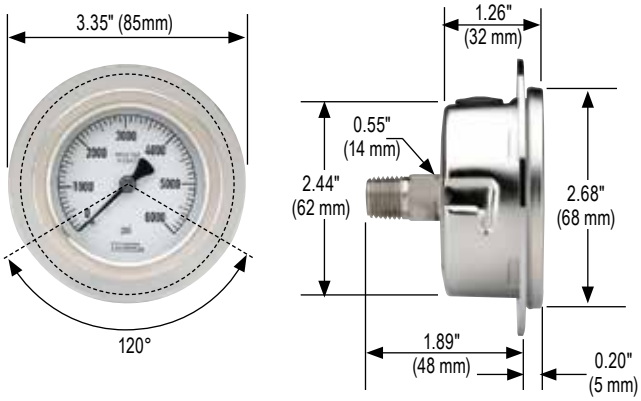

25-410/510 Panel Mount Clamp

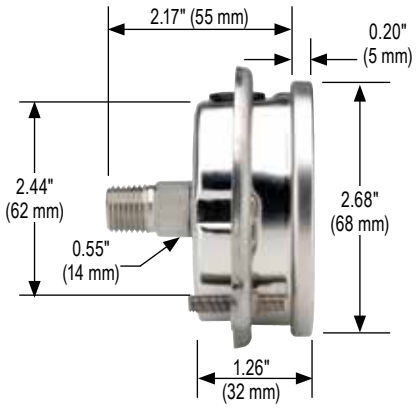

40-410/510 SS Narrow Bezel w/U-Clamp

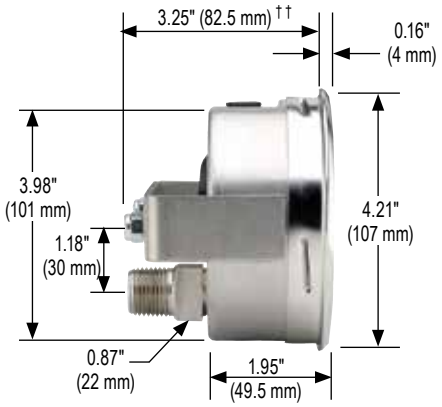

60-410/510 SS Narrow Bezel w/U-Clamp

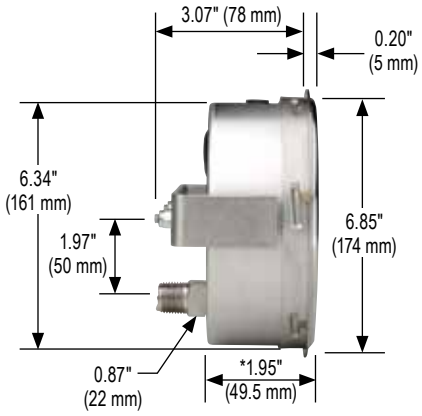

* Dimension is for 1/2" process connection, 1/4" process connection = 3.15" (80 mm)

** ≥ 1,500 psi increase by 0.67" (17 mm)

† Dimension is for 1/2" process connection, 1/4" process connection = 2.91" (74 mm)

†† Dimension is for 1/2" process connection, 1/4" process connection = 2.99" (76 mm)

All Stainless Steel, Dry & Liquid Filled, Extreme High Pressure



402/502 SERIES

- Corrosion-resistant dry or liquid-filled gauge for high pressure applications
- Ranges from 0 psi to 30,000 psi through 0 psi to 85,000 psi
- 4" and 6" gauge sizes
- Solid front design with a blow out back in accordance to EN 837, S3 Safety Pattern
- Stainless Steel case
- NiFe alloy/316L Stainless Steel wetted parts
- DIN 16001 compliant

OPERATING SPECIFICATIONS

1. Working Pressure Limitations

a. Dynamic Pressure
The working pressure should be limited to 65% of the dial range.

b. Static Pressure
The working pressure, where no sharp fluctuations occur, should be limited to 75% of the dial range

	SERIES	SPECIFICATIONS
Pressure ranges	402, 412 & 500 Series	0 psi to 30,000 psi through 0 psi to 85,000 psi
Accuracy	≤40,000 psi	±1.6% full scale (optional 1% increased accuracy)
	≥50,000 psi	±1% full scale (85,000 psi is ±1.6% accuracy)
Temperature ranges*	402 & 412 Series	Media -40 °F to 392 °F (-40 °C to 200 °C) Ambient -40 °F to 140 °F (-40 °C to 60 °C)
	502 Series	Media -4 °F to 212 °F (-20 °C to 100 °C) Glycerin fill Ambient -4 °F to 140 °F (-20 °C to 60 °C) Glycerin fill
Measuring element	402/502 Series (all)	NiFe alloy
Connection	402/502 Series (all)	316L Stainless Steel
Case	402/502 Series (all)	Stainless Steel, solid front with blowout back
Cover ring	402/502 Series (all)	Stainless Steel bayonet ring
Lens	402/502 Series (all)	Laminated safety glass
Pointer	402/502 Series (all)	Black finished Aluminum
Dial	402/502 Series (all)	Aluminum, white background with black scale. UV resistant.
Movement	402/502 Series (all)	Stainless Steel with highly polished bearing surfaces
Fill liquids	502 Series (Bottom connected only)	Glycerin

* For every 68 °F (20 °C) shift in temperature from which the gauge is calibrated, the user can experience up to ±0.4% additional error.

APPLICATIONS

- Pumps & compressors
- High pressure processing
- Test equipment & systems
- Water jet cutting

For details on accuracy/standard dial configuration and dial layouts, see pages 56-61.

⚠ **WARNING:** This product can expose you to chemicals including Lead and Nickel, which are known to the State of California to cause cancer and birth defects or other reproductive harm. For more information go to www.P65Warnings.ca.gov

ORDERING INFORMATION						
GAUGE SIZE	**40**	4"	**60**	6" *		
CASE TYPES	**402**	Dry, bottom connection	**412**	Dry, lower back connection	**502**	Liquid filled, bottom connection
PRESSURE RANGES	**30000**	0 psi to 30,000 psi	**50000**	0 psi to 50,000 psi	**75000**	0 psi to 75,000 psi
	40000	0 psi to 40,000 psi	**60000**	0 psi to 60,000 psi	**85000**	0 psi to 85,000 psi **
SCALE OPTIONS	**psi**	psi single scale	**psi/kg/cm²**	psi/kg/cm² dual scale		
	psi/kPa	psi/kPa dual scale	**psi/bar**	psi/bar dual scale		
CONNECTION SIZES ***	**9/16-18**	9/16"-18 UNF 2B high pressure cone - Female	**9/16-HPM**	9/16"-18 UNF 2A left hand thread - Male		
OPTIONS	**BRSP**	Bayonet Ring Adjustable Set Pointer	**SP**	Red Set Pointer	**IA**	Increased Accuracy
	LM	Laser Marking	**SSFF**	304SS Front Flange		
	SL	Silicone Fill	**ST**	Stainless Steel Tagging		

Please consult your local NOSHOK Distributor or NOSHOK, Inc. for availability and delivery information.

NOTE: Cleaning for Oxygen Service (O2) is available only for dry or HL filled gauges

* Bottom connection only.
** Only available on 60-402 and 60-502 models, with ±1.6% accuracy.
*** Additional process connection sizes available, consult factory.

EXAMPLE

40 – 502 – 30000 – psi – 9/16-HPM†† – BRSP

Gauge size .....4"
Case type .....Liquid filled, bottom connection
Pressure range & scale option .....0 psi to 30,000 psi
Connection size††.....9/16"-18 UNF 2A left hand thread - Male
Option.....Bayonet Ring Adjustable Set Pointer

†† Only include in part number if non-standard connection size is ordered.

NOTES: See standard connection sizes chart on page 49.
Shaded portions of this part number example are not required unless a non-standard connection size or an option is needed.

9/16"-18 UNF 2B High Pressure Cone Connection

Female

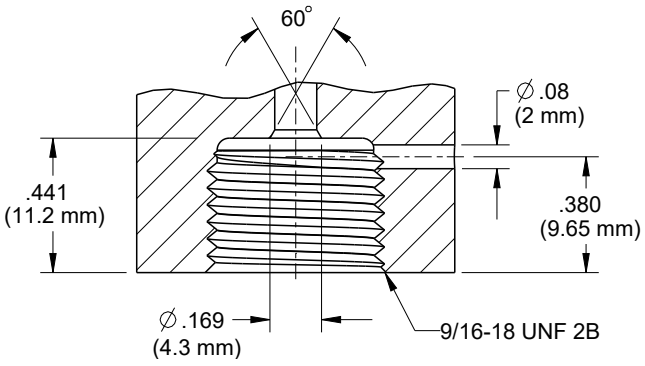

9/16"-18 UNF 2A left hand thread

Male

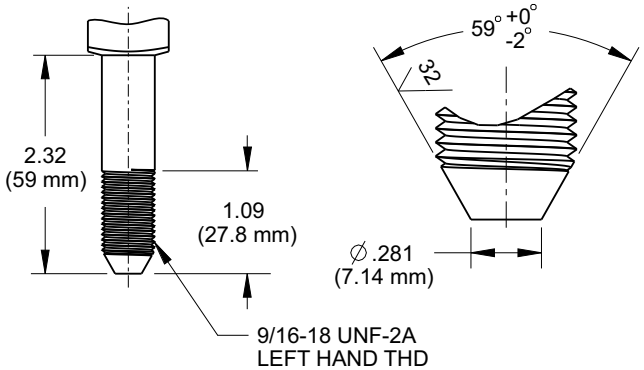

Dimensions

40-402/502

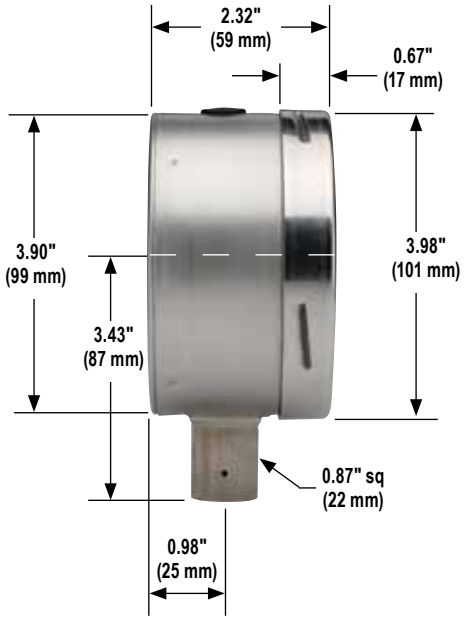

40-412

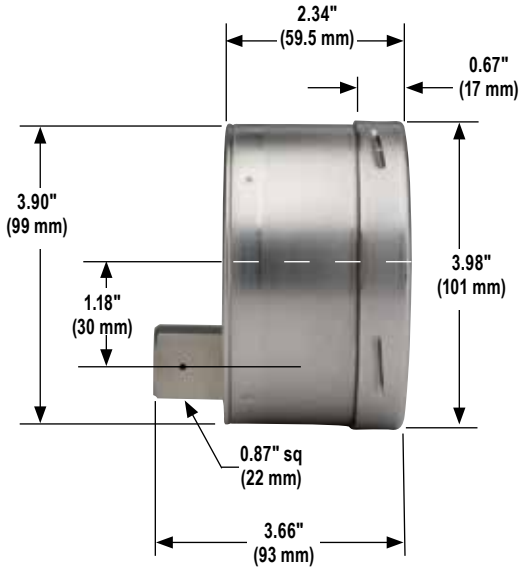

60-402/502

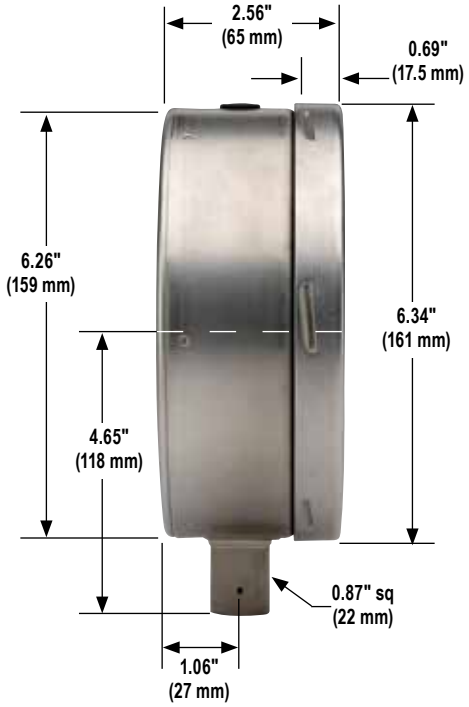

40-402/502 Front Flange

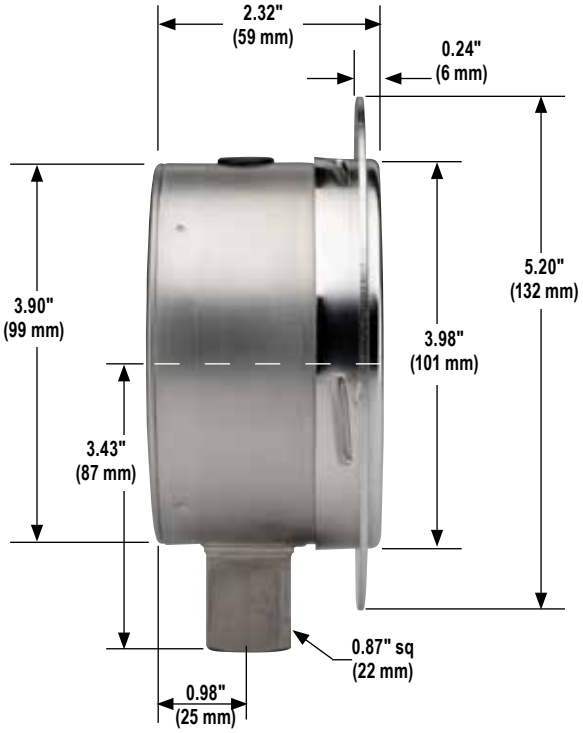

40-412 Front Flange

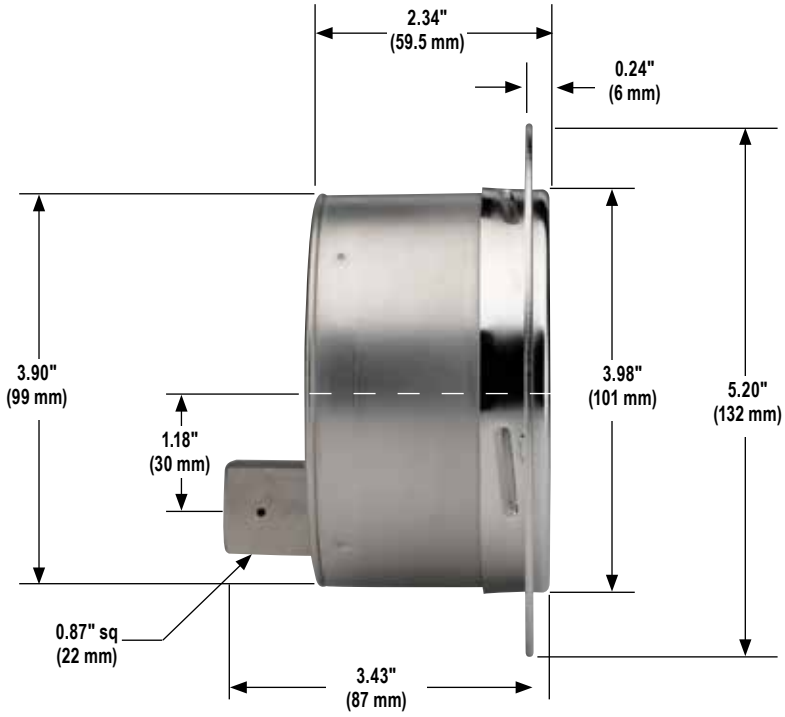

60-402/502 Front Flange

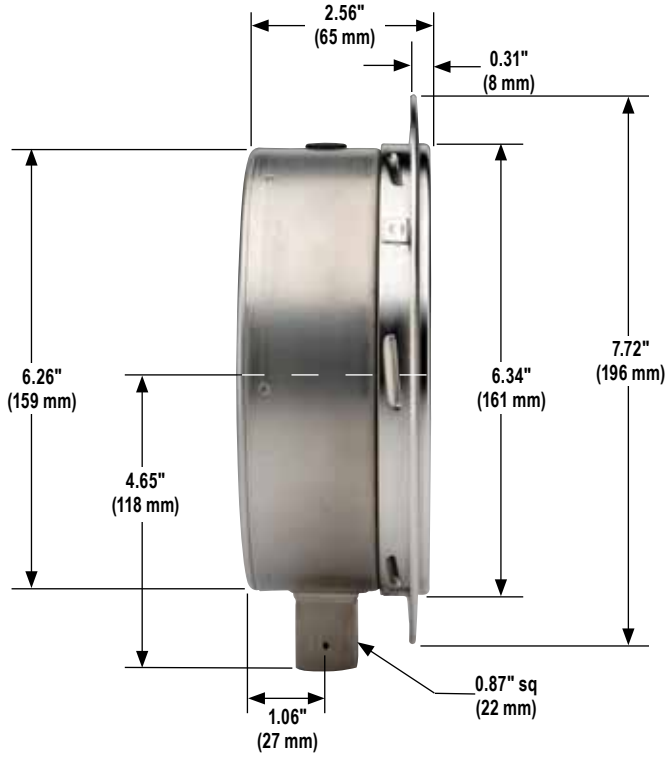



600/700 SERIES

- Turret style dry (field fillable) and liquid filled process gauges
- Vacuum and compound ranges through 0 psi to 15,000 psi
- 4-1/2" gauge sizes
- Solid front and blow-out back
- Black Polypropylene safety case,
  700 Series low pressure - black PBT safety case
- 316 Stainless Steel or Brass wetted parts

	SERIES	SPECIFICATIONS
Pressure ranges	600/700 Series	Vacuum and compound ranges through 0 psi to 15,000 psi
	700 (low pressure)	Vacuum in$H_2$0 to 10 psi
Accuracy	600/700 Series	±0.5% full scale
	700 (low pressure)	±1.6% full scale
Temperature ranges*	45-640	Media -4 °F to 150 °F (-20 °C to 65 °C) Ambient -40 °F to 150 °F (-40 °C to 65 °C)
	45-740	Media -40 °F to 212 °F (-40 °C to 100 °C) 500 °F (260 °C) Maximum for short term/intermittent Ambient -40 °F to 150 °F (-40 °C to 65 °C)
	45-740 (low pressure)	Media -4 °F to 212 °F (-20 °C to 100 °C) Ambient -4 °F to 140 °F (-20 °C to 60 °C)
	45-660	Media -4 °F to 150 °F (-20 °C to 65 °C) Glycerin fill -40 °F to 150 °F (-40 °C to 65 °C) Special fill Ambient -4 °F to 150 °F (-20 °C to 65 °C) Glycerin fill -40 °F to 150 °F (-40 °C to 65 °C) Special fill
	45-760	Media -4 °F to 212 °F (-20 °C to 100 °C) Glycerin fill -40 °F to 212 °F (-40 °C to 100 °C) Special fill 250 °F (130 °C) Maximum for short term/intermittent Ambient -4 °F to 150 °F (-20 °C to 65 °C) Glycerin fill -40 °F to 150 °F (-40 °C to 65 °C) Special fill
Case	600/700 Series	Turret style black Polypropylene case Solid front with blow-out back
	700 Series (low pressure)	Turret style black PBT safety case Solid front with blow-out back
Bayonet ring	600/700 Series (all)	Threaded black PBT
Lens	600/700 Series (all)	Acrylic
Measuring Element	45-640, 45-660 **(≤ 600 psi)**	Copper alloy C-Type Bourdon tube
	45-740, 45-760 **(≤ 600 psi)**	316 Stainless Steel C-Type Bourdon tube
	45-740 (low pressure)	316 Stainless Steel diaphragm capsule
	600/700 Series (all) **(>600 psi)**	316 Stainless Steel coiled safety Bourdon tube
Connection	45-640, 45-660	1/4″ NPT, brass
	45-740, 45-760	1/4″ NPT or 1/2″ NPT, 316 Stainless Steel
Movement	45-640, 45-660	Brass and nickel-silver with highly polished bearing surfaces. An internal zero stop is standard.
	45-740, 45-760	Stainless steel with highly polished bearing surfaces. An internal zero stop is standard.
Pointer	600/700 Series (all)	Balanced micro-adjustable aluminum, black finish
Dial	600/700 Series (all)	Aluminum, white background with black scale. UV resistant.
Fill liquid **	45-660, 45-760	Glycerin

OPERATING SPECIFICATIONS

1. Working Pressure Limitations

a. Dynamic Pressure
The working pressure should be limited to 60% of the dial range. Max. 0.9x full scale.

b. Static Pressure
The working pressure, where no sharp fluctuations occur, should be limited to 90% of the dial range. Max. 1x full scale.

c. Short term max. 1.5x full scale (<10,000 psi).

APPLICATIONS

- Injection molding machines
- Laboratory & test equipment
- Power generation
- Oil field & offshore
- Utilities
- Water & wastewater

* For every 18 °F (10 °C) shift in temperature from which the gauge is calibrated, the user can experience up to ±0.4% additional error.

** See page 51 for gauge fill options.

For details on accuracy/standard dial configuration and dial layouts, see pages 52-56.

⚠ **WARNING:** This product can expose you to chemicals including Lead and Nickel, which are known to the State of California to cause cancer and birth defects or other reproductive harm. For more information go to www.P65Warnings.ca.gov

ORDERING INFORMATION

GAUGE SIZES	**45**	4-1/2″					
CASE TYPES	**640**	Brass, dry, bottom connection	**660**	Brass, liquid filled, bottom connection			
	740	SS, dry, bottom connection	**760**	SS, liquid filled, bottom connection			
PRESSURE RANGES	**30 inH$_2$O Vac**	-30 inH$_2$O to 0 inH$_2$O	**30vac**	-30 inHg to 0 psi	**15**	0 psi to 15 psi	**1000** 0 psi to 1,000 psi
	60 inH$_2$O Vac	-60 inH$_2$O to 0 inH$_2$O	**30/15**	-30 inHg to 0 to 15 psi	**30**	0 psi to 30 psi	**1500** 0 psi to 1,500 psi
	10 inH$_2$O	0 inH$_2$O to 10 inH$_2$O	**30/30**	-30 inHg to 0 to 30 psi	**60**	0 psi to 60 psi	**2000** 0 psi to 2,000 psi
	15 inH$_2$O	0 inH$_2$O to 15 inH$_2$O	**30/60**	-30 inHg to 0 to 60 psi	**100**	0 psi to 100 psi	**3000** 0 psi to 3,000 psi
	20 inH$_2$O	0 inH$_2$O to 20 inH$_2$O	**30/100**	-30 inHg to 0 to 100 psi	**160**	0 psi to 160 psi	**5000** 0 psi to 5,000 psi
	30 inH$_2$O	0 inH$_2$O to 30 inH$_2$O	**30/160**	-30 inHg to 0 to 160 psi	**200**	0 psi to 200 psi	**6000** 0 psi to 6,000 psi
	40 inH$_2$O	0 inH$_2$O to 40 inH$_2$O	**30/200**	-30 inHg to 0 to 200 psi	**300**	0 psi to 300 psi	**10000** 0 psi to 10,000 psi
	60 inH$_2$O	0 inH$_2$O to 60 inH$_2$O	**30/300**	-30 inHg to 0 to 300 psi	**400**	0 psi to 400 psi	**15000** 0 psi to 15,000 psi
	80 inH$_2$O	0 inH$_2$O to 80 inH$_2$O	**5**	0 psi to 5 psi	**600**	0 psi to 600 psi	
	100 inH$_2$O	0 inH$_2$O to 100 inH$_2$O	**10**	0 psi to 10 psi	**800**	0 psi to 800 psi	
SCALE OPTIONS	**psi**	psi single scale	**psi/kg/cm^2**	psi/kg/cm^2 dual scale	**psi/bar**	psi/bar dual scale	
CONNECTION SIZES	**1/4**	1/4″ NPT	**1/2**	1/2″ NPT			
OPTIONS	**SG**	Safety Glass Lens	**CPMR**	Uninstalled Chrome Panel Mount Ring	**BT3**	Brass Threaded Orifice 0.3 mm	
	GL	Glass Lens	**OS**	Overload Stop	**BT8**	Brass Threaded Orifice 0.8 mm	
	MIP	Maximum Indicating Pointer*	**LM**	Laser Marking	**ST8**	316SS Threaded Orifice 0.8 mm	
	BPMR	Uninstalled Black Panel Mount Ring	**ST**	Stainless Steel Tagging			

Please consult your local NOSHOK Distributor or NOSHOK, Inc. for availability and delivery information.

NOTES: Refer to 600/700 Series Options & Accessories chart on page 52 for availability by part number.
Cleaning for Oxygen Service (O2) is available only for dry or HL filled gauges

* GY40 fill is standard for liquid filled gauges

EXAMPLE

45 – 740 – 100 – psi – 1/4† – ST8

Gauge size ..... 4-1/2"
Case type ..... SS internals, dry, bottom connection
Pressure range & scale option .....0 psi to 100 psi
Connection size† ..... 1/4" NPT
Option..... 316SS Threaded Orifice 0.8 mm

† Only include in part number if non-standard connection size is ordered.

NOTES: See standard connection sizes chart on page 54.
Shaded portions of this part number example are not required unless a non-standard connection size or an option is needed.

45-640/660 & 45-740/760

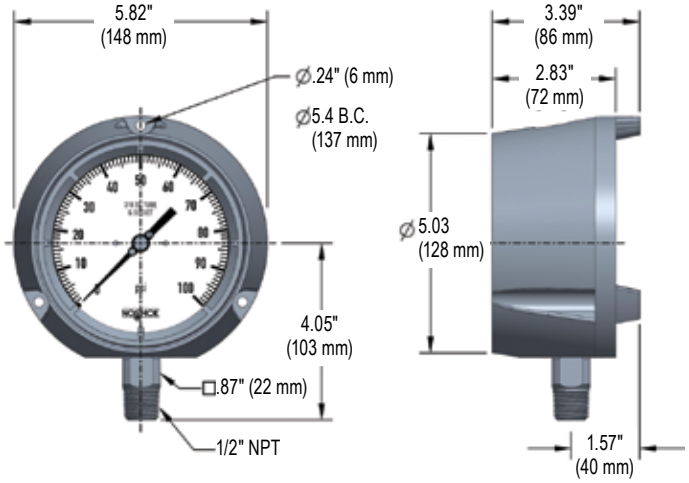

45-640/660 & 45-740/760 Panel Mount Ring

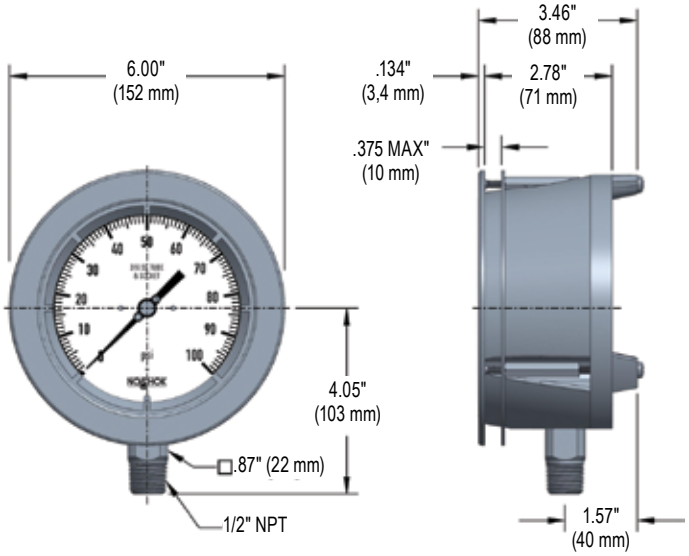

Precision Test



800 SERIES

- Highly accurate dry gauge
- Vacuum and compound ranges through 0 psi to 6,000 psi
- 6" gauge size
- Stainless Steel case
- Beryllium copper, 316 Stainless Steel, and Brass wetted parts

OPERATING SPECIFICATIONS

1. Working Pressure Limitations

a. Static Pressure

The working pressure, where no sharp fluctuations occur, should be limited to 100% of the dial range.

NOTE: 800 Series Precision Test gauges are not intended for dynamic applications.

	SERIES	SPECIFICATIONS
Pressure ranges	60-800	Vacuum and compound ranges through 0 psi to 6,000 psi
Accuracy	60-800	±0.25% full scale
Temperature ranges*	60-800	Media -40 °F to 180 °F (-40 °C to 80 °C) Ambient -40 °F to 140 °F (-40 °C to 60 °C)
Measuring element	60-800	Beryllium copper Bourdon tube to 1,000 psi 316 SS Bourdon tube 1,500 psi to 6,000 psi
Connection	60-800	1/4″ NPT bottom connection, Brass
Case	60-800	304 Stainless Steel
Cover ring	60-800	304 Stainless Steel
Lens	60-800	Instrument glass
Pointer	60-800	Adjustable knife-edge pointer
Dial	60-800	Aluminum, white mirrored background with black scale.
Movement	60-800	Brass with jeweled bearings Nickel-silver pinion gear and shafts

* For every 18 °F (10 °C) shift in temperature from which the gauge is calibrated, the user can experience up to ±0.4% additional error.

APPLICATIONS

- Aerospace equipment
- Gauge repair facilities
- Laboratory & test equipment
- Precision measurement

For details on accuracy/standard dial configuration and dial layouts, see pages 56-61.

⚠ **WARNING:** This product can expose you to chemicals including Lead and Nickel, which are known to the State of California to cause cancer and birth defects or other reproductive harm. For more information go to www.P65Warnings.ca.gov

ORDERING INFORMATION							
GAUGE SIZE	**60**	6″					
CASE TYPE	**800**	SS Case, bottom connection					
PRESSURE RANGES	**30vac**	-30 inHg to 0 psi	**30/300**	-30 inHg to 0 to 300 psi	**300**	0 psi to 300 psi	**5000** 0 psi to 5,000 psi
	30/15	-30 inHg to 0 to 15 psi	**15**	0 psi to 15 psi	**400**	0 psi to 400 psi	**6000** 0 psi to 6,000 psi
	30/30	-30 inHg to 0 to 30 psi	**30**	0 psi to 30 psi	**600**	0 psi to 600 psi	
	30/60	-30 inHg to 0 to 60 psi	**60**	0 psi to 60 psi	**1000**	0 psi to 1,000 psi	
	30/100	-30 inHg to 0 to 100 psi	**100**	0 psi to 100 psi	**1500**	0 psi to 1,500 psi	
	30/160	-30 inHg to 0 to 160 psi	**160**	0 psi to 160 psi	**2000**	0 psi to 2,000 psi	
	30/200	-30 inHg to 0 to 200 psi	**200**	0 psi to 200 psi	**3000**	0 psi to 3,000 psi	
SCALE OPTION	**psi**	psi single scale					
CONNECTION SIZES	**1/4**	1/4″ NPT	**1/2**	1/2″ NPT	**SST**	SAE J1926-3: 7/16-20 Adjustable	
OPTIONS	**SSFF**	304SS Front Flange	**ST**	Stainless Steel Tagging			
	SSRF	304SS Rear Flange	**BP3**	Brass Press Fit Orifice 0.3 mm			
	GC	Gauge Carrying Case	**BT8**	Brass Threaded Orifice 0.8 mm			
	LM	Laser Marking					

Please consult your local NOSHOK Distributor or NOSHOK, Inc. for availability and delivery information.

NOTES: Refer to 800 Series Options & Accessories chart on page 52 for availability by part number.
Cleaning for Oxygen Service (O2) is available only for dry or HL filled gauges

EXAMPLE

60 – 800 – 100 – psi – 1/2† – GC

Gauge size .....6"
Case type .....SS case, bottom connection
Pressure range & scale option .....0 psi to 100 psi
Connection size† ..... 1/2" NPT
Option.....Gauge Carrying Case

† Only include in part number if non-standard connection size is ordered.

NOTES: See standard connection sizes chart on page 49.
Shaded portions of this part number example are not required unless a non-standard connection size is ordered or an option is chosen.

60-800* **60-800 Front Flange** **60-800 Rear Flange**

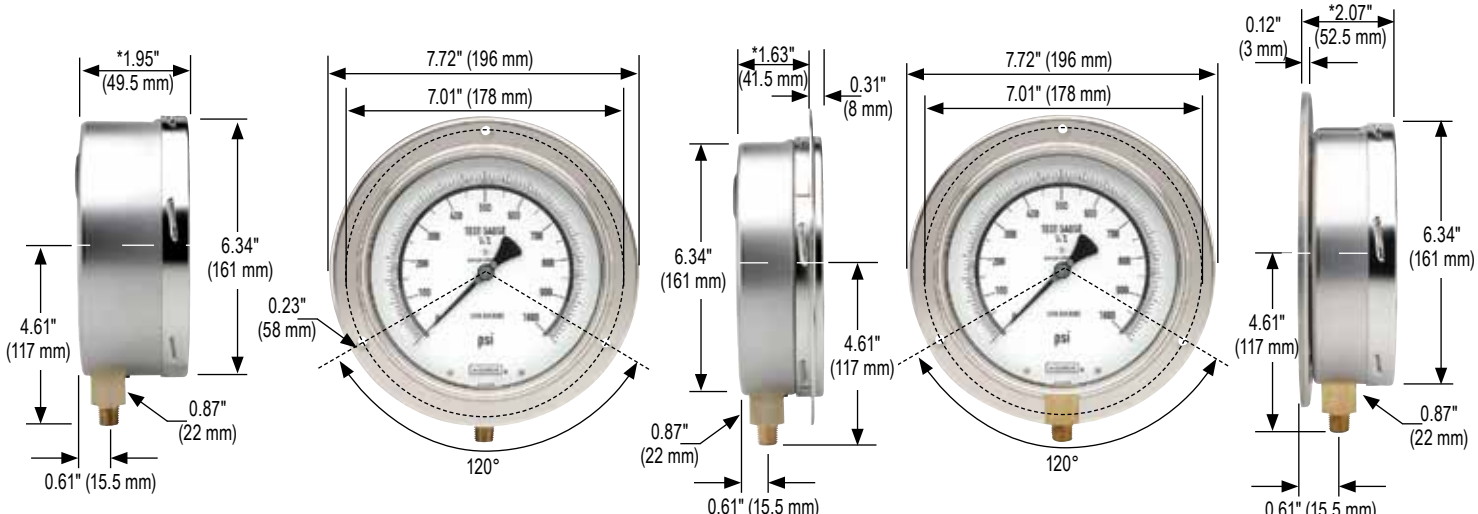

*For ranges ≤60 psi and ≥1,500 psi, increase by 0.63″ (16 mm)

ABS & Stainless Steel Case, Liquid Filled



900 SERIES

- High quality liquid filled gauge
- Vacuum and compound ranges through 0 psi to 15,000 psi
- 1-1/2", 2", 2-1/2" and 4" gauge sizes
- Impact-resistant ABS and Stainless Steel case
- Copper alloy and Brass wetted parts

OPERATING SPECIFICATIONS

1. Working Pressure Limitations

a. Dynamic Pressure
The working pressure should be limited to 60% of the dial range.

b. Static Pressure
The working pressure, where no sharp fluctuations occur, should be limited to 90% of the dial range

APPLICATIONS

- Automotive
- Construction
- Hydraulics & pneumatics
- Power generation
- Transportation
- Water management

	SERIES	SPECIFICATIONS
Pressure ranges	900 Series (all)	Vacuum and compound ranges through 0 psi to 15,000 psi***
Accuracy	15-901, 15-910, 15-911	±2.5% full scale
	20-901, 20-911, 25-900, 25-910, 25-901, 25-911	±1.6% full scale
	40-901, 40-911	±1% full scale
Temperature ranges*	900 Series (all)	Media -4 °F to 140 °F (-20 °C to 60 °C) Glycerin fill -40 °F to 140 °F (-40 °C to 60 °C) Special fill Ambient -4 °F to 140 °F (-20 °C to 60 °C) Glycerin fill -40 °F to 140 °F (-40 °C to 60 °C) Special fill
Measuring element	900 Series (**up to 600 psi**)	Copper alloy C-Type Bourdon tube
	900 Series (**> 600 psi**)	Coiled safety tube
Connection	15-910, 15-901, 15-911	1/8" NPT, Brass
	20-901, 20-911, 25-900, 25-910, 25-901, 25-911	1/4" NPT or 7/16"-20 adjustable, Brass
	40-901, 40-911	1/4" NPT, Brass 1/2" NPT, Brass
Case	15-910, 25-900, 25-910	ABS with safety relief plug
	15-901, 15-911, 20-901, 20-911, 25-901, 25-911, 40-901, 40-911	304 Stainless Steel
Bezel	15-901, 15-911, 20-901, 20-911, 25-901, 25-911, 40-901, 40-911	304 Stainless Steel
Lens	15-910, 25-900, 25-910	Acrylic; ultrasonically welded to the case
	15-901, 15-911, 20-901, 20-911, 25-901, 25-911, 40-901	Polycarbonate
Pointer	15-901, 15-910, 15-911, 20-901, 20-911, 25-900, 25-910, 25-901, 25-911	Molded plastic
	40-901, 40-911	Balanced Aluminum, black finish
Dial	5-901, 15-910, 15-911, 20-901, 20-911, 25-900, 25-910, 25-901, 25-911	Molded plastic, white background with black primary scale & red secondary scale. UV resistant
	40-901, 40-911	Aluminum, white background with black primary scale & red secondary scale. UV resistant.
Movement	15-901, 15-910, 15-911, 20-901, 20-911, 25-900, 25-910, 25-901, 25-911	Brass and nylon with highly polished bearing surfaces
Fill liquid**	900 Series (all)	Glycerin

For details on accuracy/standard dial configuration and dial layouts, see pages 56-61.

* For every 18 °F (10 °C) shift in temperature from which the gauge is calibrated, the user can experience up to ±0.4% additional error.

**See page 58 for gauge fill options.

*** See Ordering Information.

⚠ **WARNING:** This product can expose you to chemicals including Lead and Nickel, which are known to the State of California to cause cancer and birth defects or other reproductive harm. For more information go to www.P65Warnings.ca.gov

ORDERING INFORMATION

GAUGE SIZES	**15**	1-1/2″ (6,000 psi max)	**20**	2″ (10,000 psi max)	**25**	2-1/2″	**40**	4″
CASE TYPES	**900**	ABS Case, bottom connection			**910**	ABS Case, back connection		
	901	SS Case, bottom connection			**911**	SS Case, back connection		
PRESSURE RANGES	**30vac**	-30 inHg to 0 psi	**100**	0 psi to 100 psi	**5000**	0 psi to 5,000 psi	**10**	0 bar to 10 bar††
	30/15	-30 inHg to 0 to 15 psi	**160**	0 psi to 160 psi	**6000**	0 psi to 6,000 psi	**16**	0 bar to 16 bar††
	30/30	-30 inHg to 0 to 30 psi	**200**	0 psi to 200 psi	**7500**	0 psi to 7,500 psi	**25**	0 bar to 25 bar††
	30/60	-30 inHg to 0 to 60 psi	**300**	0 psi to 300 psi	**10000**	0 psi to 10,000 psi	**40**	0 bar to 40 bar††
	30/100	-30 inHg to 0 to 100 psi	**400**	0 psi to 400 psi	**15000**	0 psi to 15,000 psi	**60**	0 bar to 60 bar††
	30/160	-30 inHg to 0 to 160 psi	**600**	0 psi to 600 psi	**−1**	−1 bar to 0 bar††	**100**	0 bar to 100 bar††
	30/200	-30 inHg to 0 to 200 psi	**800**	0 psi to 800 psi	**1**	0 bar to 1 bar††	**160**	0 bar to 160 bar††
	30/300	-30 inHg to 0 to 300 psi	**1000**	0 psi to 1,000 psi	**1.6**	0 bar to 1.6 bar††	**250**	0 bar to 250 bar††
	15	0 psi to 15 psi	**1500**	0 psi to 1,500 psi	**2.5**	0 bar to 2.5 bar††	**400**	0 bar to 400 bar††
	30	0 psi to 30 psi	**2000**	0 psi to 2,000 psi	**4**	0 bar to 4 bar††	**600**	0 bar to 600 bar††
	60	0 psi to 60 psi	**3000**	0 psi to 3,000 psi	**6**	0 bar to 6 bar††	**1000**	0 bar to 1,000 bar††
SCALE OPTIONS	**psi**	psi single scale	**psi/kg/cm²**	psi/kg/cm² dual scale	**bar/psi**	bar/psi dual scale	**psi/kPa**	psi/kPa dual scale
	psi/bar	psi/bar dual scale						
CONNECTION SIZES	**1/8**	1/8″ NPT	**1/4**	1/4″ NPT	**1/2**	1/2″ NPT	**SST**	SAE J1926-3:7/16-20 Adjustable *
OPTIONS	**PMC**	Steel Panel Mount Clamp	**SSCR**	304SS Cover Ring	**BLFF**	Black Front Flange***	**ST**	Stainless Steel Tagging
	SPMC	304SS Panel Mount Clamp	**MIP**	Maximum Indicating Pointer**	**SSFF**	304SS Front Flange†	**BP3**	Brass Press Fit Orifice 0.3 mm
	SSBU	Integral Stainless Steel Bezel & U-clamp	**SP**	Red Set Pointer	**SSRF**	304SS Rear Flange	**BT5**	Brass Threaded Orifice 0.5 mm
	SSB	Stainless Steel Bezel	**SG**	Safety Glass Lens	**LM**	Laser Marking	**BT8**	Brass Threaded Orifice 0.8 mm

Please consult your local NOSHOK Distributor or NOSHOK, Inc. for availability and delivery information.

NOTES: Refer to 900 Series Options & Accessories chart on page 53 for availability by series number.
Cleaning for Oxygen Service (O2) is available only for dry or HL filled gauges

* Includes FKM o-ring
** GY40 fill is standard for liquid filled gauges
*** Black Front Flange is only available for 25-910 gauges
† Stainless Steel Front Flange is not available for the 901 case type and all 1-1/2" gauges
† † Standard with G1/4 process connection

EXAMPLE

25 – 910 – 1000 – psi /kPa – 1/8††† – PMC

Gauge size ..... 2-1/2"
Case type ..... ABS case, liquid filled, back connection
Pressure range & scale option ..... 0 psi to 1,000 psi/kPa
Connection size† ..... 1/8" NPT
Option ..... Panel Mount Clamp

††† Only include in part number if non-standard connection size is ordered.

NOTES: See standard connection sizes chart on page 49.
Shaded portions of this part number example are not required unless a non-standard connection size or an option is needed.

15-901 1/8" NPT

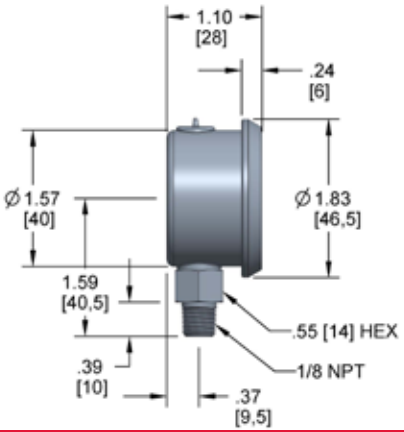

15-910 1/8" NPT

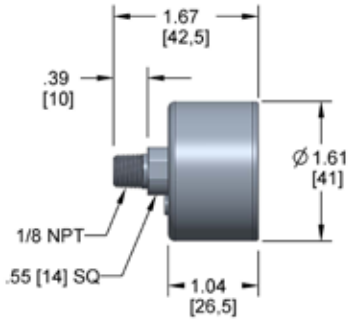

15-911 1/8" NPT

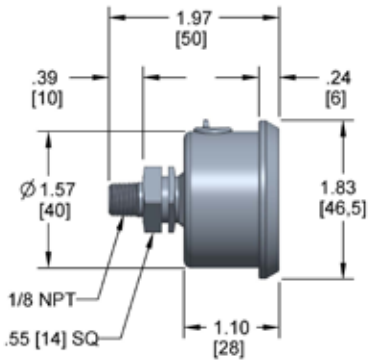

Dimensions

20-901 1/4" NPT

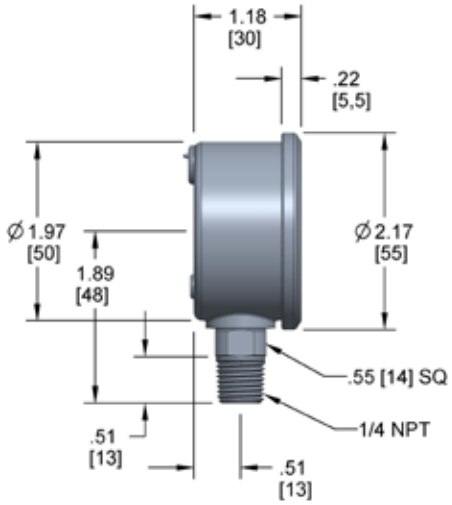

20-901 1/8" NPT

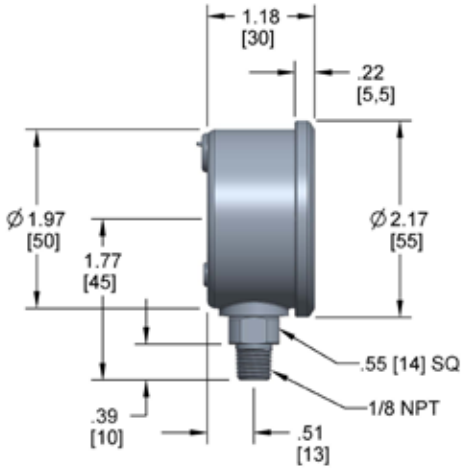

20-911 1/4" NPT

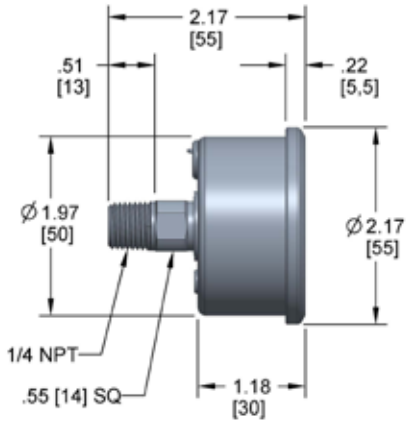

20-911 1/8" NPT

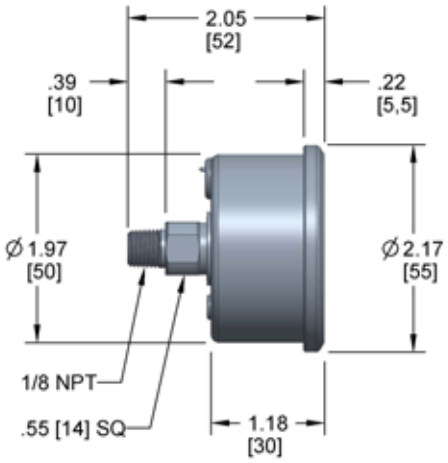

25-900 1/4" NPT

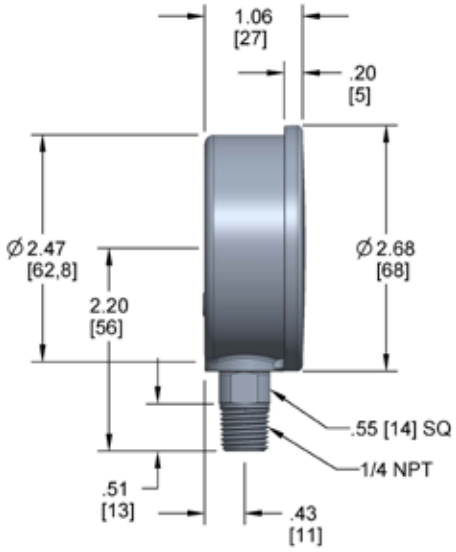

25-900 1/8" NPT

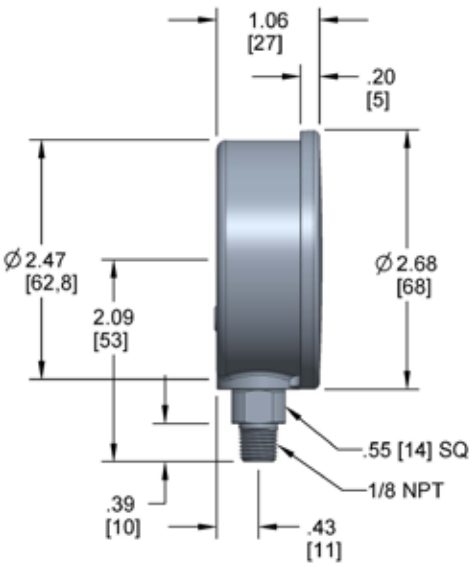

25-901 1/4" NPT

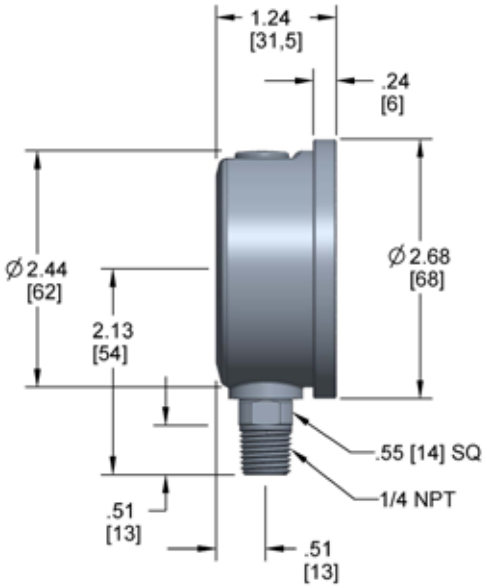

25-901 1/8" NPT

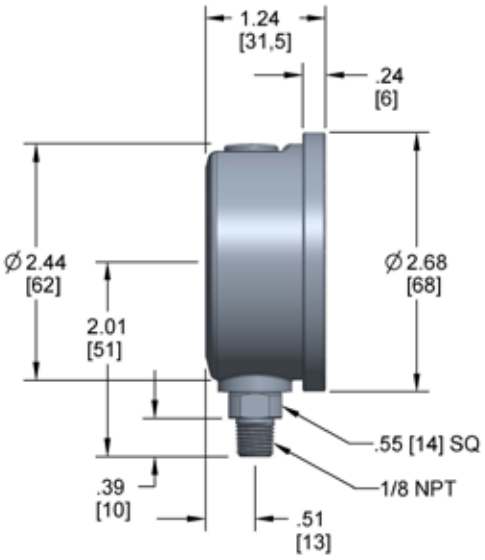

25-910 1/4" NPT

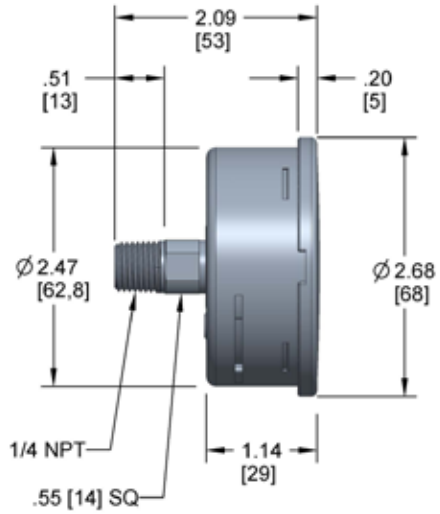

25-910 1/8" NPT

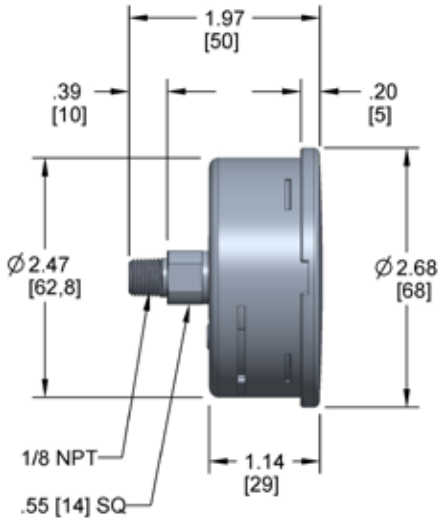

25-911 1/4" NPT

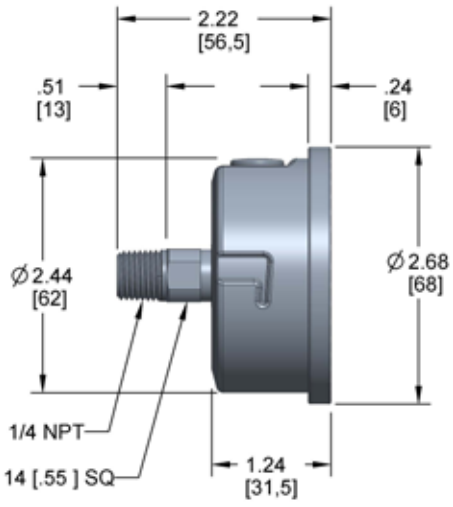

25-911 1/8" NPT

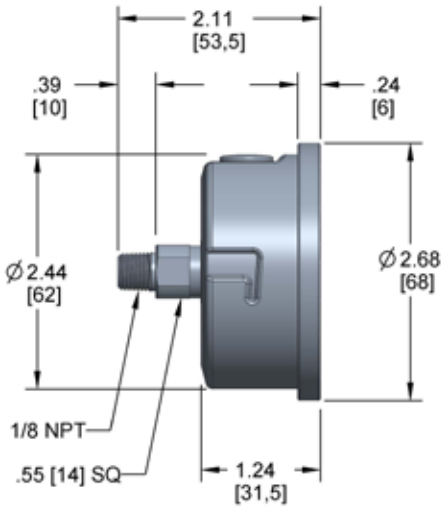

Dimensions

40-901 1/4" NPT

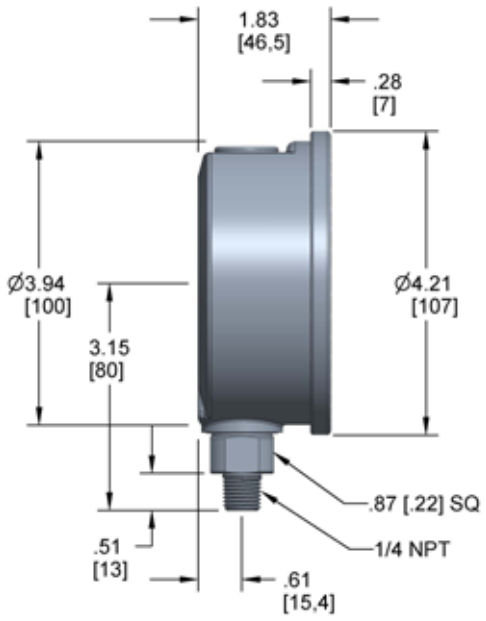

40-901 1/2" NPT

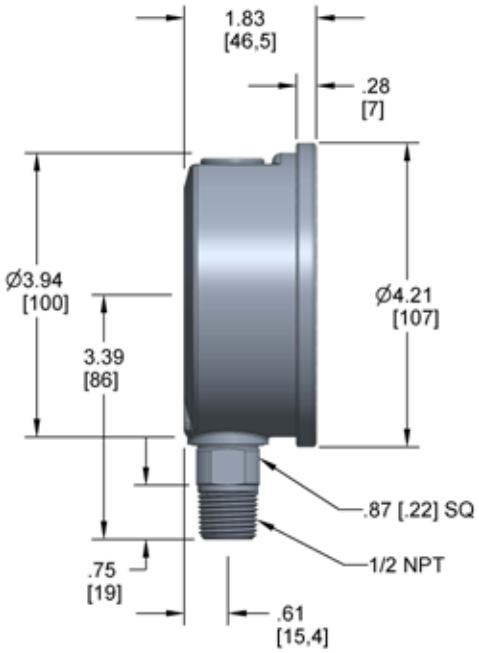

40-911 1/4" NPT

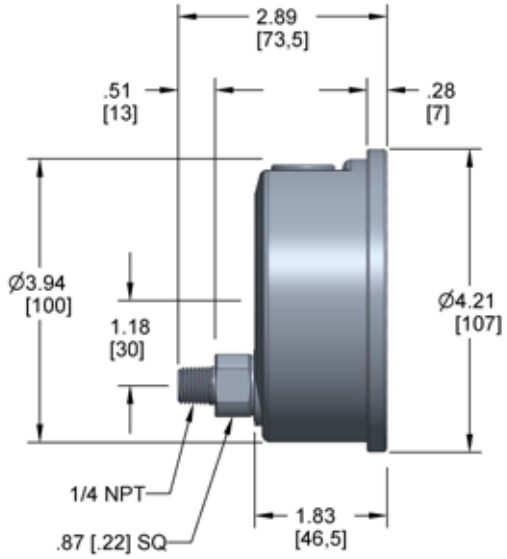

40-911 1/2" NPT

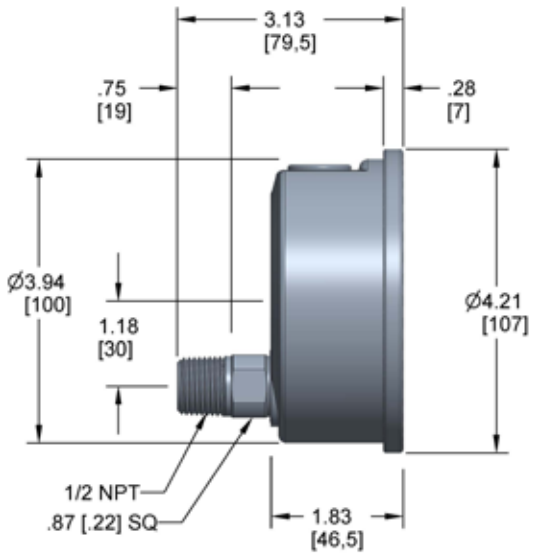

15-911 Panel Mount Clamp (PMC)

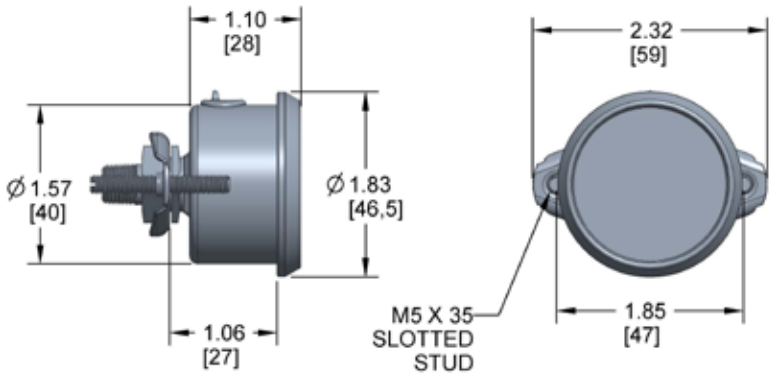

20-911 Panel Mount Clamp (PMC)

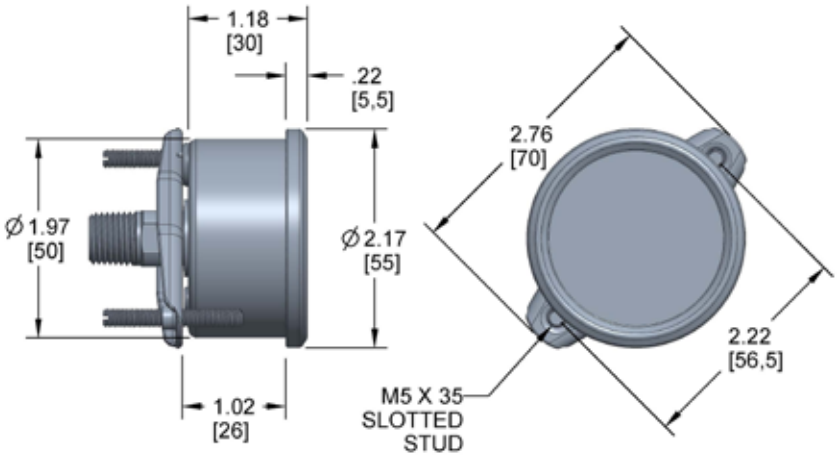

25-911 Panel Mount Clamp (PMC)

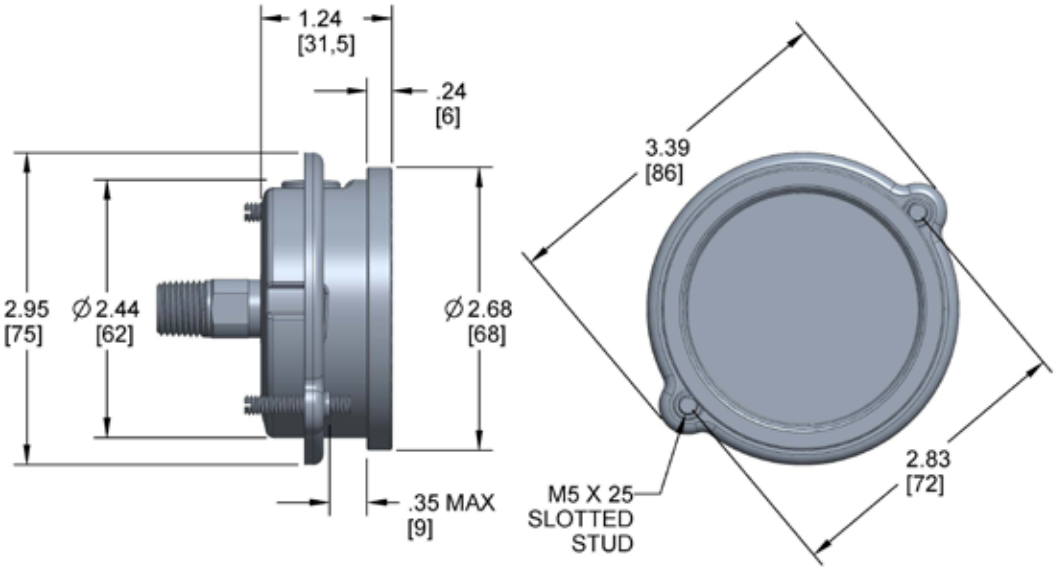

Dimensions

25-910 Black Front Flange (BLFF)

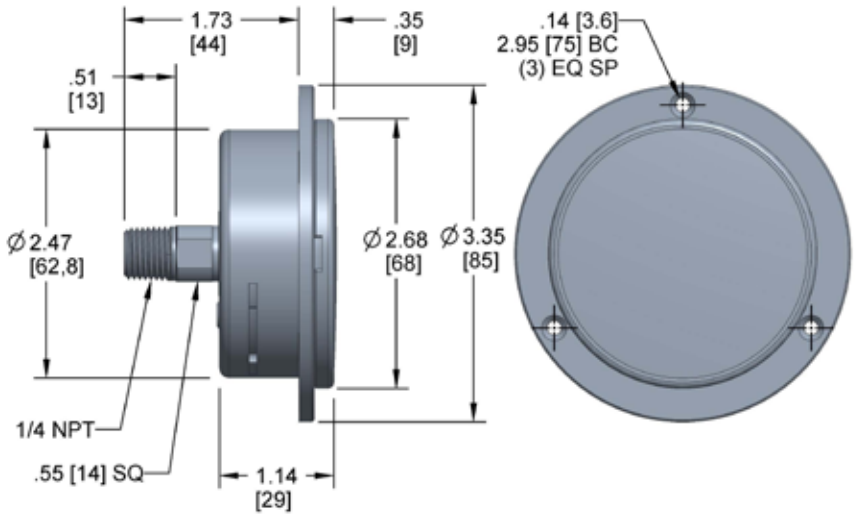

20-911 Front Flange (SSFF)

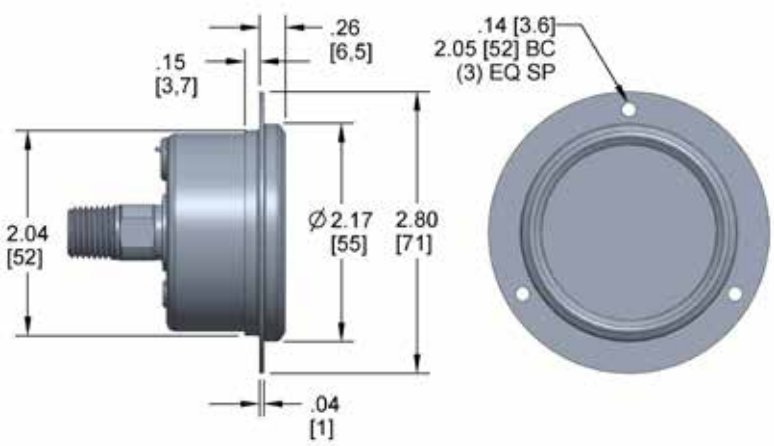

25-911 Front Flange (SSFF)

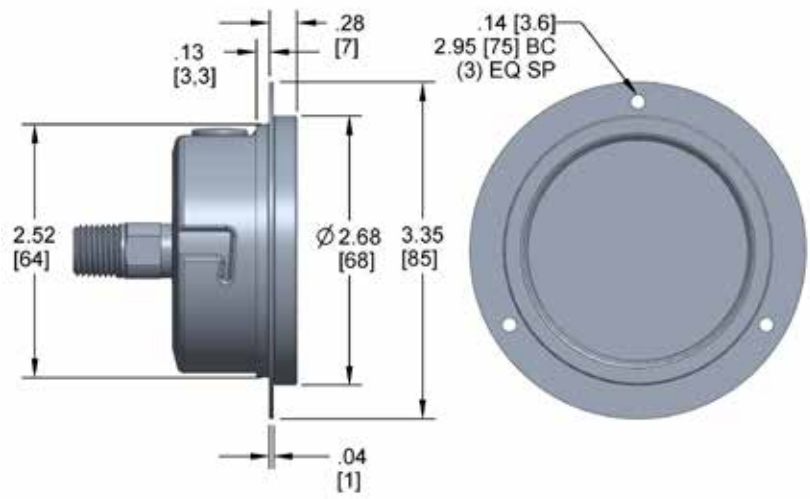

40-911 Front Flange (SSFF)

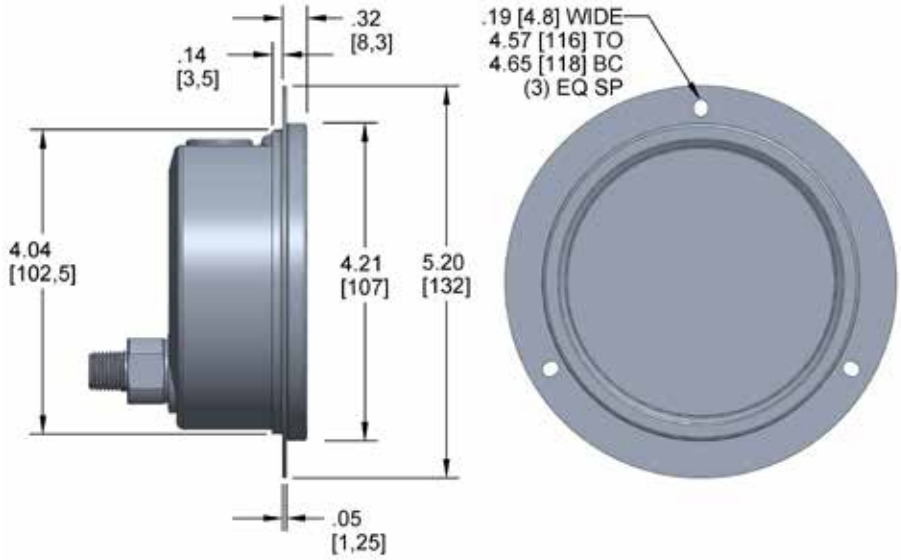

40-901 Rear Flange (SSRF)

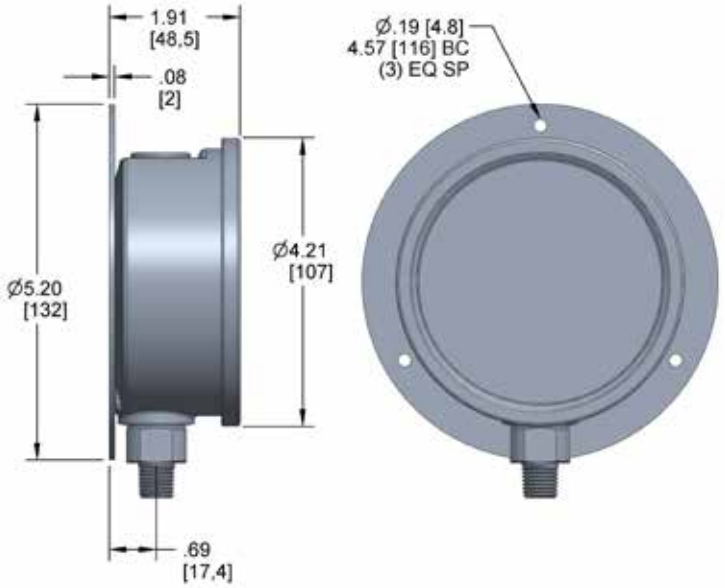

40-911 Rear Flange (SSRF)

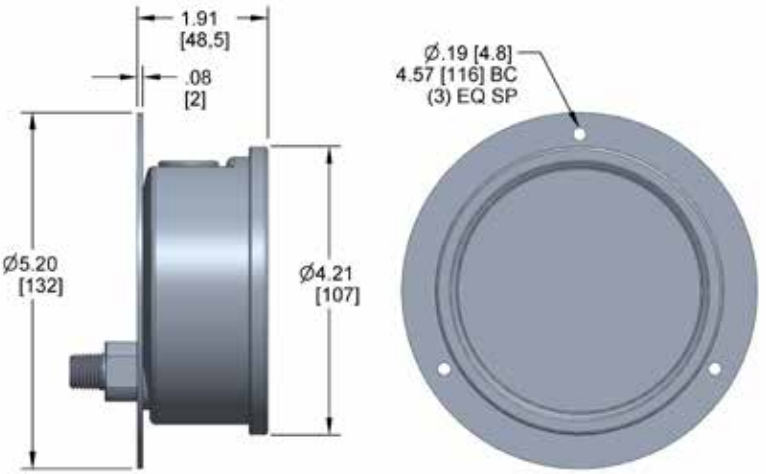

40-911 Integral Stainless Steel Bezel & U-clamp (SSBU)

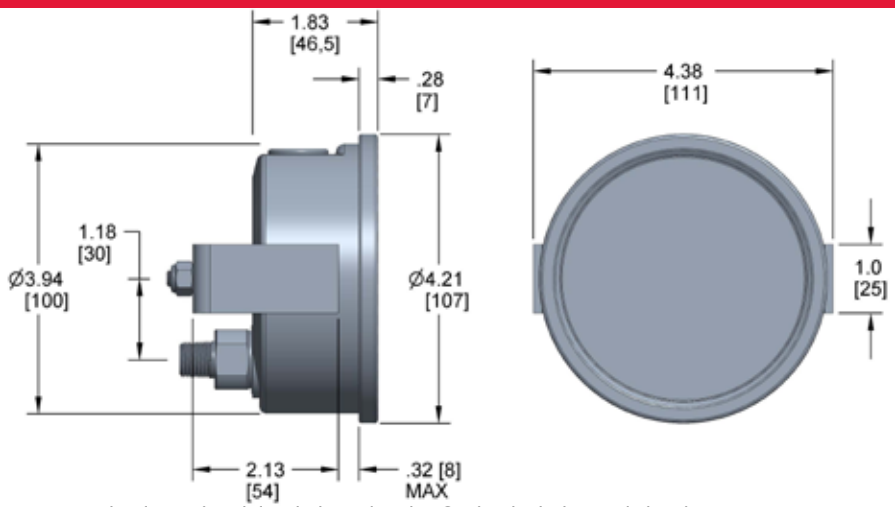

Dimensions

900 Series Process Connections

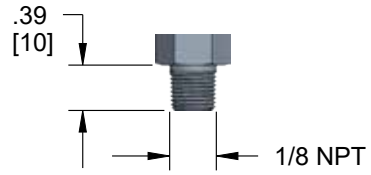

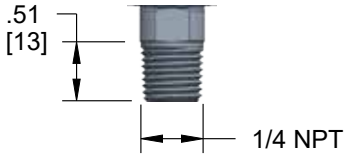

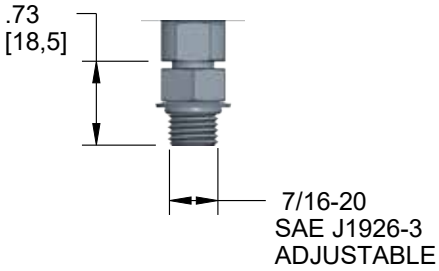

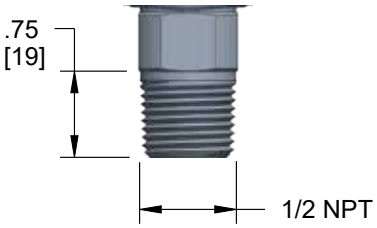



1000 SERIES

- Simple, rugged, compact differential pressure gauge
- Ranges from 0 psid to 5 psid through 0 psid to 110 psid
- 2-1/2", 4-1/2" and 6" gauge sizes
- Engineered plastic gauge case
- Clear anodized Aluminum and 316 Stainless Steel wetted parts

APPLICATIONS

- Heat exchangers
- Filter monitoring
- Flow indication
- Level indication

SPECIFICATIONS	
Pressure ranges	0 psid to 5 psid through 0 psid to 110 psid
Max. working static pressure	Aluminum 3,000 psig; Stainless Steel 6,000 psig
Accuracy	±3/2/3% of full scale on rising pressure
Temperature ranges (Including switch option)	Media -40 °F to 200 °F (-40 °C to 93 °C) Ambient -40 °F to 200 °F (-40 °C to 93 °C) Storage -40 °F to 200 °F (-40 °C to 93 °C)
Temperature ranges (4-20 mA transmitter option)	Ambient -20 °F to 150 °F (-29 °C to 66 °C)
Measuring element	316 Stainless Steel and ceramic piston/magnet
O-ring material	NBR
Connection	1/4" NPT female, back connection
Sensor housing material	Clear anodized Aluminum
Case	Engineered plastic
Bezel	Engineered plastic
Lens	Shatter-resistant acrylic
Pointer	Balanced Aluminum, black finish
Dial	Aluminum, white background with black scale
Movement	Magnetic
Optional switch rating	SPDT, 3W, 0.25 Amp, 125 Vac/Vdc (standard) (switch adjustable range of 15-95%). Other options available, consult factory.

⚠ **WARNING:** This product can expose you to chemicals including Lead and Nickel, which are known to the State of California to cause cancer and birth defects or other reproductive harm. For more information go to www.P65Warnings.ca.gov

ORDERING INFORMATION

GAUGE SIZES & SERIES	**25 - 10**	2-1/2″	**45 - 10**	4-1/2″	**60 - 10**	6″	
CONNECTION LOCATIONS	**0**	Bottom	**1**	Back	**2**	Side	
CONNECTION SIZE	**2**	1/4″ NPT female	**9**	7/16-20 female (Back only)			
PRESSURE RANGES *	**P5**	0 psid to 5 psid	**P20**	0 psid to 20 psid	**P50**	0 psid to 50 psid	**P100** 0 psid to 100 psid
	P10	0 psid to 10 psid	**P25**	0 psid to 25 psid	**P60**	0 psid to 60 psid	**P110** 0 psid to 110 psid
	P15	0 psid to 15 psid	**P30**	0 psid to 30 psid	**P75**	0 psid to 75 psid	
SENSOR HOUSING MATERIALS	**A**	Aluminum (3,000 max working pressure)			**S**	316L Stainless Steel (6,000 max working pressure)	
O-RING MATERIALS	**1**	PTFE	**3**	NBR			
	2	FKM	**4**	EPDM			
CASE MATERIALS	**A**	Aluminum (4-1/2" only)	**P**	Engineered plastic			
LENSES	**1**	Shatter-resistant acrylic	**2**	Safety glass **	**3**	Maximum indicating pointer (MIP) ***	
FILL FLUID (optional)	**GY**	Glycerin	**SL**	Silicone †			
SWITCH OR TRANSMITTER TYPE & HOUSING	**1**	Single switch, flying leads with grommet wire seal			**5**	Single switch with Hirschman electrical connection	
	2	Dual switch, flying leads with grommet wire seal			**6**	Dual switch with Hirschman electrical connection	
	3	Single switch, flying leads with 1/4" female NPT, NEMA 4X			**7**	4-20 mA transmitter in NEMA 4x IP65 plastic enclosure with terminal strip (1/2" female NPT conduit connection)	
	4	Dual switch, flying leads with 1/4" female NPT, NEMA 4X					
OPTIONS	**MH**	(2) 1/4-20 Mounting Holes			**RP**	Reversed Ports	
	MK5-CS	Pipe Mounting Kit, Steel			**ST**	Stainless Steel Tagging	
	MK5-SS	Pipe Mounting Kit, Stainless Steel			**WMK**	Wall Mounting Kit	

Please consult your local NOSHOK Distributor or NOSHOK, Inc. for availability and delivery information.

* Other ranges and scales available on request.
** Only available with dry, 4-1/2" gauge size with Aluminum case.
*** Available with dry gauge only, 2-1/2" and 4-1/2" gauge sizes only.
† Optional Silicone filling available with 2-1/2" and 6" gauge case sizes, and 4-1/2" gauge case size with Aluminum case and standard shatter-resistant acrylic lens only.

EXAMPLE **25-10 1 2 – P5 – A 2 P – 1**

Gauge size & series ..... 2-1/2" 1000 Series
Connection location ..... Back
Connection size ..... 1/4" NPT female
Pressure range ..... 0 psid to 5 psid
Sensor housing material ..... Aluminum, clear
O-ring material ..... FKM
Case material ..... Engineered plastic
Lens ..... Shatter-resistant acrylic

Dimensions

2-1/2″ Gauge

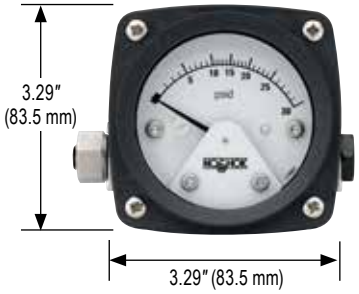

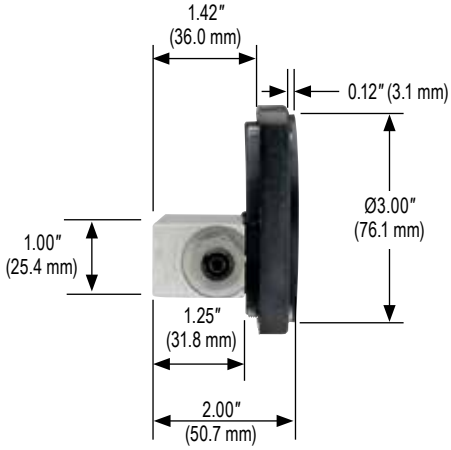



4-1/2″ Gauge

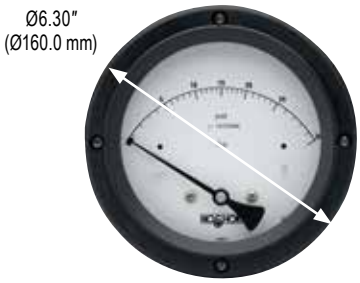

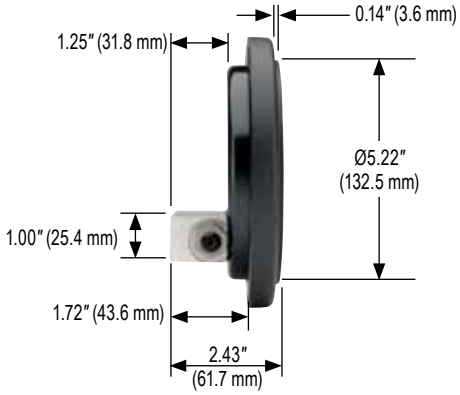

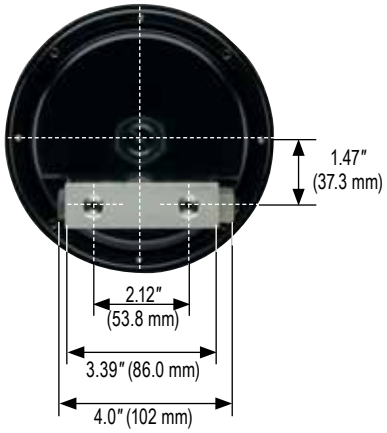

6″ Gauge

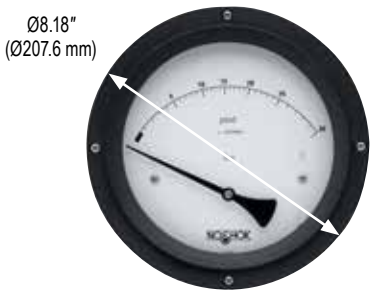

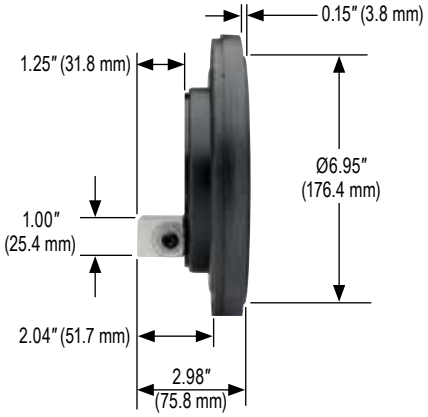

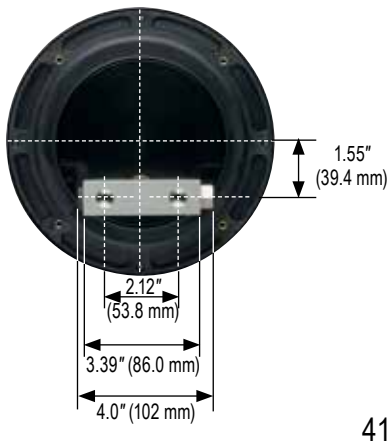

Single switch, flying leads with grommet wire seal



Dual switch, flying leads with grommet wire seal



Single switch, flying leads with 1/4" female NPT, NEMA 4X

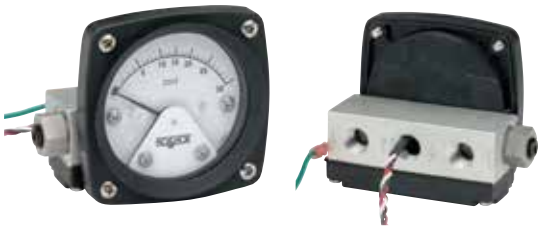

Dual switch, flying leads with 1/4" female NPT, NEMA 4X



Single switch with Hirschman electrical connection



Dual switch with Hirschman electrical connection



4-20 mA transmitter in NEMA 4x IP65 plastic enclosure with terminal strip (1/2" female NPT conduit connection)



Diaphragm Type CE

NOSHOK



1100 SERIES

- Simple, rugged, compact differential pressure gauge
- Ranges from 0 inH_2O to 20 inH_2O through 0 psid to 100 psid
- 2-1/2", 4-1/2" and 6" gauge sizes
- Engineered plastic gauge case
- Black anodized Aluminum housing, 316 Stainless Steel optional

APPLICATIONS

- Heat exchangers
- Filter monitoring
- Flow indication
- Level indication

SPECIFICATIONS	
Pressure ranges	0 inH_2O to 20 inH_2O through 0 psid to 100 psid
Max. working static pressure	Aluminum & Stainless Steel 3,000 psig; Brass 1,500 psig
Accuracy	±3/2/3% of full scale on rising pressure
Temperature ranges (Including switch option)	Media -40 °F to 200 °F (-40 °C to 93 °C) Ambient -40 °F to 200 °F (-40 °C to 93 °C) Storage -40 °F to 200 °F (-40 °C to 93 °C)
Temperature ranges (4-20 mA transmitter option)	Ambient -20 °F to 150 °F (-29 °C to 66 °C)
Measuring element	316 Stainless Steel, PTFE and ceramic magnet
O-ring & diaphragm material	NBR
Connection	1/4" NPT female, back connection
Sensor housing material	Black anodized Aluminum
Case	Engineered plastic
Bezel	Engineered plastic
Lens	Shatter-resistant acrylic
Pointer	Balanced Aluminum, black finish
Dial	Aluminum, white background with black scale
Movement	Magnetic
Optional switch rating	SPDT, 3W, 0.25 Amp, 125 Vac/Vdc (standard) (switch adjustable range of 15-95%). Other options available, consult factory.

⚠ **WARNING:** This product can expose you to chemicals including Lead and Nickel, which are known to the State of California to cause cancer and birth defects or other reproductive harm. For more information go to www.P65Warnings.ca.gov

ORDERING INFORMATION

GAUGE SIZES & SERIES	**25 - 11**	2-1/2″	**45 - 11**	4-1/2″	**60 - 11**	6″	
CONNECTION LOCATIONS	**0**	Dual top & bottom ***	**1**	Back	**2**	Side	**3** Bottom
CONNECTION SIZE	**2**	1/4″ NPT female	**9**	7/16-20 female (Back or side only)			
PRESSURE RANGES*	**W20**	0 inH_2O to 20 inH_2O	**W75**	0 inH_2O to 75 inH_2O	**W400**	0 inH_2O to 400 inH_2O	**P30** 0 psid to 30 psid
	W25	0 inH_2O to 25 inH_2O	**W100**	0 inH_2O to 100 inH_2O	**P5**	0 psid to 5 psid	**P50** 0 psid to 50 psid
	W30	0 inH_2O to 30 inH_2O	**W135**	0 inH_2O to 135 inH_2O	**P10**	0 psid to 10 psid	**P60** 0 psid to 60 psid
	W40	0 inH_2O to 40 inH_2O	**W150**	0 inH_2O to 150 inH_2O	**P15**	0 psid to 15 psid	**P75** 0 psid to 75 psid
	W50	0 inH_2O to 50 inH_2O	**W200**	0 inH_2O to 200 inH_2O	**P20**	0 psid to 20 psid	**P100** 0 psid to 100 psid
	W60	0 inH_2O to 60 inH_2O	**W300**	0 inH_2O to 300 inH_2O	**P25**	0 psid to 25 psid	
SENSOR HOUSING MATERIALS	**A**	Aluminum, black	**B**	Brass	**S**	316L Stainless Steel	
O-RING & DIAPHRAGM MATERIALS	**2**	FKM	**3**	NBR	**4**	EPDM	
CASE MATERIAL	**A**	Aluminum (4-1/2" only)	**P**	Engineered plastic			
LENSES	**1**	Shatter-resistant acrylic	**2**	Safety glass**	**3**	Maximum indicating pointer (MIP) †	
FILL FLUIDS (optional)	**GY**	Glycerin	**SL**	Silicone ††			
SWITCH OR TRANSMITTER TYPE & HOUSING (OPTIONAL)	**3**	Single switch, NEMA 4X			**7**	4-20 mA transmitter in NEMA 4x IP65 plastic enclosure with terminal strip (1/2" female NPT conduit connection).	
	4	Dual switch, NEMA 4X					
OPTIONS	**MH**	(2) 1/4-20 Mounting Holes			**RP**	Reversed Ports	
	MK5-CS	Pipe Mounting Kit, Steel			**ST**	Stainless Steel Tagging	
	MK5-SS	Pipe Mounting Kit, Stainless Steel			**WMK**	Wall Mounting Kit	

Please consult your local NOSHOK Distributor or NOSHOK, Inc. for availability and delivery information.

* Other ranges and scales available on request.
** Only available with dry, 4-1/2" gauge size with Aluminum case.
*** Not available with switch or transmitter option.
† Available with dry gauge only, 2-1/2" and 4-1/2" gauge sizes only.
†† Optional Silicone filling available with 2-1/2" and 6" gauge case sizes, and 4-1/2" gauge case size with Aluminum case and standard shatter-resistant acrylic lens only.

EXAMPLE

25-11 1 2 – P75 – A 2 P – 1

Gauge size & series ..... 2-1/2" 1100 Series
Connection location ..... Back
Connection size ..... 1/4" NPT female
Pressure range ..... 0 psid to 75 psid
Sensor housing material ..... Aluminum, black
O-ring material ..... FKM
Case material ..... Engineered plastic
Lens ..... Shatter-resistant acrylic

Dimensions

2-1/2″ Gauge (<25 psid)

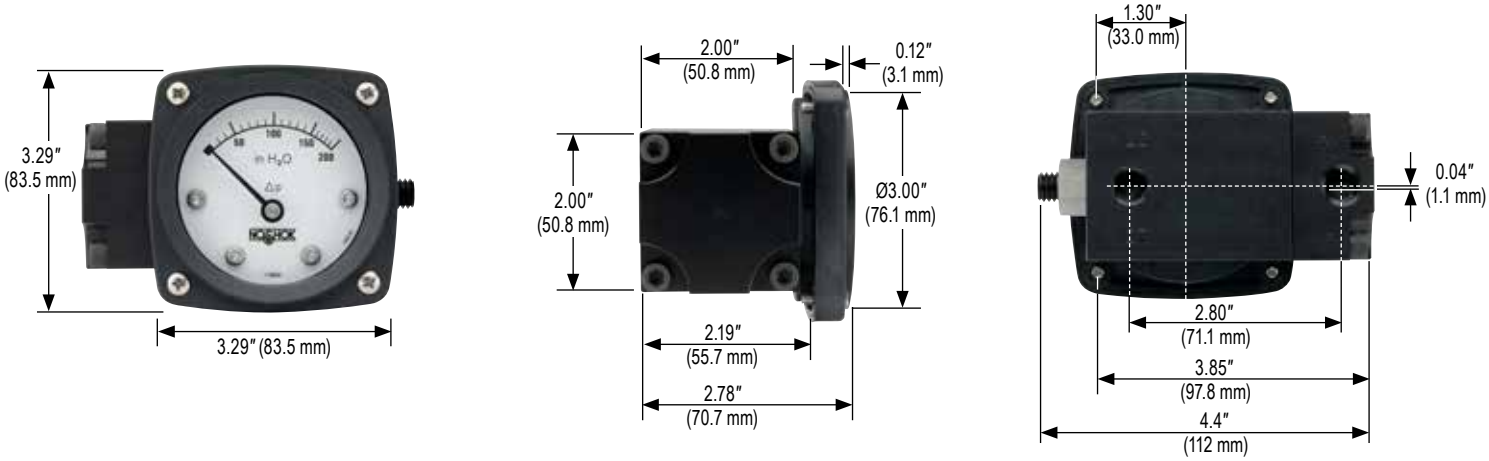

4-1/2″ Gauge (<25 psid)

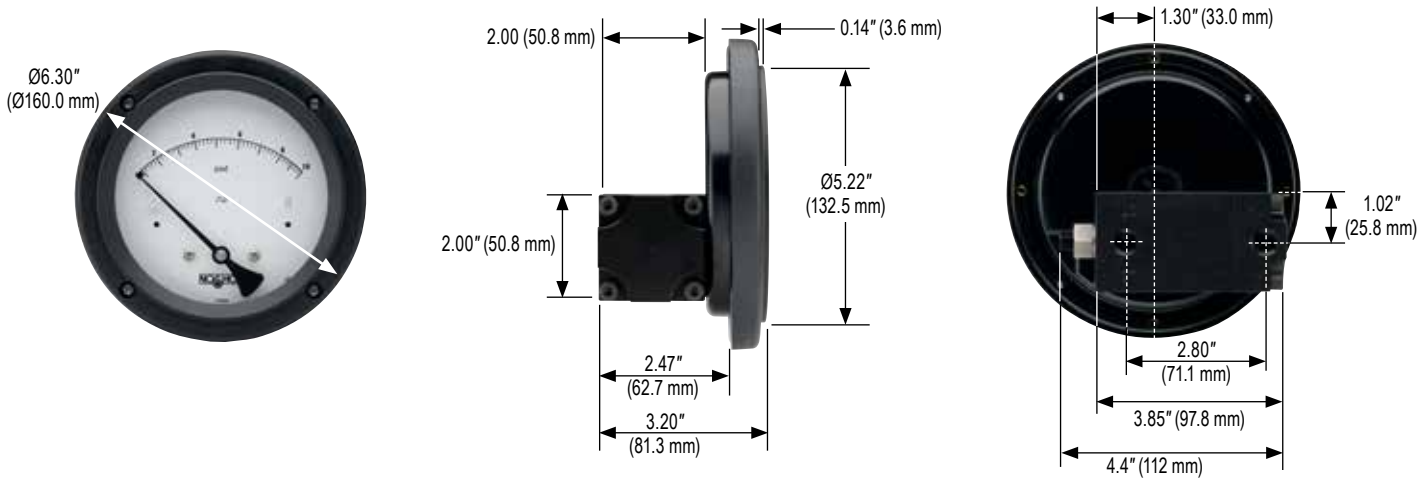

6″ Gauge (<25 psid)



2-1/2″ Gauge (≥25 psid)

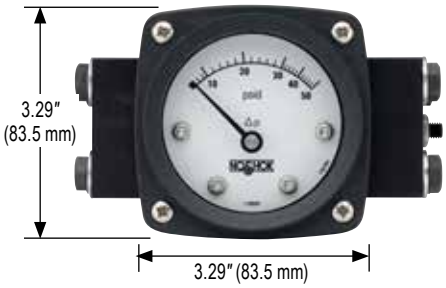

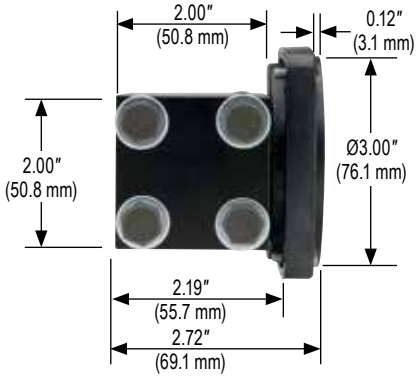

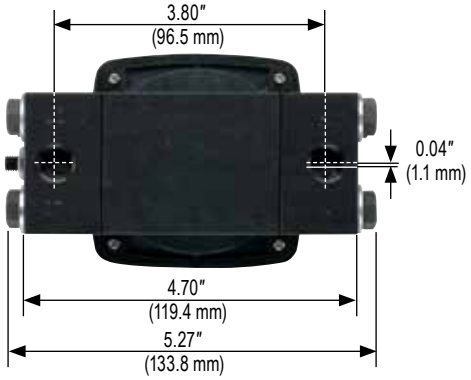

4-1/2″ Gauge (≥25 psid)



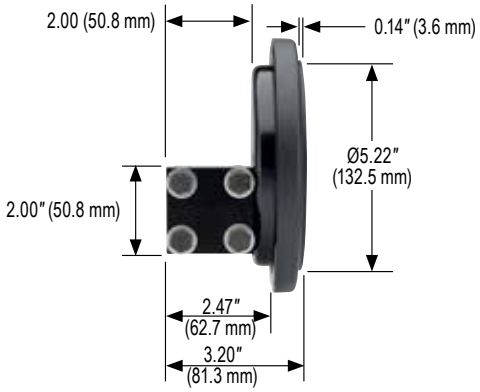



6″ Gauge (≥25 psid)



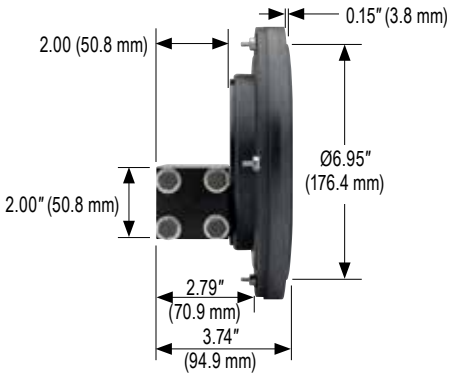



4-20 mA Transmitter in NEMA 4x Enclosure





Single Switch in NEMA 4x Enclosure







10 SERIES

- 3/4" clamp, dry gauge
- Ranges from 0 psig to 30 psig through 0 psig to 600 psig
- 2" gauge size
- Electropolished Stainless Steel case
- 316 Stainless Steel wetted parts
- Meets the requirements of 3-A
- C.I.P, S.I.P and Autoclave (only dry gauges are recommended for Autoclave)

APPLICATIONS

- Food & beverage processing
- Pasteurization systems
- Pharmaceutical
- Medical

SPECIFICATIONS

Pressure ranges	0 psig to 30 psig through 0 psig to 600 psig
Accuracy	±2.5% full scale
Temperature ranges	Media -40 °F to 300 °F (-40 °C to 150 °C) Ambient 25 °F to 140 °F (-4 °C to 60 °C) Storage 25 °F to 140 °F (-4 °C to 60 °C)
Measuring element	316 Stainless Steel Bourdon tube
Connection	3/4″ Sanitary Clamp, 316L Stainless Steel Diaphragm 316L Stainless Steel, electropolished to 32 µin Ra or better
Case	2″ Electropolished 304 Stainless Steel
Lens*	Polycarbonate
Pointer	Balanced Aluminum, black finish
Dial	Aluminum, white background, black print
Movement	Stainless Steel
Fill liquid	Glycerin, USP Grade

***Note:** Autoclave requires the addition of optional laminated safety glass lens

Diaphragm seal must be installed facing downward or in a vertical position for drainability.
Do not install diaphragm seal facing in an upward position.

WARNING: This product can expose you to chemicals including Nickel, which are known to the State of California to cause cancer and birth defects or other reproductive harm. For more information go to www.P65Warnings.ca.gov

ORDERING INFORMATION					
SERIES	**100**	10 Series fractional			
CLAMP SIZE	**06**	3/4″			
FILL LIQUID	**1**	Glycerin	**Other food grade quality fill fluids available – please consult factory**		
GAUGE SIZE	**20**	2″			
PRESSURE RANGES	**43**	0 psig to 30 psig	**55**	0 psig to 160 psig	**64** 0 psig to 400 psig
	46	0 psig to 60 psig	**58**	0 psig to 200 psig	**70** 0 psig to 600 psig
	49	0 psig to 100 psig	**61**	0 psig to 300 psig	
OPTIONS	**0**	None	**3**	Safety Glass Lens (Required for Autoclave applications)	

Please consult your local NOSHOK Distributor or NOSHOK, Inc. for availability and delivery information.

EXAMPLE **100 – 06 – 1 – 20 – 43 – 3**

Series ..... 10 Series fractional
Clamp size..... 3/4" Sanitary
Fill liquid .....Glycerin (USP food grade)
Gauge size .....2"
Pressure range .....0 psig to 30 psig
Option.....Safety Glass Lens

2″ Gauge with 3/4″ ASME-BPE Sanitary Clamp Connection



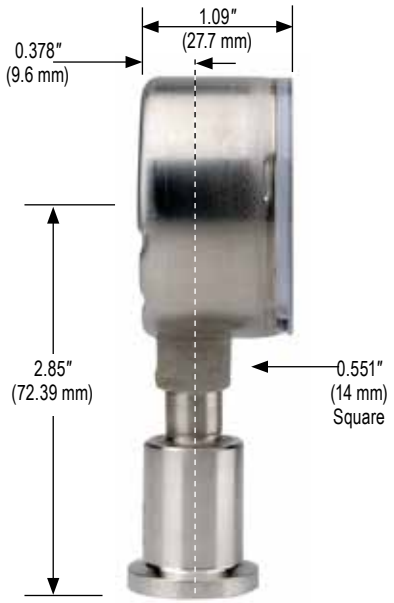



10 SERIES

- 1-1/2" and 2" clamp, fillable dry or liquid-filled gauge
- Ranges from -30 inHg to 0 psig through 0 psig to 600 psig
- 2-1/2" and 4" gauge sizes
- Electropolished Stainless Steel case
- 316 Stainless Steel wetted parts
- Meets the requirements of 3-A
- C.I.P, S.I.P and Autoclave (only dry gauges are recommended for Autoclave)

APPLICATIONS

- Food & beverage processing
- Pasteurization systems
- Pharmaceutical
- Medical

SPECIFICATIONS

Pressure ranges	-30 inHg to 0 psig through 0 to 600 psig
Accuracy	2-1/2″ gauge ±1.6% full scale 4″ gauge ±1.0% full scale
Temperature ranges	Media -40 °F to 300 °F (-40 °C to 150 °C) Ambient 25 °F to 140 °F (-4 °C to 60 °C) Storage 25 °F to 140 °F (-4 °C to 60 °C)
Measuring element	316 Stainless Steel "C" tube
Connection	1-1/2″ or 2″ ASME-BPE Sanitary Clamp, 316L Stainless Steel Diaphragm 316L Stainless Steel, electropolished to 32 µin Ra or better
Case	Electropolished 304 Stainless Steel
Bayonet ring	Electropolished 304 Stainless Steel
Lens	Safety glass
Pointer	Balanced Aluminum, black finish
Dial	Aluminum, white background, black print
Movement	Stainless Steel
Fill liquid	Glycerin, USP Grade

***Note:** Autoclave requires the addition of optional laminated safety glass lens

Diaphragm seal must be installed facing downward or in a vertical position for drainability.
Do not install diaphragm seal facing in an upward position.

⚠ **WARNING:** This product can expose you to chemicals including Nickel, which are known to the State of California to cause cancer and birth defects or other reproductive harm. For more information go to www.P65Warnings.ca.gov.

ORDERING INFORMATION							
SERIES	**100**	10 Series heavy-duty, bottom connected			**101**	10 Series heavy-duty, back connected	
CLAMP SIZES	**12**	1-1/2"	**16**	2"			
FILL LIQUID	**1**	Glycerin	**Other food grade quality fill fluids available – please consult factory**				
GAUGE SIZES	**25**	2-1/2"	**40**	4"			
PRESSURE RANGES	**01**	-30 inHg to 0 psig *	**16**	-30 inHg to 160 psig	**46**	0 psig to 60 psig	**64** 0 psig to 400 psig
	04	-30 inHg to 15 psig	**19**	-30 inHg to 200 psig	**49**	0 psig to 100 psig	**70** 0 psig to 600 psig
	07	-30 inHg to 30 psig	**22**	-30 inHg to 300 psig	**55**	0 psig to 160 psig	
	10	-30 inHg to 60 psig	**40**	0 psig to 15 psig *	**58**	0 psig to 200 psig	
	13	-30 inHg to 100 psig	**43**	0 psig to 30 psig	**61**	0 psig to 300 psig	
GAUGE FILLS	**0**	None	**1**	Glycerin	**2**	Silicone	**3** Mineral oil
		(All food grade quality fill fluids)					
GAUGE OPTIONS	**0**	None	**1**	Max. Indicating Pointer**	**2**	Adjustable Pointer **	

Please consult your local NOSHOK Distributor or NOSHOK, Inc. for availability and delivery information.

* Not available on 4" gauge and 1-1/2" ASME-BPE Sanitary Clamp
** Not available on 2-1/2" gauge

EXAMPLE **100 – 12 – 1 – 25 – 55 – 1**

Series ..... 10 Series heavy-duty
Clamp size ..... 1-1/2" ASME-BPE Sanitary
Fill liquid ..... Glycerin (USP food grade)
Gauge size ..... 2-1/2"
Pressure range ..... 0 psig to 160 psig
Gauge fill ..... Glycerin

4" Gauge with 2" ASME-BPE Sanitary Clamp Connection

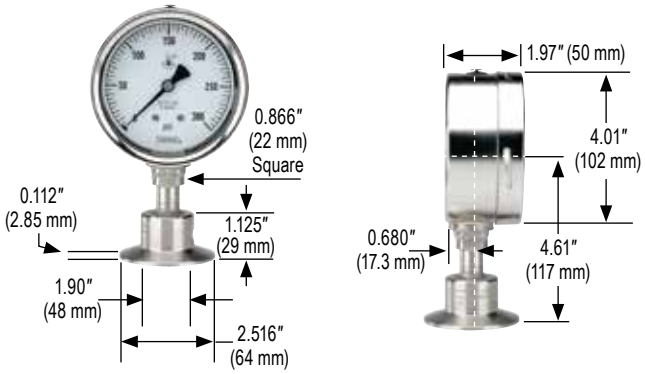

4" Gauge with 1-1/2" ASME-BPE Sanitary Clamp Connection

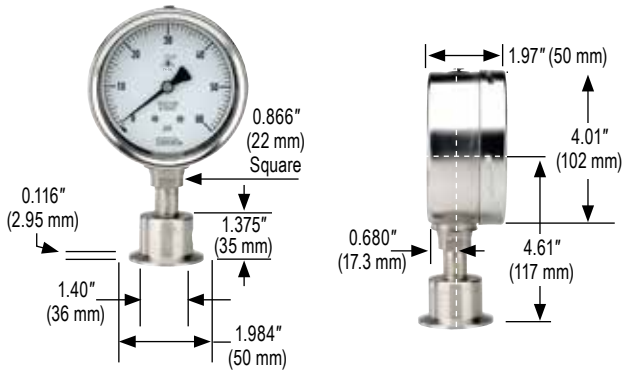

2-1/2" Gauge with 2" ASME-BPE Sanitary Clamp Connection

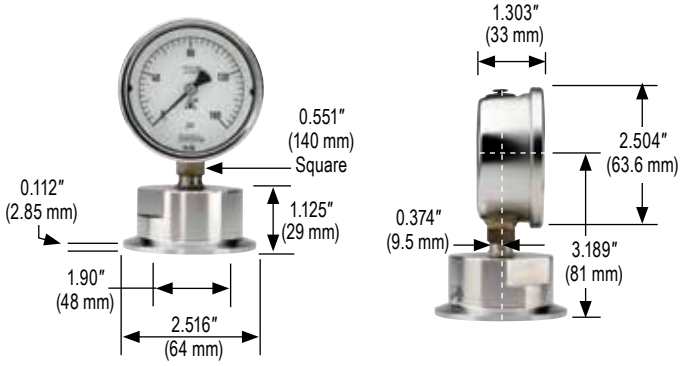

2-1/2" Gauge with 1-1/2" ASME-BPE Sanitary Clamp Connection

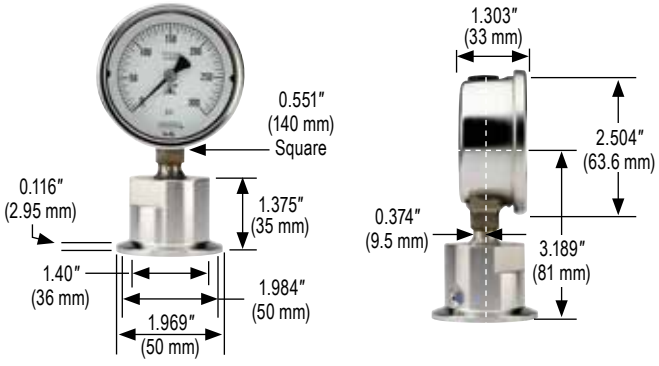

Dial Indicating Gauge Options & Accessories

NOSHOK

PANEL MOUNTING FLANGES

- Many panel mounting options are available and can be installed in the field
- Options include:
  - Brass Front Flanges (BFF)
  - Black Painted Steel Front Flanges (BLFF)
  - Chrome Front Flanges (CFF)
  - Stainless Steel Front Flanges (SSFF)
  - Chrome Triangular Bezel with U-Clamp (CBU)
  - Black Painted Steel Triangular Bezels with U-Clamp (BBU-Clamp)
  - Stainless Steel Narrow Bezel Front Flanges (SSBU)
  - Panel Mount Clamps (PMC)
- Chrome-plated Steel Adapter Rings (AR) are available in conjunction with several of these flanges to adapt to oversized panel cut outs, including:
  - Stainless Steel Flange Rings (SSFR)
  - Chrome-Plated Steel Flange Rings (CFR)
  - Black or Chrome Panel Mount Rings (BPMR & CPMR)
- Rear Flanges (RF) for front of panel mounting are also available as a factory installed option on some series



Panel Mount Clamp
20-110 PMC



Chrome Triangular Bezel
with U-Clamp

CASES & COVER RINGS

- The following cases and cover rings are available on many NOSHOK gauges as production options:
  - Black painted Steel (BCR)
  - Chrome-plated Steel (CCR)
  - 304 Stainless Steel (SSCR)
- Some NOSHOK gauges are also available with a solid front, safety case

LENSES

- A variety of lens options are available on many NOSHOK gauges as a production option:
  - Instrument glass lenses
  - Laminated safety glass lenses
  - Acrylic lenses
  - Homalite lenses (resistant to many industrial solvents)
  - A Steel or Stainless case and cover ring may be required when other than acrylic lenses are utilized



Cases and Cover Rings

MAXIMUM INDICATING POINTERS (MIP)

- An invaluable tool for identifying pressure spikes in a system
- Extremely helpful during system start up and troubleshooting
- MIPs add an additional ±1% error to the gauge because of the increased load on the Bourdon tube
- On ranges of 60 psi and lower, MIPs may double the allowed error of the gauge



Maximum Indicating Pointer

See the Gauges Accessories & Options Charts on pgs. 50-53 for availability on specific gauges

NOSHOK

SET POINTERS (SP)
- Used to identify an operating minimum or maximum pressure or vacuum value
- Set pointers are available on many NOSHOK gauges



Set Pointers

RUBBER CASE PROTECTORS (RCP)
- Ideal for gauges that are subjected to direct physical shock
- 2-1/2″ covers are blue and 4″ covers are black



Rubber Case Protectors

ORIFICES
- Press-fit or threaded orifices in Brass or 316 Stainless Steel are available on all NOSHOK pressure gauges
- Available with I.D.'s from 0.004″ to 0.032″ depending on the specific NOSHOK gauge
- Used in a gauge to restrict the flow of rapidly increasing and decreasing pressures, reducing the immediate effect of pulsations and pressure spikes
- Recommended for all dynamic applications

RECALIBRATORS & ADJUSTABLE POINTERS
- This option gives the user the capability of resetting the pointer by an adjustment screw accessible through the dial, or by a gear located on the pointer

OVERPRESSURE PROTECTION
- Overpressure protection of 3 times up to 10 times of the dial range is available on some NOSHOK gauges as a production option

AMMONIA REFRIGERATION GAUGES
- Ammonia and refrigeration gauges with dials reading in both pressure and temperature are available in 400/500 Series 2-1/2″ and 4″ sizes
- Refrigeration gauges with dials reading in pressure and temperature are available in 300, 400 and 500 Series for R-12 and R-22



Ammonia Gauges

LIQUID FILLING OPTIONS
- Many NOSHOK gauges are available with liquid filling options
- Standard fill is Glycerin
- Optional fill liquids include Dow Corning 200® Silicone and Halocarbon®

SPECIAL CONNECTIONS
- Available on most NOSHOK gauges
- Some examples include:
  - Metric threads
  - Female threads
  - Straight threads (flare or swivel type)
  - Special o-ring connections
- Please contact us with your requirements for prices, availability and minimum quantities

REID VAPOR TEST GAUGES
- Configuration includes a handle, special dial and special pressure port
- Available in 600/700 Series gauges with pressure ranges of 0 to 5 psi, 0 to 15 psi and 0 to 30 psi

See the Gauges Accessories & Options Charts on pgs. 50-53 for availability on specific gauges

Dial Indicating Gauge Options & Accessories

METRIC DIALS & CUSTOMIZED SPECIAL DIALS

- Dual scale metric dials in psi/bar, psi/kPa and psi/kg/cm^2 are available on many NOSHOK gauges
- Other scales are available for specific sizes and ranges, such as single scale bar and kPa, refrigerant scales and altitude scales
- Please consult the factory for availability
- Customized special dials such as non-standard metric scale, tons of ram, lbs. of force, etc. are available in small quantities (as few as one piece) on some NOSHOK gauges



Metric Dials and
Customized Special Dials

CERTIFIED CALIBRATION

- Available on all NOSHOK gauges
- Certified calibration provides the user with a serial numbered gauge along with a calibration sheet against a primary pressure standard
- Traceable to the National Institute of Standards and Technology

MAGNETIC SPRING CONTACT SWITCH (MSCS)

- An excellent choice when an accurate pressure switch is required in addition to a reliable pressure gauge
- Fully adjustable by the user
- These switches are actuated by the pressure gauge pointer to provide accurate field adjustment
- A removable adjustment key makes them tamper-proof
- They operate with an extremely broad power supply, AC or DC up to 250V max. (30W 50 VA), allowing them to be used virtually anywhere in the world in addition to very remote applications with only DC battery pack power available
- Standard units consist of (2) two magnetic spring switches; either one or both switches may be used:
  - Switch (1) one is normally closed
  - Switch (2) two is normally open with operation referenced on clockwise pointer motion
- Magnetic spring contact switches are available as a factory installed option on 40-400 Series and 40-410 Series
- The lowest full scale pressure range this switch may be used on is 0 psi to 60 psi because of the increased load on the pointer and Bourdon tube
- A mating 4-pin connector with 5′ of 4-wire and color coded shielded cable is standard



40-400 Series Gauge with
Magnetic Spring Contact Switch

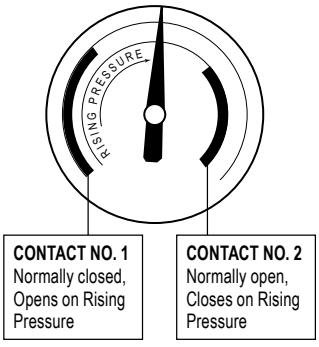

SPECIFICATIONS	
Type of power	A.C. or D.C. 24 to 250V max
Maximum amps	1.0 A
Maximum switching capacity	30 W/50 VA
Gauge accuracy	Add an additional ±2%
Minimum magnet holding force	1g
Contact pin material	Silver Tungsten
Ambient temperature limitation	0 °F to 140 °F (-18 °C to 61 °C)
Minimum full scale pressure range	0-60 psi

APPLICATIONS

- Air compressors
- Gas compressors
- Hydraulic and pneumatic circuitry
- Die-cast machinery
- Plastic injection molding machinery

WIRING AND TERMINAL LOCATION

1. Contact Switch No. 1; Red or Black
2. Contact Switch No. 2; Blue
3. Power; Green or Brown
4. Ground; Yellow/Green Stripe

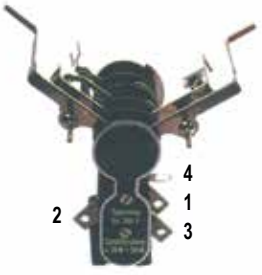

NOSHOK

DIAL INDICATING PRESSURE GAUGES STANDARD CONNECTION SIZES

100 Series		200 Series		300 Series		400/500 Series Ammonia		400 Series		500 Series	
10-100	1/8" NPT	**25-200**	1/4" NPT	**25-300**	1/4" NPT	**25-400**	1/4" NPT	**15-401**	1/8" NPT	**25-500**	1/4" NPT
10-110	1/8" NPT	**25-210**	1/4" NPT	**25-310**	1/4" NPT	**25-410**	1/4" NPT	**15-411**	1/8" NPT	**25-510**	1/4" NPT
15-100	1/8" NPT	**25-224**	1/4" NPT	**40-300**	1/4" NPT	**40-400**	1/2" NPT	**25-400**	1/4" NPT	**40-500**	1/2" NPT
15-110	1/8" NPT	**40-200**	1/4" NPT	**40-310**	1/4" NPT	**40-410**	1/2" NPT	**25-410**	1/4" NPT	**40-510**	1/2" NPT
15-120	1/8" NPT					**25-500**	1/4" NPT	**40-400**	1/2" NPT	**60-500**	1/2" NPT
20-100	1/4" NPT					**25-510**	1/4" NPT	**40-410**	1/2" NPT	**60-510**	1/2" NPT
20-110	1/4" NPT					**40-500**	1/2" NPT	**60-400**	1/2" NPT		
20-120	1/4" NPT					**40-510**	1/2" NPT	**60-410**	1/2" NPT		
20-148	1/8" 10-32 NPT										
25-100	1/4" NPT										
25-110	1/4" NPT										
25-120	1/4" NPT										
40-100	1/4" NPT										

402/502 Series		600/700 Series		800 Series		900 Series	
40-402	9/16-18 UNF 2B High Pressure	**45-640**	1/4" NPT	**60-800**	1/4" NPT	**15-901**	1/8" NPT
40-412	9/16-18 UNF 2B High Pressure	**45-740**	1/2" NPT			**15-910**	1/8" NPT
60-402	9/16-18 UNF 2B High Pressure	**45-660**	1/4" NPT			**15-911**	1/8" NPT
40-502	9/16-18 UNF 2B High Pressure	**45-760**	1/2" NPT			**20-901**	1/4" NPT
60-502	9/16-18 UNF 2B High Pressure					**20-911**	1/4" NPT
						25-900	1/4" NPT
						25-910	1/4" NPT
						25-901	1/4" NPT
						25-911	1/4" NPT
						40-901	1/4" NPT
						40-911	1/4" NPT

100 SERIES ABS & Steel CASE, DRY PRESSURE GAUGE ACCESSORIES

— = Option/accessory is available C = Consult factory for availability STD = Standard stock series specification

MODEL NO.	15-100	15-110	15-120	20-100	20-110	20-120	20-148	25-100	25-110	25-120	40-100
CONNECTION											
Black Steel Case (BSC)	C		STD	C	C	STD	—			STD	
Chrome Case (CRC)	C		—	C	C	—	—			—	—
Flat Sided ABS Case (FAC)	—		—	—		—	—	—		—	—
Stainless Steel Case (SSC)	C		—	C	C	—	—			—	—
Silicone Dampened Movement (SDM)	C	C	C	C	C	C	C	C	C	C	C
Glass Lens (GL)*	C	N/C		C	N/C		—	N/C	N/C		N/C
Homalite Lens (HL)*	—	—		—	—		—	—	—		—
Polycarbonate Lens (LL)*	—	—	—	—	—	—	—			—	—
Maximum Indicating Pointer (MIP)	—	—	—	—	—	—	—	C	C	—	—
Red Set Pointer (SP)**		C	C	C		C				C	—
Safety Glass Lens (SG)*	—	—	—	—	—	—	—			—	
Black Front Flange (BLFF) ABS Case	—		—	—		—	—	—		—	—
Chrome Front Flange (CFF) ABS Case	—		—	—		—	—	—		—	—
Chrome Front Flange (SCFF) Steel Case	C	C	—	C	C	—	—			—	
Black Front Flange (SBFF) Steel Case	C	C	—	C	C	—	—			—	
Black Rear Flange (BLRF)	—	—	—	—	—	—	—		—	—	
Black Cover Ring (BCR)**	C		—	C	C	—	—			—	
Stainless Steel Cover Ring (SSCR)**	C		—	C	C	—	—			—	—
Chrome Cover Ring (CCR)**	C		—	C	C	—	—			—	
Polished Stainless Steel Bezel (SSB)	—		STD	—		STD	—	—		STD	—
Chrome Adaptor Ring (AR)	—			—			—	—			—
Panel Mount Clamp (PMC)	—		STD	—		STD	—	—		STD	—
Rubber Case Protectors (RCP)	—	—	—	—	—	—	—			—	
10-32-UNF-2B (10-32)											
Orifice - Brass Press Fit Sintered, 20 Micron (CPO)											
Orifice - Brass Press Fit 0.1mm (BP1)											
Orifice - Brass Press Fit 0.3mm (BP3)											
Orifice - Brass Press Fit 0.8mm (BP8)											
Laser Marking (LM)											
Stainless Steel Tagging (ST)											

STANDARD ORIFICE FOR 100 SERIES GAUGE IS 0.3 MM PRESS FIT, UNLESS OTHERWISE SPECIFIED.

* A Steel, Stainless or chrome case & cover ring must be additionally ordered when lenses other than acrylic are utilized on all 100 Series.

** Only 110 Series require a Steel, Stainless or chrome case & cover ring to be additionally ordered when utilizing a set pointer or cover ring. Please consult factory when a set pointer is to be utilized on a 120 Series.

Consult factory for additional non-stock and special accessory availability.

NOSHOK

200 SERIES LOW PRESSURE DIAPHRAGM GAUGE ACCESSORIES

— = Option/accessory is available
C = Consult factory for availability
STD = Standard stock series specification

MODEL NO.	25-200	25-210	25-224	40-200
CONNECTION				
Stainless Steel Case (SSC)			—	STD
Glass Lens (GL)*			—	STD
Safety Glass Lens (SG)*			—	
Plexiglass Lens (PL)			—	
Recalibrator Lens (RL)			—	—
Red Set Pointer (SP)				
Maximum Indicating Pointer (MIP)				C
Black Front Flange (BLFF)	—		—	
304SS Front Flange (SSFF)	—	—	—	
Chrome Front Flange (CFF)	—		—	—
Black Rear Flange (BLRF)		—	—	—
304SS Rear Flange (SSRF)	—	—	—	
Black Cover Ring (BCR)			—	—
Stainless Steel Cover Ring (SSCR)			—	STD
Chrome Cover Ring (CCR)			—	—
Black Bezel w/U-Clamp (BBU)	—		—	—
SS Bezel w/U-Clamp (SSBU)	—		—	—
Rubber Case Protectors (RCP)			—	
10-32-UNF-2B (10-32)				
Orifice - Brass Press Fit 0.3mm (BP3)	—			
Orifice - Brass Threaded 0.3mm (BT3)				
Laser Marking (LM)				
Stainless Steel Tagging (ST)				

STANDARD ORIFICE FOR 200 SERIES GAUGE IS 0.3 MM PRESS FIT, UNLESS OTHERWISE SPECIFIED.

* A Steel, Stainless or chrome cover ring must be additionally ordered when lenses other than acrylic are utilized on all 2-1/2″ 200 Series.

Consult factory for additional non-stock and special accessory availability.

300 SERIES Brass CASE LIQUID-FILLED GAUGE ACCESSORIES

— = Option/accessory is available

MODEL NO.	25-300	25-310	40-300	40-310
CONNECTION				
Maximum Indicating Pointer (MIP)			—	—
Polycarbonate Lens (LL)	—	—		
Glass Lens Overlay (GLO)			—	—
Safety Glass Overlay (SGO)			—	—
Safety Glass (SG)	—	—		
Chrome Front Flange (CFF)				
Chrome Front Flange w/o Holes (CFFN)				
Brass Front Flange (BFF)				
Black Front Flange (BLFF)	—	—		
304SS Rear Flange (SSRF)	—	—		
Rear Flange (RF)			—	—
Chrome Cover Ring (CCR)				—
Chrome Bezel w/U-Clamp (CBU)	—		—	
Adaptor Ring (AR)	—		—	—
Increased Accuracy from 1.5% to 1.0% (IA)			—	—
Increased Accuracy from 1.0% to 0.5% (IA)	—	—		
SAE J1926-3:7/16-20 Adjustable Connection (SST)*				
10-32-UNF-2B (10-32)				
Orifice - Brass Threaded 0.3mm (BT3)				
Orifice - Brass Threaded 0.4mm (BT4)				
Orifice - Brass Threaded 0.8mm (BT8)				
Rubber Case Protectors (RCP)				
Laser Marking (LM)				
Stainless Steel Tagging (ST)				

STANDARD ORIFICE FOR 300 SERIES GAUGE IS 0.8 MM THREADED, UNLESS OTHERWISE SPECIFIED.

* Includes FKM o-ring. Consult factory for availability.

Consult factory for additional non-stock and special accessory availability.

400/500 SERIES ALL Stainless Steel PRESSURE GAUGES
DRY, LIQUID & AMMONIA GAUGE ACCESSORIES

— = Option/accessory is available C = Consult factory for availability STD = Standard stock series specification

MODEL NO.	15-401	15-411	25-400 / 25-500	25-410 / 25-510	40-400 / 40-500	40-410 / 40-510	60-400 / 60-500	60-410 / 60-510
CONNECTION								
Adjustable Pointer (AP)	—	—	—	—			STD	STD
Safety Glass Lens (SG)	—	—					STD	STD
Maximum Indicating Pointer (MIP)	—	—						
Red Set Pointer (SP)	—	—						
Magnetic Spring Contact, 4" 400 & 410 (MSCS)	—	—	—	—			—	—
304 SS Front Flange (SSFF)	—	—	—					
304 SS Rear Flange (SSRF)	—	—	C	C				
SS Bezel w/U-Clamp (SSBU)	—	—	—	—	—		—	
Flange Ring 304SS (SSFR)	—	—	—		—	—	—	—
304SS Panel Mount Clamp (SPMC)	—	—	—		—	—	—	—
Steel Panel Mount Clamp (PMC)	—	—	—		—	—	—	—
Increased Accuracy from 1.5% to 1.0% (IA)	—	—						
Increased Accuracy from 1.0% to 0.5% (IA)	—	—						
10-32-UNF-2B (10-32)								
Orifice - 316SS Threaded 0.8mm (ST8)								
Orifice - 316SS Threaded 0.5mm (ST5)								
Rubber Case Protectors (RCP)	—	—				—	—	—
Laser Marking (LM)								
Stainless Steel Tagging (ST)								

STANDARD ORIFICE FOR 400/500 SERIES GAUGE IS 0.8 MM THREADED, UNLESS OTHERWISE SPECIFIED.
Consult factory for additional non-stock and special accessory availability.

600/700 SERIES PROCESS GAUGE ACCESSORIES

— = Option/accessory is available

MODEL NO.	45-640	45-740	45-660	45-760
CONNECTION				
Safety Glass Lens (SG)				
Glass Lens (GL)				
Maximum Indicating Pointer (MIP)				
Overload Stop (OS)				
10-32-UNF-2B (10-32)				
Orifice - Brass Press Fit 0.3mm (BP3)		—		—
Orifice - Brass Threaded 0.8mm (BT8)		—		—
Orifice - 316SS Threaded 0.8mm (ST8)	—		—	
Laser Marking (LM)				
Stainless Steel Tagging (ST)				

STANDARD ORIFICE FOR 600/700 SERIES GAUGE IS 0.8 MM THREADED, UNLESS OTHERWISE SPECIFIED.
Consult factory for additional non-stock and special accessory availability.

800 SERIES PRECISION TEST GAUGE ACCESSORIES

— = Option/accessory is available

MODEL NO.	60-800
CONNECTION	
304 SS Front Flange (SSFF)	
304 SS Rear Flange (SSRF)	
10-32-UNF-2B (10-32)	
Orifice - Brass Press Fit 0.3mm (BP3)	
Orifice - Brass Threaded 0.8mm (BT8)	
Laser Marking (LM)	
Stainless Steel Tagging (ST)	
Carrying Case (GC)	

STANDARD ORIFICE FOR 800 SERIES GAUGE IS 0.8 MM THREADED, UNLESS OTHERWISE SPECIFIED.
Consult factory for additional non-stock and special accessory availability.

Adaptive Industrial Solutions | sales@adaptiveind.com | (877) 818-5009

NOSHOK

900 SERIES ABS & Stainless Steel LIQUID FILLED PRESSURE GAUGE ACCESSORIES

— = Option/accessory is available C = Consult factory for availability STD = Standard stock series specification

MODEL NO.	15-901	15-910	15-911	20-901	20-911	25-900	25-910	25-901	25-911	40-901	40-911
CONNECTION											
Maximum Indicating Pointer (MIP) *	—	—	—	—	—	—	—	***	***		
Red Set Pointer (SP)	—	—	—	—	—	—	—				
Safety Glass Lens (SG)	—	—	—	—	—	—	—				
Black Front Flange (BLFF)	—	—	—	—	—	—		—	—	—	—
304 SS Front Flange (SSFF)	—	—	—	—		—	—	—		—	
304 SS Rear Flange (SSRF)	—	—	—	—	—	—	—	—	—		
304 SS Polished Flange Ring (SSFR)	—	—	—	—	—	—	—	—		—	—
SS Bezel w/U-Clamp (SSBU)	—	—	—	—	—	—	—	—	—	—	
304SS Panel Mount Clamp (SPMC)	—	—	—	—	—	—	—	—		—	—
Steel Panel Mount Clamp (PMC)	—	—		—		—		—		—	—
Increased Accuracy from 1.5% to 1.0% (IA)	—	—	—	—	—	—	—			—	—
Increased Accuracy from 1.0% to 0.5% (IA)	—	—	—	—	—	—	—	—	—		
SAE J1926-3:7/16-20 Adjustable Connection (SST) **	—	—	—	—	—						
10-32-UNF-2B (10-32)											
Orifice - Brass Press Fit 0.3mm (BP3)											
Orifice - Brass Threaded 0.5mm (BT5)										—	—
Orifice - Brass Threaded 0.8mm (BT8)	—	—	—	—	—	—	—	—	—		
Rubber Case Protectors (RCP)		—				—	—				
Dry Out Charge (DRY)	—	—	—	—	—	—	—				
Laser Marking (LM)											
Stainless Steel Tagging (ST)											
GAUGE FILL OPTIONS											
Silicone (SL)	C	C	C	C	C	C	C	C	C		
Halocarbon (HL)	C	C	C	C	C	C	C	C	C		
-40 Degree Service (GY40)											
Mineral Oil (MO)	C	C	C	C	C	C	C	C	C		
CERTIFICATES											
Certified Calibration (CC)											
Cleaning for Oxygen Service (O2) Up to 1,000 psi †	C	C	C	C	C	C	C				
Cleaning for Oxygen Service (O2) 1,500 psi & up †	C	C	C	C	C	C	C				

STANDARD ORIFICE FOR 900 SERIES GAUGE IS 0.3 MM PRESS FIT, UNLESS OTHERWISE SPECIFIED.

* GY40 fill is standard for liquid filled gauges
** Includes FKM o-ring. Consult factory for availability.
*** For ranges 60 psi and above.

† Cleaning for Oxygen Service (O2) is available only for dry or HL filled gauges. Certificate of Cleaning included.

Shaded cells indicate option/accessory is available from stock. Consult factory for additional non-stock and special accessory availability.

GAUGE FILL OPTIONS

SERIES NO.	VOLUME	SILICONE	HALOCARBON®	-40° SERVICE	MINERAL OIL
300 SERIES	OZ	D.C. 200	4.2 OIL	86.5 : 13.5 GLYCERIN: H2O (d)	LIGHT VISCOSITY
25-300/25-310	2.0				
40-300/40-310	6.5				
500 SERIES					
25-500/25-510	2.0				
40-500/40-510	8.5				
60-500/60-510	31.0				
600/700 SERIES					
45-660/45-760	14.0				
900 SERIES					
25-900/25-910	2.0	C	C		C
25-901/25-911	2.0	C	C		C
40-901/40-911	8.5				

Dial Indicating Gauge Accuracy/Standard Dial Configuration

300 Series Gauges: 4″

Applies to:
400/500 Series Gauges: 4″ and 6″

900 Series Gauges: 4″

ACCURACY: ±1.0% full scale											
Primary Scale			Secondary Scales								
Dial Range	Figure	Graduation	kPa	Figure	Graduation	kg/cm²	Figure	Graduation	bar	Figure	Graduation
-30 inHg to 0 psi	-5 inHg	-0.5 inHg	-100 kPa to 0 kPa	-20 kPa	-2 kPa	-1.02 kg/cm² to 0 kg/cm²	-0.2 kg/cm²	-0.02 kg/cm²	-1 bar to 0 bar	-0.2 bar	-0.02 bar
-30 inHg to 15 psi	-10 inHg 5 psi	-1 inHg 0.5 psi	-100 kPa to 100 kPa	-50 kPa 50 kPa	-5 kPa 5 kPa	-1 kg/cm² to 1.05 kg/cm²	-0.5 kg/cm² 0.5 kg/cm²	-0.05 kg/cm² 0.05 kg/cm²	-1 bar to 1 bar	-0.5 bar 0.5 bar	-0.05 bar 0.05 bar
-30 inHg to 30 psi	-10 inHg 5 psi	-1 inHg 0.5 psi	-100 kPa to 205 kPa	-50 kPa 50 kPa	-5 kPa 5 kPa	-1 kg/cm² to 2.10 kg/cm²	-1 kg/cm² 0.5 kg/cm²	-0.1 kg/cm² 0.05 kg/cm²	-1 bar to 2.05 bar	-0.5 bar 0.5 bar	-0.05 bar 0.05 bar
-30 inHg to 60 psi	-30 inHg 10 psi	-2 inHg 1 psi	-100 kPa to 410 kPa	-100 kPa 100 kPa	-10 kPa 10 kPa	-1 kg/cm² to 4.2 kg/cm²	-1 kg/cm² 1 kg/cm²	-0.1 kg/cm² 0.1 kg/cm²	-1 bar to 4.1 bar	-1 bar 1 bar	.01 bar .1 bar
-30 inHg to 100 psi	-30 inHg 20 psi	-5 inHg 2 psi	-100 kPa to 680 kPa	-100 kPa 200 kPa	-20 kPa 20 kPa	-1 kg/cm² to 7 kg/cm²	-1 kg/cm² 2 kg/cm²	-0.2 kg/cm² 0.2 kg/cm²	-1 bar to 6.8 bar	-1 bar 2 bar	-0.2 bar 0.2 bar
-30 inHg to 160 psi	-30 inHg 20 psi	-5 inHg 2 psi	-100 kPa to 1,100 kPa	-100 kPa 200 kPa	-20 kPa 20 kPa	-1 kg/cm² to 11.2 kg/cm²	-1 kg/cm² 2 kg/cm²	-0.2 kg/cm² 0.2 kg/cm²	-1 bar to 11 bar	-1 bar 2 bar	-0.2 bar 0.2 bar
-30 inHg to 200 psi	-30 inHg 40 psi	-5 inHg 4 psi	-100 kPa to 1,360 kPa	-100 kPa 400 kPa	-20 kPa 40 kPa	-1 kg/cm² to 14 kg/cm²	-1 kg/cm² 4 kg/cm²	-0.2 kg/cm² 0.4 kg/cm²	-1 bar to 13.6 bar	-1 bar 4 bar	-0.2 bar 0.4 bar
-30 inHg to 300 psi	-30 inHg 50 psi	-10 inHg 5 psi	-100 kPa to 2,050 kPa	-100 kPa 500 kPa	-50 kPa 50 kPa	-1 kg/cm² to 21 kg/cm²	-1 kg/cm² 5 kg/cm²	-0.5 kg/cm² 0.5 kg/cm²	-1 bar to 20.5 bar	-1 bar 5 bar	-0.5 bar 0.5 bar
0 psi to 15 psi	3 psi	0.2 psi	0 kPa to 102 kPa	30 kPa	2 kPa	0 kg/cm² to 1.04 kg/cm²	0.3 kg/cm²	0.04 kg/cm²	0 bar to 1.02 bar	0.3 bar	0.02 bar
0 psi to 30 psi	5 psi	0.5 psi	0 kPa to 205 kPa	50 kPa	5 kPa	0 kg/cm² to 2.1 kg/cm²	0.5 kg/cm²	0.1 kg/cm²	0 bar to 2.05 bar	0.5 bar	0.05 bar
0 psi to 60 psi	10 psi	1 psi	0 kPa to 410 kPa	100 kPa	10 kPa	0 kg/cm² to 4.2 kg/cm²	1 kg/cm²	0.1 kg/cm²	0 bar to 4.1 bar	1 bar	0.1 bar
0 psi to 100 psi	20 psi	2 psi	0 kPa to 680 kPa	200 kPa	20 kPa	0 kg/cm² to 7 kg/cm²	2 kg/cm²	0.2 kg/cm²	0 bar to 6.8 bar	2 bar	0.2 bar
0 psi to 160 psi	20 psi	2 psi	0 kPa to 1,100 kPa	200 kPa	20 kPa	0 kg/cm² to 11.2 kg/cm²	2 kg/cm²	0.2 kg/cm²	0 bar to 11 bar	2 bar	0.2 bar
0 psi to 200 psi	40 psi	4 psi	0 kPa to 1,360 kPa	400 kPa	40 kPa	0 kg/cm² to 14 kg/cm²	4 kg/cm²	0.4 kg/cm²	0 bar to 13.6 bar	4 bar	0.4 bar
0 psi to 300 psi	50 psi	5 psi	0 kPa to 2,050 kPa	500 kPa	50 kPa	0 kg/cm² to 21 kg/cm²	5 kg/cm²	0.5 kg/cm²	0 bar to 20.5 bar	5 bar	0.5 bar
0 psi to 400 psi	50 psi	5 psi	0 kPa to 2,750 kPa	500 kPa	50 kPa	0 kg/cm² to 28 kg/cm²	5 kg/cm²	0.5 kg/cm²	0 bar to 27.5 bar	5 bar	0.5 bar
0 psi to 600 psi	100 psi	10 psi	0 kPa to 4,100 kPa	1,000 kPa	100 kPa	0 kg/cm² to 42 kg/cm²	10 kg/cm²	1 kg/cm²	0 bar to 41 bar	10 bar	1 bar
0 psi to 1,000 psi	200 psi	20 psi	0 kPa to 6,800 kPa	2,000 kPa	200 kPa	0 kg/cm² to 70 kg/cm²	20 kg/cm²	2 kg/cm²	0 bar to 68 bar	20 bar	2 bar
0 psi to 1,500 psi	300 psi	20 psi	0 kPa to 10,200 kPa	3,000 kPa	200 kPa	0 kg/cm² to 104 kg/cm²	30 kg/cm²	2 kg/cm²	0 bar to 102 bar	30 bar	2 bar
0 psi to 2,000 psi	400 psi	40 psi	0 kPa to 13,600 kPa	4,000 kPa	400 kPa	0 kg/cm² to 140 kg/cm²	40 kg/cm²	4 kg/cm²	0 bar to 136 bar	40 bar	4 bar
0 psi to 3,000 psi	500 psi	50 psi	0 kPa to 20,500 kPa	5,000 kPa	500 kPa	0 kg/cm² to 210 kg/cm²	50 kg/cm²	5 kg/cm²	0 bar to 205 bar	50 bar	5 bar
0 psi to 5,000 psi	1,000 psi	100 psi	0 kPa to 34,000 kPa	10,000 kPa	1,000 kPa	0 kg/cm² to 350 kg/cm²	100 kg/cm²	10 kg/cm²	0 bar to 340 bar	100 bar	10 bar
0 psi to 6,000 psi	1,000 psi	100 psi	0 kPa to 41,000 kPa	10,000 kPa	1,000 kPa	0 kg/cm² to 420 kg/cm²	100 kg/cm²	10 kg/cm²	0 bar to 410 bar	100 bar	10 bar
0 psi to 7,500 psi	1,500 psi	100 psi	0 kPa to 51,000 kPa	10,000 kPa	1,000 kPa	0 kg/cm² to 520 kg/cm²	100 kg/cm²	10 kg/cm²	0 bar to 510 bar	100 bar	10 bar
0 psi to 10,000 psi	2,000 psi	200 psi	0 kPa to 68,000 kPa	20,000 kPa	2,000 kPa	0 kg/cm² to 700 kg/cm²	200 kg/cm²	20 kg/cm²	0 bar to 680 bar	200 bar	20 bar
0 psi to 15,000 psi	3,000 psi	200 psi	0 kPa to 102,000 kPa	30,000 kPa	2,000 kPa	0 kg/cm² to 1,040 kg/cm²	300 kg/cm²	20 kg/cm²	0 bar to 1,030 bar	300 bar	20 bar
0 psi to 20,000 psi	4,000 psi	400 psi	0 kPa to 136,000 kPa	40,000 kPa	4,000 kPa	0 kg/cm² to 1,400 kg/cm²	400 kg/cm²	40 kg/cm²	0 bar to 1,360 bar	400 bar	40 bar
0 psi to 30,000 psi	5,000 psi	500 psi	0 kPa to 205,000 kPa	50,000 kPa	5,000 kPa	0 kg/cm² to 2,100 kg/cm²	500 kg/cm²	50 kg/cm²	0 bar to 2,050 bar	500 bar	50 bar
0 psi to 40,000 psi	5,000 psi	500 psi	0 kPa to 275,000 kPa	50,000 kPa	5,000 kPa	0 kg/cm² to 2,800 kg/cm²	500 kg/cm²	50 kg/cm²	0 bar to 2,750 bar	500 bar	50 bar
0 psi to 50,000 psi	10,000 psi	1000 psi	0 kPa to 340,000 kPa	100,000 kPa	10,000 kPa	0 kg/cm² to 3,500 kg/cm²	1,000 kg/cm²	100 kg/cm²	0 bar to 3,400 bar	1,000 bar	100 bar
0 psi to 60,000 psi	10,000 psi	1000 psi	0 kPa to 410,000 kPa	100,000 kPa	10,000 kPa	0 kg/cm² to 4,200 kg/cm²	1,000 kg/cm²	100 kg/cm²	0 bar to 4,100 bar	1,000 bar	100 bar
0 psi to 75,000 psi	15,000 psi	1000 psi	0 kPa to 510,000 kPa	100,000 kPa	10,000 kPa	0 kg/cm² to 5,200 kg/cm²	1,000 kg/cm²	100 kg/cm²	0 bar to 5,100 bar	1,000 bar	100 bar
0 psi to 100,000 psi	20,000 psi	2000 psi	0 kPa to 680,000 kPa	200,000 kPa	20,000 kPa	0 kg/cm² to 7,000 kg/cm²	2,000 kg/cm²	200 kg/cm²	0 bar to 6,800 bar	2,000 bar	200 bar

Dial Indicating Gauge Accuracy/Standard Dial Configuration

Applies to:

200 Series Gauges: 2-1/2″ and 4″

700 Series Gauges (Low Pressure): 4-1/2″

ACCURACY: ±1.6% full scale					
Standard Dial Configurations					
Dial Range	Figure Interval	Graduation Intervals	Dial Range	Figure Interval	Graduation Intervals
-15 inH_2O to 0 inH_2O	-3 inH_2O	-0.2 inH_2O	0 oz/in^2 to 10 oz/in^2	2 oz/in^2	0.2 oz/in^2
-30 inH_2O to 0 inH_2O	-5 inH_2O	-0.5 inH_2O	0 oz/in^2 to 15 oz/in^2	3 oz/in^2	0.2 oz/in^2
-60 inH_2O to 0 inH_2O	-10 inH_2O	-1 inH_2O	0 oz/in^2 to 30 oz/in^2	5 oz/in^2	0.5 oz/in^2
-100 inH_2O to 0 inH_2O	-20 inH_2O	-2 inH_2O	0 oz/in^2 to 35 oz/in^2	5 oz/in^2	0.5 oz/in^2
-60 inH_2O to 60 inH_2O	-10 inH_2O | 10 inH_2O	-1 inH_2O | 1 inH_2O	0 oz/in^2 to 60 oz/in^2	10 oz/in^2	1 oz/in^2
0 inH_2O to 10 inH_2O	2 inH_2O	0.2 inH_2O	0 oz/in^2 to 100 oz/in^2	20 oz/in^2	2 oz/in^2
0 inH_2O to 15 inH_2O	3 inH_2O	0.2 inH_2O	0 oz/in^2 to 160 oz/in^2**	40 oz/in^2	4 oz/in^2
0 inH_2O to 30 inH_2O	5 inH_2O	0.5 inH_2O	0 oz/in^2 inH_2O to 20 oz/in^2 inH_2O	4 oz/in^2 - 10 inH_2O	0.4 oz/in^2 - 1 inH_2O
0 inH_2O to 60 inH_2O	10 inH_2O	1 inH_2O	0 oz/in^2 inH_2O to 32 oz/in^2 inH_2O	4 oz/in^2 - 10 inH_2O	0.5 oz/in^2 - 1 inH_2O
0 inH_2O to 100 inH_2O	20 inH_2O	2 inH_2O	0 psi to 3 psi	0.5 psi	0.05 psi
0 inH_2O to 160 inH_2O*	40 inH_2O	4 inH_2O	0 psi to 5 psi	1 psi	0.1 psi
0 inH_2O to 200 inH_2O	40 inH_2O	4 inH_2O	0 psi to 10 psi	2 psi	0.2 psi

* The values in the table are for 2-1/2". On 4" & 4-1/2" 0 inH_20 to 160 inH_20 gauges, the Figure is 20 inH_20, and the Graduation is 2 inH_20.

** The values in the table are for 2-1/2". On 4" & 4-1/2" 0 oz/in^2 to 160 oz/in^2 gauges, the Figure is 20 oz/in^2, and the Graduation is 2 oz/in^2.

Dial Indicating Gauge Accuracy/Standard Dial Configuration

Applies to:

100 Series Gauges: 4" | 300 Series Gauges: 2-1/2" | 400/500 Series Gauges: 2-1/2" | 900 Series Gauges: 2-1/2"

ACCURACY: ±1.6% full scale											
Primary Scale			Secondary Scales								
Dial Range	Figure	Graduation	kPa	Figure	Graduation	kg/cm²	Figure	Graduation	bar	Figure	Graduation
-30 inHg to 0 psi	-5 inHg	-0.5 inHg	-100 kPa to 0 kPa	-20 kPa	-2 kPa	-1.02 kg/cm² to 0 kg/cm²	-0.2 kg/cm²	-0.02 kg/cm²	-1 bar to 0 bar	-0.2 bar	-0.02 bar
-30 inHg to 15 psi	-10 inHg 5 psi	-1 inHg 0.5 psi	-100 kPa to 100 kPa	-50 kPa 50 kPa	-5 kPa 5 kPa	-1 kg/cm² to 1.05 kg/cm²	-0.5 kg/cm² 0.5 kg/cm²	-0.05 kg/cm² 0.05 kg/cm²	-1 bar to 1 bar	-0.5 bar 0.5 bar	-0.05 bar 0.05 bar
-30 inHg to 30 psi	-30 inHg 10 psi	-2 inHg 1 psi	-100 kPa to 205 kPa	-100 kPa 100 kPa	-10 kPa 10 kPa	-1 kg/cm² to 2.10 kg/cm²	-1 kg/cm² 1 kg/cm²	-0.1 kg/cm² 0.1 kg/cm²	-1 bar to 2 bar	-1 bar 1 bar	-0.1 bar 0.1 bar
-30 inHg to 60 psi	-30 inHg 20 psi	-5 inHg 2 psi	-100 kPa to 400 kPa	-100 kPa 200 kPa	-20 kPa 20 kPa	-1 kg/cm² to 4.2 kg/cm²	-1 kg/cm² 2 kg/cm²	-2 kg/cm² 0.2 kg/cm²	-1 bar to 4 bar	-1 bar 2 bar	-0.2 bar 0.2 bar
-30 inHg to 100 psi	-30 inHg 20 psi	-5 inHg 2 psi	-100 kPa to 680 kPa	-100 kPa 200 kPa	-20 kPa 20 kPa	-1 kg/cm² to 7 kg/cm²	-1 kg/cm² 2 kg/cm²	-0.2 kg/cm² 0.2 kg/cm²	-1 bar to 6.8 bar	-1 bar 2 bar	-0.2 bar 0.2 bar
-30 inHg to 160 psi	-30 inHg 40 psi	-10 inHg 4 psi	-100 kPa to 1,080 kPa	-100 kPa 400 kPa	-50 kPa 40 kPa	-1 kg/cm² to 11.2 kg/cm²	-1 kg/cm² 4 kg/cm²	-0.5 kg/cm² 0.4 kg/cm²	-1 bar to 11 bar	-1 bar 4 bar	-0.5 bar 0.4 bar
-30 inHg to 200 psi	-30 inHg 40 psi	-10 inHg 4 psi	-100 kPa to 1,360 kPa	-100 kPa 400 kPa	-50 kPa 40 kPa	-1 kg/cm² to 14 kg/cm²	-1 kg/cm² 4 kg/cm²	-0.5 kg/cm² 0.4 kg/cm²	-1 bar to 13.6 bar	-1 bar 4 bar	-0.5 bar 0.4 bar
-30 inHg to 300 psi	-30 inHg 50 psi	-10 inHg 5 psi	-100 kPa to 2,050 kPa	-100 kPa 500 kPa	-50 kPa 50 kPa	-1 kg/cm² to 21 kg/cm²	-1 kg/cm² 5 kg/cm²	-0.5 kg/cm² 0.5 kg/cm²	-1 bar to 20.5 bar	-1 bar 5 bar	-0.5 bar 0.5 bar
0 psi to 15 psi	3 psi	0.2 psi	0 kPa to 102 kPa	30 kPa	2 kPa	0 kg/cm² to 1.04 kg/cm²	0.3 kg/cm²	0.02 kg/cm²	0 bar to 1.02 bar	0.3 bar	0.02 bar
0 psi to 30 psi	5 psi	0.5 psi	0 kPa to 205 kPa	50 kPa	5 kPa	0 kg/cm² to 2.1 kg/cm²	0.5 kg/cm²	0.05 kg/cm²	0 bar to 2.05 bar	0.5 bar	0.05 bar
0 psi to 60 psi	10 psi	1 psi	0 kPa to 410 kPa	100 kPa	10 kPa	0 kg/cm² to 4.2 kg/cm²	1 kg/cm²	0.1 kg/cm²	0 bar to 4.10 bar	1 bar	0.1 bar
0 psi to 100 psi	20 psi	2 psi	0 kPa to 680 kPa	200 kPa	20 kPa	0 kg/cm² to 7 kg/cm²	2 kg/cm²	0.2 kg/cm²	0 bar to 6.8 bar	2 bar	0.2 bar
0 psi to 160 psi	40 psi	4 psi	0 kPa to 1,080 kPa	400 kPa	40 kPa	0 kg/cm² to 11.2 kg/cm²	4 kg/cm²	0.4 kg/cm²	0 bar to 11 bar	4 bar	0.4 bar
0 psi to 200 psi	40 psi	4 psi	0 kPa to 1,360 kPa	400 kPa	40 kPa	0 kg/cm² to 14 kg/cm²	4 kg/cm²	0.4 kg/cm²	0 bar to 13.6 bar	4 bar	0.4 bar
0 psi to 300 psi	50 psi	5 psi	0 kPa to 2,050 kPa	500 kPa	50 kPa	0 kg/cm² to 21 kg/cm²	5 kg/cm²	0.5 kg/cm²	0 bar to 20.5 bar	5 bar	0.5 bar
0 psi to 400 psi	100 psi	10 psi	0 kPa to 2,700 kPa	1,000 kPa	100 kPa	0 kg/cm² to 28 kg/cm²	10 kg/cm²	1 kg/cm²	0 bar to 27 bar	10 bar	1 bar
0 psi to 600 psi	100 psi	10 psi	0 kPa to 4,100 kPa	1,000 kPa	100 kPa	0 kg/cm² to 42 kg/cm²	10 kg/cm²	1 kg/cm²	0 bar to 41 bar	10 bar	1 bar
0 psi to 1,000 psi	200 psi	20 psi	0 kPa to 6,800 kPa	2,000 kPa	200 kPa	0 kg/cm² to 70 kg/cm²	20 kg/cm²	2 kg/cm²	0 bar to 68 bar	20 bar	2 bar
0 psi to 1,500 psi	300 psi	20 psi	0 kPa to 10,200 kPa	3,000 kPa	200 kPa	0 kg/cm² to 104 kg/cm²	30 kg/cm²	2 kg/cm²	0 bar to 102 bar	30 bar	2 bar
0 psi to 2,000 psi	400 psi	40 psi	0 kPa to 13,600 kPa	4,000 kPa	400 kPa	0 kg/cm² to 140 kg/cm²	40 kg/cm²	4 kg/cm²	0 bar to 136 bar	40 bar	4 bar
0 psi to 3,000 psi	500 psi	50 psi	0 kPa to 20,500 kPa	5,000 kPa	500 kPa	0 kg/cm² to 210 kg/cm²	50 kg/cm²	5 kg/cm²	0 bar to 205 bar	50 bar	5 bar
0 psi to 5,000 psi	1,000 psi	100 psi	0 kPa to 34,000 kPa	10,000 kPa	1,000 kPa	0 kg/cm² to 350 kg/cm²	100 kg/cm²	10 kg/cm²	0 bar to 340 bar	100 bar	10 bar
0 psi to 6,000 psi	1,000 psi	100 psi	0 kPa to 41,000 kPa	10,000 kPa	1,000 kPa	0 kg/cm² to 420 kg/cm²	100 kg/cm²	10 kg/cm²	0 bar to 410 bar	100 bar	10 bar
0 psi to 7,500 psi	1,500 psi	100 psi	0 kPa to 51,000 kPa	10,000 kPa	1,000 kPa	0 kg/cm² to 520 kg/cm²	100 kg/cm²	10 kg/cm²	0 bar to 510 bar	100 bar	10 bar
0 psi to 10,000 psi	2,000 psi	200 psi	0 kPa to 68,000 kPa	20,000 kPa	2,000 kPa	0 kg/cm² to 700 kg/cm²	200 kg/cm²	20 kg/cm²	0 bar to 680 bar	200 bar	20 bar
0 psi to 15,000 psi	3,000 psi	200 psi	0 kPa to 102,000 kPa	30,000 kPa	2,000 kPa	0 kg/cm² to 1,040 kg/cm²	300 kg/cm²	20 kg/cm²	0 bar to 1,020 bar	300 bar	20 bar

Dial Indicating Gauge Accuracy/Standard Dial Configuration

Applies to:
600/700 Series Gauges: 4-1/2"

ACCURACY: ±0.5% full scale											
Primary Scale			Secondary Scales								
Dial Range	Figure	Graduation	kPa	Figure	Graduation	kg/cm²	Figure	Graduation	bar	Figure	Graduation
-30 inHg to 0 psi	-5 inHg	-0.2 inHg	-101 kPa to 0 kPa	-20 kPa	-1 kPa	-1.03 kg/cm² to 0 kg/cm²	-0.2 kg/cm²	-0.01 kg/cm²	-1.01 bar to 0 bar	-0.2 bar	-0.01 bar
-30 inHg to 15 psi	-5 inHg 3 psi	-0.5 inHg 0.2 psi	-100 kPa to 102 kPa	-20 kPa 20 kPa	-2 kPa 2 kPa	-1 kg/cm² to 1.04 kg/cm²	-0.2 kg/cm² 0.2 kg/cm2	-0.02 kg/cm² 0.02 kg/cm2	-1 bar to 1.02 bar	-0.2 bar 0.2 bar	-0.02 bar 0.02 bar
-30 inHg to 30 psi	-10 inHg 5 psi	-1 inHg 0.5 psi	-100 kPa to 205 kPa	-50 kPa 50 kPa	-5 kPa 5 kPa	-1 kg/cm² to 2.10 kg/cm²	-0.5 kg/cm² 0.5 kg/cm2	-0.05 kg/cm² 0.05 kg/cm2	-1 bar to 2.05 bar	-0.5 bar 0.5 bar	-0.05 bar 0.05 bar
-30 inHg to 60 psi	-10 inHg 10 psi	-1 inHg 0.4 psi	-100 kPa to 412 kPa	-50 kPa 100 kPa	-5 kPa 4 kPa	-1 kg/cm² to 4.2 kg/cm²	-0.5 kg/cm² 1 kg/cm2	-0.01 kg/cm² 0.04 kg/cm2	-1 bar to 4.12 bar	-0.5 bar 1 bar	-0.01 bar 0.04 bar
-30 inHg to 100 psi	-30 inHg 10 psi	-2 inHg 1 psi	-100 kPa to 680 kPa	-100 kPa 100 kPa	-10 kPa 10 kPa	-1 kg/cm² to 7 kg/cm²	-1 kg/cm² 1 kg/cm2	-0.1 kg/cm² 0.1 kg/cm2	-1 bar to 6.8 bar	-1 bar 1 bar	-0.1 bar 0.1 bar
-30 inHg to 160 psi	-30 inHg 20 psi	-5 inHg 2 psi	-100 kPa to 1,100 kPa	-100 kPa 200 kPa	-20 kPa 20 kPa	-1 kg/cm² to 11.2 kg/cm²	-1 kg/cm² 2 kg/cm2	-0.2 kg/cm² 0.2 kg/cm2	-1 bar to 11 bar	-1 bar 2 bar	-0.2 bar 0.2 bar
-30 inHg to 200 psi	-30 inHg 20 psi	-5 inHg 2 psi	-100 kPa to 1,360 kPa	-100 kPa 200 kPa	-20 kPa 20 kPa	-1 kg/cm² to 14 kg/cm²	-1 kg/cm² 2 kg/cm2	-0.2 kg/cm² 0.2 kg/cm2	-1 bar to 13.6 bar	-1 bar 2 bar	-0.2 bar 0.2 bar
0 psi to 15 psi	3 psi	0.1 psi	0 kPa to 103 kPa	30 kPa	1 kPa	0 kg/cm² to 1.05 kg/cm²	0.3 kg/cm²	0.01 kg/cm²	0 bar to 1.03 bar	0.3 bar	0.01 bar
0 psi to 30 psi	5 psi	0.2 psi	0 kPa to 206 kPa	50 kPa	2 kPa	0 kg/cm² to 2.1 kg/cm²	0.5 kg/cm²	0.02 kg/cm²	0 bar to 2.06 bar	0.5 bar	0.02 bar
0 psi to 60 psi	10 psi	0.4 psi	0 kPa to 412 kPa	100 kPa	4 kPa	0 kg/cm² to 4.2 kg/cm²	1 kg/cm²	0.04 kg/cm²	0 bar to 4.12 bar	1 bar	0.04 bar
0 psi to 100 psi	10 psi	1 psi	0 kPa to 680 kPa	100 kPa	10 kPa	0 kg/cm² to 7 kg/cm²	1 kg/cm²	0.1 kg/cm²	0 bar to 6.8 bar	1 bar	0.1 bar
0 psi to 160 psi	20 psi	1 psi	0 kPa to 1,100 kPa	200 kPa	10 kPa	0 kg/cm² to 11.2 kg/cm²	2 kg/cm²	0.1 kg/cm²	0 bar to 11 bar	2 bar	0.1 bar
0 psi to 200 psi	20 psi	2 psi	0 kPa to 1,360 kPa	200 kPa	20 kPa	0 kg/cm² to 14 kg/cm²	2 kg/cm²	0.2 kg/cm²	0 bar to 13.6 bar	2 bar	0.2 bar
0 psi to 300 psi	50 psi	2 psi	0 kPa to 2,060 kPa	500 kPa	20 kPa	0 kg/cm² to 21 kg/cm2	5 kg/cm²	0.2 kg/cm²	0 bar to 20.6 bar	5 bar	0.2 bar
0 psi to 400 psi	40 psi	4 psi	0 kPa to 2,720 kPa	400 kPa	40 kPa	0 kg/cm² to 28 kg/cm²	4 kg/cm²	0.4 kg/cm²	0 bar to 27.2 bar	4 bar	0.4 bar
0 psi to 600 psi	100 psi	4 psi	0 kPa to 4,120 kPa	1,000 kPa	40 kPa	0 kg/cm² to 42 kg/cm²	10 kg/cm²	0.4 kg/cm²	0 bar to 41.2 bar	10 bar	0.4 bar
0 psi to 1,000 psi	100 psi	10 psi	0 kPa to 6,800 kPa	1,000 kPa	100 kPa	0 kg/cm² to 70 kg/cm²	10 kg/cm²	1 kg/cm²	0 bar to 68 bar	10 bar	1 bar
0 psi to 1,500 psi	300 psi	10 psi	0 kPa to 10,300 kPa	3,000 kPa	100 kPa	0 kg/cm² to 105 kg/cm²	30 kg/cm²	1 kg/cm²	0 bar to 103 bar	30 bar	1 bar
0 psi to 2,000 psi	200 psi	20 psi	0 kPa to 13,600 kPa	2,000 kPa	200 kPa	0 kg/cm² to 140 kg/cm²	20 kg/cm²	2 kg/cm²	0 bar to 136 bar	20 bar	2 bar
0 psi to 3,000 psi	500 psi	20 psi	0 kPa to 20,600 kPa	5,000 kPa	200 kPa	0 kg/cm² to 210 kg/cm²	50 kg/cm²	2 kg/cm²	0 bar to 206 bar	50 bar	2 bar
0 psi to 5,000 psi	500 psi	50 psi	0 kPa to 34,000 kPa	5,000 kPa	500 kPa	0 kg/cm² to 350 kg/cm²	50 kg/cm²	5 kg/cm²	0 bar to 340 bar	50 bar	5 bar
0 psi to 6,000 psi	1,000 psi	40 psi	0 kPa to 41,200 kPa	10,000 kPa	400 kPa	0 kg/cm² to 420 kg/cm²	100 kg/cm²	4 kg/cm²	0 bar to 412 bar	100 bar	4 bar
0 psi to 10,000 psi	1,000 psi	100 psi	0 kPa to 68,000 kPa	10,000 kPa	1,000 kPa	0 kg/cm² to 700 kg/cm²	100 kg/cm²	10 kg/cm²	0 bar to 680 bar	100 bar	10 bar
0 psi to 15,000 psi	3,000 psi	100 psi	0 kPa to 103,000 kPa	30,000 kPa	1,000 kPa	0 kg/cm² to 1,050 kg/cm²	300 kg/cm²	10 kg/cm²	0 bar to 1,030 bar	300 bar	10 bar
0 psi to 20,000 psi	2,000 psi	200 psi	0 kPa to 136,000 kPa	20,000 kPa	2,000 kPa	0 kg/cm² to 1,400 kg/cm²	200 kg/cm²	20 kg/cm²	0 bar to 1,360 bar	200 bar	20 bar
0 psi to 30,000 psi	5,000 psi	200 psi	0 kPa to 206,000 kPa	50,000 kPa	2,000 kPa	0 kg/cm² to 2,100 kg/cm²	500 kg/cm²	20 kg/cm²	0 bar to 2,060 bar	500 bar	20 bar
0 psi to 40,000 psi	4,000 psi	400 psi	0 kPa to 272,000 kPa	40,000 kPa	4,000 kPa	0 kg/cm² to 2,800 kg/cm²	400 kg/cm²	40 kg/cm²	0 bar to 2,720 bar	400 bar	40 bar
0 psi to 50,000 psi	5,000 psi	500 psi	0 kPa to 340,000 kPa	50,000 kPa	5,000 kPa	0 kg/cm² to 3,500 kg/cm²	500 kg/cm²	50 kg/cm²	0 bar to 3,400 bar	500 bar	50 bar
0 psi to 60,000 psi	10,000 psi	400 psi	0 kPa to 412,000 kPa	100,000 kPa	4,000 kPa	0 kg/cm² to 4,200 kg/cm²	1,000 kg/cm²	40 kg/cm²	0 bar to 4,120 bar	1,000 bar	40 bar

Dial Indicating Gauge Accuracy/Standard Dial Configuration

Applies to:

100 Series Gauges: 1-1/2″, 2″ and 2-1/2″ | **400 Series Gauges: 1-1/2″** | **900 Series Gauges: 1-1/2″ and 2″**

ACCURACY: ±2.5% full scale											
Primary Scale			Secondary Scales								
Dial Range	Figure	Graduation	kPa	Figure	Graduation	kg/cm²	Figure	Graduation	bar	Figure	Graduation
-30 inHg to 0 psi	-5 inHg	-0.5 inHg	-100 kPa to 0 kPa	-20 kPa	-5 kPa	-1 kg/cm² to 0 kg/cm²	-0.2 kg/cm²	-0.05 kg/cm²	-1 bar to 0 bar	-0.2 bar	-0.05 bar
-30 inHg to 15 psi	-10 inHg 5 psi	-1 inHg 0.5 psi	-100 kPa to 100 kPa	-50 kPa 50 kPa	-5 kPa 5 kPa	-1 kg/cm² to 1.05 kg/cm²	-0.5 kg/cm² 0.5 kg/cm²	-0.05 kg/cm² 0.05 kg/cm²	-1 bar to 1 bar	-0.5 bar 0.5 bar	-0.05 bar 0.05 bar
-30 inHg to 30 psi	-30 inHg 10 psi	-2 inHg 1 psi	-100 kPa to 200 kPa	-100 kPa 100 kPa	-10 kPa 10 kPa	-1 kg/cm² to 2.10 kg/cm²	-1 kg/cm² 1 kg/cm²	-0.1 kg/cm² 0.1 kg/cm²	-1 bar to 2 bar	-1 bar 1 bar	-0.1 bar 0.1 bar
-30 inHg to 60 psi	-30 inHg 20 psi	-5 inHg 2 psi	-100 kPa to 400 kPa	-100 kPa 200 kPa	-20 kPa 20 kPa	-1 kg/cm² to 4.2 kg/cm²	-1 kg/cm² 2 kg/cm²	-0.2 kg/cm² 0.2 kg/cm²	-1 bar to 4 bar	-1 bar 2 bar	-0.2 bar 0.2 bar
-30 inHg to 100 psi	-30 inHg 20 psi	-10 inHg 5 psi	-100 kPa to 680 kPa	-100 kPa 200 kPa	-50 kPa 50 kPa	-1 kg/cm² to 7 kg/cm²	-1 kg/cm² 2 kg/cm²	-0.5 kg/cm² 0.5 kg/cm²	-1 bar to 6.8 bar	-1 bar 2 bar	-0.5 bar 0.5 bar
-30 inHg to 160 psi	-30 inHg 40 psi	-10 inHg 4 psi	-100 kPa to 1,100 kPa	-100 kPa 400 kPa	-50 kPa 40 kPa	-1 kg/cm² to 11.2 kg/cm²	-1 kg/cm² 4 kg/cm²	-0.5 kg/cm² 0.4 kg/cm²	-1 bar to 11 bar	-1 bar 4 bar	-0.5 bar 0.4 bar
-30 inHg to 200 psi	-30 inHg 40 psi	-10 inHg 4 psi	-100 kPa to 1,360 kPa	-100 kPa 400 kPa	-50 kPa 40 kPa	-1 kg/cm² to 14 kg/cm²	-1 kg/cm² 4 kg/cm²	-0.5 kg/cm² 0.4 kg/cm²	-1 bar to 13.6 bar	-1 bar 4 bar	-0.5 bar 0.4 bar
-30 inHg to 300 psi	-30 inHg 100 psi	-30 inHg 10 psi	-100 kPa to 2,050 kPa	-100 kPa 1,000 kPa	-100 kPa 100 kPa	-1 kg/cm² to 21 kg/cm²	-1 kg/cm² 10 kg/cm²	-1 kg/cm² 1 kg/cm²	-1 bar to 20.5 bar	-1 bar 10 bar	-1 bar 1 bar
0 psi to 15 psi	3 psi	0.5 psi	0 kPa to 100 kPa	30 kPa	5 kPa	0 kg/cm² to 1.05 kg/cm²	0.3 kg/cm²	0.05 kg/cm²	0 bar to 1 bar	0.3 bar	0.05 bar
0 psi to 30 psi	5 psi	0.5 psi	0 kPa to 205 kPa	50 kPa	5 kPa	0 kg/cm² to 2.1 kg/cm²	0.5 kg/cm²	0.05 kg/cm²	0 bar to 2.05 bar	0.5 bar	0.05 bar
0 psi to 60 psi	10 psi	1 psi	0 kPa to 410 kPa	100 kPa	10 kPa	0 kg/cm² to 4.2 kg/cm²	1 kg/cm²	0.1 kg/cm²	0 bar to 4.1 bar	1 bar	0.1 bar
0 psi to 100 psi	20 psi	2 psi	0 kPa to 680 kPa	200 kPa	20 kPa	0 kg/cm² to 7 kg/cm²	2 kg/cm²	0.2 kg/cm²	0 bar to 6.8 bar	2 bar	0.2 bar
0 psi to 160 psi	40 psi	4 psi	0 kPa to 1,100 kPa	400 kPa	40 kPa	0 kg/cm² to 11.2 kg/cm²	4 kg/cm²	0.4 kg/cm²	0 bar to 11 bar	4 bar	0.4 bar
0 psi to 200 psi	40 psi	4 psi	0 kPa to 1,360 kPa	400 kPa	40 kPa	0 kg/cm² to 14 kg/cm²	4 kg/cm²	0.4 kg/cm²	0 bar to 13.6 bar	4 bar	0.4 bar
0 psi to 300 psi	50 psi	5 psi	0 kPa to 2,050 kPa	500 kPa	50 kPa	0 kg/cm² to 21 kg/cm²	5 kg/cm²	0.5 kg/cm²	0 bar to 20.5 bar	5 bar	0.5 bar
0 psi to 400 psi	100 psi	10 psi	0 kPa to 2,700 kPa	1,000 kPa	100 kPa	0 kg/cm² to 28 kg/cm²	10 kg/cm²	1 kg/cm²	0 bar to 27 bar	10 bar	1 bar
0 psi to 600 psi	100 psi	10 psi	0 kPa to 4,100 kPa	1,000 kPa	100 kPa	0 kg/cm² to 42 kg/cm²	10 kg/cm²	1 kg/cm²	0 bar to 41 bar	10 bar	1 bar
0 psi to 1,000 psi	200 psi	20 psi	0 kPa to 6,800 kPa	2,000 kPa	200 kPa	0 kg/cm² to 70 kg/cm²	20 kg/cm²	2 kg/cm²	0 bar to 68 bar	20 bar	2 bar
0 psi to 1,500 psi	300 psi	50 psi	0 kPa to 10,000 kPa	3,000 kPa	500 kPa	0 kg/cm² to 105 kg/cm²	30 kg/cm²	5 kg/cm²	0 bar to 100 bar	30 bar	5 bar
0 psi to 2,000 psi	400 psi	40 psi	0 kPa to 13,600 kPa	4,000 kPa	400 kPa	0 kg/cm² to 140 kg/cm²	40 kg/cm²	4 kg/cm²	0 bar to 136 bar	40 bar	4 bar
0 psi to 3,000 psi	500 psi	50 psi	0 kPa to 20,500 kPa	5,000 kPa	500 kPa	0 kg/cm² to 210 kg/cm²	50 kg/cm²	5 kg/cm²	0 bar to 205 bar	50 bar	5 bar
0 psi to 5,000 psi	1000 psi	100 psi	0 kPa to 34,000 kPa	10,000 kPa	1,000 kPa	0 kg/cm² to 350 kg/cm²	100 kg/cm²	10 kg/cm²	0 bar to 340 bar	100 bar	10 bar
0 psi to 6,000 psi	1000 psi	100 psi	0 kPa to 41,000 kPa	10,000 kPa	1,000 kPa	0 kg/cm² to 420 kg/cm²	100 kg/cm²	10 kg/cm²	0 bar to 410 bar	100 bar	10 bar

Dial Indicating Gauge Accuracy/Standard Dial Configuration

Applies to:
800 Series Gauges

ACCURACY: ±0.25% full scale					
Primary Scale			Primary Scale		
Dial Range	Figure	Graduation	Dial Range	Figure	Graduation
0 psi to 30 psi	2 psi	0.1 psi	0 psi to 1,500 psi	100 psi	5 psi
0 psi to 60 psi	5 psi	0.2 psi	0 psi to 2,000 psi	200 psi	10 psi
0 psi to 100 psi	10 psi	0.5 psi	0 psi to 3,000 psi	250 psi	10 psi
0 psi to 160 psi	20 psi	0.8 psi	0 psi to 5,000 psi	500 psi	20 psi
0 psi to 200 psi	20 psi	1 psi	0 psi to 6,000 psi	500 psi	20 psi
0 psi to 300 psi	25 psi	1 psi			
0 psi to 400 psi	50 psi	2 psi			
0 psi to 600 psi	50 psi	2 psi			
0 psi to 1,000 psi	100 psi	5 psi			

PRESSURE & VACUUM CONVERSIONS

Pounds per Square Inch	bar	Kilopascals	Kilograms per Square Centimeter	Ounces per Square Inch	Inches of Mercury	Millimeters of Mercury	Inches of Water
psi	bar	kPa	kg/cm^2	oz/in^2	inHg	mmHg*	inH_2O
1	.0689476	6.89476	.0703069	16	2.03602	51.71485	27.6807
14.5038	1	100	1.019716	232.0608	29.530	750.0626	401.8596
.145038	.01	1	.0101972	2.320608	.295299	7.500610	401.8596
14.2233	.9806649	98.06649	1	227.5739	28.95901	735.5588	393.7118
.0625	.0043092	.4309223	.0043942	1	.1272513	3.23218	1.73004
.4911542	.0338639	3.386389	.0345316	7.85847	1	25.4	13.59548
.0193368	.0013332	.1333225	.0013595	.3093888	.0393701	1	.535255
.0361263	.0024908	.2490819	.0025422	.578020	.0735539	1.868268	1

* 1 kPa = 1 kN/m2, 1 mmHg = 1 Torr, $1Kg/cm^2 = 1 kp/cm^2$
(Conversions of: H_2O are at 39.2 °F (4 °C): Hg are at 32 °F (0 °C)

CONVERSIONS FOR HYDRAULIC RAM CAPACITY

psi x AREA = (LBS.) FORCE

$$\text{TONS} = \frac{\text{psi} \times .7854 \times D2}{2000}$$

$$\text{psi} = \frac{\text{TONS}}{D2 \times .0003927}$$

For further assistance with conversions please consult the factory.

General Purpose Digital Gauge



PGE20 SERIES

- Rugged, electronic gauge
- Gauge, compound, absolute and vacuum ranges from 5 psig to 15,000 psig
- 4-½ digit display with 0 to 100% bar graph
- 316L Stainless Steel wetted parts

APPLICATIONS

- Hydraulics & pneumatics
- Leak detection
- Water management
- Hydrostatic pressure testing
- Burst testing
- Setting pressure switch set points

MENU FUNCTIONS

- Min/Max Alarm (visual)
- Power off function
- Tare offset
- Battery status display
- Backlighting
- Optional data logger

SPECIFICATIONS

Pressure ranges	Gauge, compound, absolute and vacuum ranges from 5 psig to 15,000 psig
Accuracy	±0.50% of full scale, including non-linearity, hysteresis, zero offset, and end point deviation per IEC 61298-2
Temperature ranges	Media -4 °F to 122 °F (-20 °C to 50 °C) Operating 14 °F to 122 °F (-10 °C to 50 °C) Storage 0 °F to 130 °F (-18 °C to 55 °C)
Measuring element	316L Stainless Steel
Connection	1/4" NPT Male, 316L Stainless Steel
Case	PBT with 30% glass fiber
Display	Resolution: 4-1/2 digits Back-lighting: activated via button Bar graph: 0 to 100% in 5% steps
Power requirement	3 x 1.5 V AA Alkaline batteries Typically > 4,000 hours
Response time	200 ms
Proof pressure	≤ 70 psi: 3 times full scale ≥ 100 to 7,500 psi: 2 times full scale > 7,500 psi: 1.43 times full scale
Burst pressure	≤ 70 psi: 4 times full scale ≥ 100 to 7,500 psi: 3 times full scale > 7,500 psi: 2 times full scale
Programmable functions **Measuring units**	Adjustable through front key pad psi, bar, mbar, MPa, kg/cm2 and 1 user defined unit
Environmental rating	IP65
Weight	0.77 lb., including batteries

⚠ **WARNING:** This product can expose you to chemicals including Lead and Nickel, which are known to the State of California to cause cancer and birth defects or other reproductive harm. For more information go to www.P65Warnings.ca.gov

Adaptive Industrial Solutions | sales@adaptiveind.com | (877) 818-5009

ORDERING INFORMATION									
SERIES	**PGE20**								
PRESSURE RANGES	**15psiv**	-15 psig to 0 psig	**70psig**	0 psig to 70 psig	**1500psig**	0 psig to 1,500 psig	**5psia**	0 psia to 5 psia	
	15psic	-15 psig to 15 psig	**100psig**	0 psig to 100 psig	**2000psig**	0 psig to 2,000 psig	**15psia**	0 psia to 15 psia	
	160psic	-15 psig to 160 psig	**150psig**	0 psig to 150 psig	**3000psig**	0 psig to 3,000 psig	**30psia**	0 psia to 30 psia	
	200psic	-15 psig to 200 psig	**200psig**	0 psig to 200 psig	**4000psig**	0 psig to 4,000 psig	**70psia**	0 psia to 70 psia	
	300psic	-15 psig to 300 psig	**300psig**	0 psig to 300 psig	**5000psig**	0 psig to 5,000 psig	**120psia**	0 psia to 120 psia	
	600psic	-15 psig to 600 psig	**400psig**	0 psig to 400 psig	**6000psig**	0 psig to 6,000 psig	**150psia**	0 psia to 150 psia	
	5psig	0 psig to 5 psig	**500psig**	0 psig to 500 psig	**7500psig**	0 psig to 7,500 psig	**300psia**	0 psia to 300 psia	
	10psig	0 psig to 10 psig	**600psig**	0 psig to 600 psig	**10000psig**	0 psig to 10,000 psig	**500psia**	0 psia to 500 psia	
	15psig	0 psig to 15 psig	**750psig**	0 psig to 750 psig	**15000psig**	0 psig to 15,000 psig			
	30psig	0 psig to 30 psig	**1000psig**	0 psig to 1,000 psig					
	psiv = vacuum gauge		psic = compound pressure		psig = gauge pressure		psia = absolute pressure		Other ranges available on request
ACCURACIES	**1**	±0.5% Full Scale	**2**	±0.25% Full Scale*					
PROCESS CONNECTION	**2**	1/4" NPT male							
OPTIONS	**DL**	Integrated Data Logger	**RCP**	Rubber Case Protector	**ST8**	SS Threaded Orifice			

Please consult your local NOSHOK Distributor or NOSHOK, Inc. for availability and delivery information.

* Includes additional units of measure, level, density and delay.

ORDERING INFORMATION - UNINSTALLED OPTIONS							
OPTIONS	**CC**	Certified Calibration	**PGE20-IC**	Interface Cable (Micro USB to USB cable 6 ft.)	**PGE20-GC3**	Gauge Carrying Case (3 gauge)	
	PGE20-DL	Field Activated Data Logger	**PGE20-GC1**	Gauge Carrying Case (1 gauge)			

Please consult your local NOSHOK Distributor or NOSHOK, Inc. for availability and delivery information.

EXAMPLE

PGE20 – 1500psig – 1 – 2 – DL

Series ..... PGE20 Series
Pressure range ..... 0 psig to 1,500 psig
Accuracy ..... ±0.5% Full Scale
Process connection ..... 1/4" NPT Male
Options ..... Integrated Data Logger

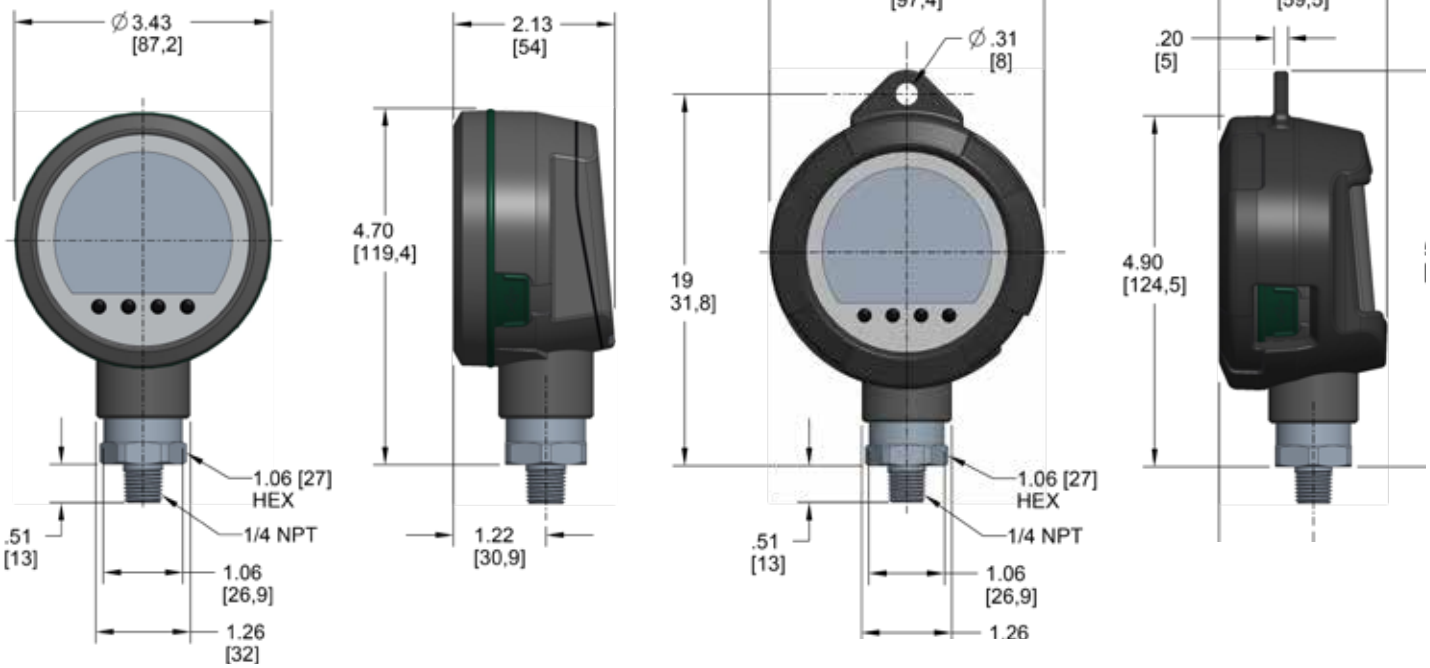



PT10 SERIES

- Gauge, compound, absolute and vacuum ranges from 2 psig to 15,000 psig
- Compact size
- Current and voltage outputs available
- 316 Stainless Steel wetted parts
- RoHS compliant
- Built to CE standards to suppress RFI, EMI and ESD

APPLICATIONS

- Hydraulics & pneumatics
- Automotive
- Pumps & compressors
- Refrigeration controls
- Mobile equipment
- General industrial

PROCESS CONNECTIONS

- 1/8 NPT
- 1/4 NPT
- 1/2 NPT
- 7/16-20 Female Schrader
- 7/16-20 Male SAE -4
- 9/16-18 Male SAE -6
- G 1/4 A Male ISO 1179-2

other options available, consult factory

ELECTRICAL CONNECTIONS

- 4-pin Bayonet
- 6-pin Bayonet
- 4-pin M12
- 3-pin Packard
- 2-pin Deutsch
- 3-pin Deutsch
- 4-pin Deutsch
- DIN form A
- DIN form C
- Integral Cable

other options available, consult factory

SPECIFICATIONS

Output signals	4 mA to 20 mA, 2-wire; 0 Vdc to 5 Vdc, 3-wire; 1 Vdc to 5 Vdc, 3-wire; 0 Vdc to 10 Vdc, 3-wire; 0.5 to 4.5 Vdc, 3-wire; 0.5 to 4.5 Vdc ratiometric, 3-wire	
Pressure ranges	Gauge, compound, absolute and vacuum ranges from 2 psi to 15,000 psi	
Accuracy*	±0.50% of span, non-linearity best fit straight line per IEC 61298-2 at reference conditions	
Response time	< 1 ms	
Service life	> 10 million load cycles	
Temperature ranges*	Compensated: Media: Ambient: Storage:	-4 °F to 185 °F (-20 °C to 85 °C) -22 °F to 221°F (-30 °C to 105 °C) -4 °F to 185°F (-20 °C to 85 °C) -40 °F to 257 °F (-40 °C to 125 °C)
Power requirement*	12 Vdc to 36 Vdc: 4.5 Vdc to 5.5 Vdc:	4 mA to 20 mA, 2-wire 0 Vdc to 5 Vdc, 3-wire 1 Vdc to 5 Vdc, 3-wire 0 Vdc to 10 Vdc, 3-wire 0.5 to 4.5 Vdc non-ratiometric, 3-wire 0.5 to 4.5 Vdc ratiometric, 3-wire
Proof pressure	< 7,500 psi: 7,500 – 10,000 psi: > 10,000 psi:	2 times full scale 1.5 times full scale 1.2 times full scale
Burst pressure	< 7,500 psi: 7,500 – 10,000 psi: > 10,000 psi:	3 times full scale 2 times full scale 1.5 times full scale
Measuring element	316 Stainless Steel	
Process connection	316 Stainless Steel	
Electrical connection	Stainless Steel and Glass Filled PA	
Housing material	304 Stainless Steel	
Environmental rating	IP65: DIN EN 175301-803 Form A, DIN EN 175301-803 Form C IP67: 4-pin Bayonet, 6-pin Bayonet, Packard, M12 x 1 (4-pin), Deutsch IP68: Integral cable (gauge reference devices <400 psi are IP67)	
Electromagnetic rating	Immunity per IEC 61000-6-2 Radiation per IEC 61000-6-3	
Electrical protection	Reverse polarity and short circuit protection	
Shock	200 g's according to IEC 60068-2-27	
Vibration	20 g's according to IEC 60068-2-6	
Weight	Approximately 4.5 oz.	

* See user manual for detailed specifications

WARNING: This product can expose you to chemicals including Lead and Nickel, which are known to the State of California to cause cancer and birth defects or other reproductive harm. For more information go to www.P65Warnings.ca.gov

ORDERING INFORMATION	
SERIES	PT10
Please consult your local NOSHOK Distributor or NOSHOK, Inc. for part number configuration.	

PT10 Process Connections



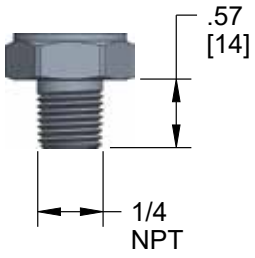

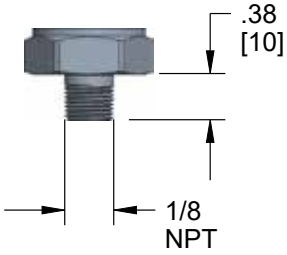

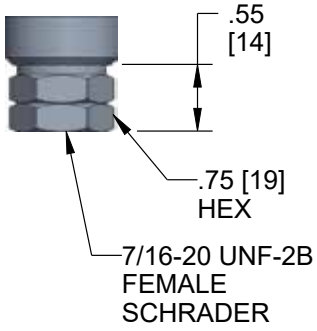

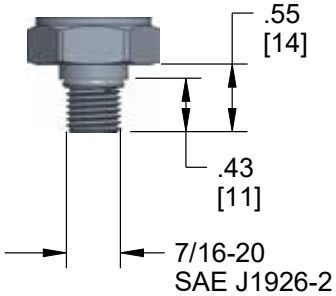

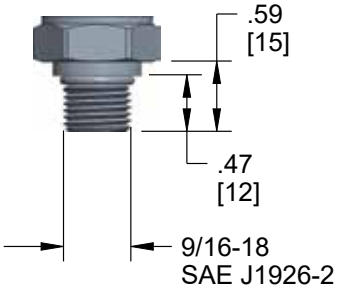

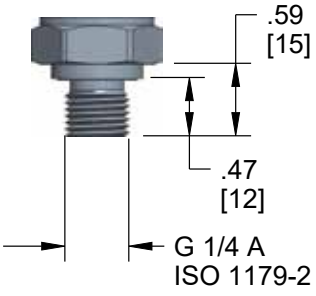

General Purpose Fixed Range



APPLICATIONS

- HVAC
- Hydraulics & pneumatics
- General industrial
- Automation

PT20 SERIES

- Gauge, compound, absolute and vacuum ranges from 1 psig to 15,000 psig
- Current and voltage outputs available
- 316 and 13-8PH Stainless Steel wetted parts
- RoHS compliant
- CE compliant to suppress RFI, EMI and ESD
- cULus compliant

SPECIFICATIONS

Output signals	4 mA to 20 mA, 2-wire; 0 Vdc to 5 Vdc, 3-wire; 1 Vdc to 5 Vdc, 3-wire; 0 Vdc to 10 Vdc, 3-wire; 0.5 to 4.5 Vdc, 3-wire; 0.5 to 4.5 Vdc ratiometric, 3-wire	
Pressure ranges	Gauge, compound, absolute and vacuum ranges from 1 psi to 15,000 psi	
Accuracy*	±0.50% of span, non-linearity best fit straight line per IEC 61298-2 at reference conditions	
Response time	≤ 4 ms (between 10% and 90% full scale)	
Service life	> 100 million load cycles	
Temperature ranges*	Compensated: Media: Ambient: Storage:	32 °F to 176 °F (0 °C to 80 °C) -22 °F to 212 °F (-30 °C to 100 °C) -22 °F to 212 °F (-30 °C to 100 °C) -40 °F to 158 °F (-40 °C to 70 °C)
Power requirement*	8 Vdc to 30 Vdc: 14 Vdc to 30 Vdc: 4.5 Vdc to 5.5 Vdc:	4 mA to 20 mA, 2-wire 0 Vdc to 5 Vdc, 3-wire 1 Vdc to 5 Vdc, 3-wire 0.5 Vdc to 4.5 Vdc, 3-wire 0 Vdc to 10 Vdc, 3-wire 0.5 Vdc to 4.5 Vdc ratiometric, 3-wire
Proof pressure	< 7,500 psi: ≥ 7,500 psi:	2 times full scale 1.5 times full scale
Burst pressure	< 7,500 psi: ≥ 7,500 psi:	3 times full scale 2 times full scale
Measuring element	316 Stainless Steel: 13-8PH Stainless Steel:	Vacuum to 150 psi ≥ 150 psi
Process connection	316 Stainless Steel	
Electrical connection	PA and PBT	
Housing material	316 Stainless Steel	
Environmental rating	IP65: DIN EN 175301-803 Form A, DIN EN 175301-803 Form C IP67: M12 x 1 (4-pin)	
Electromagnetic rating	CE compliant to EMC norm EN 61326:2014/A1:1998 RFI, EMI and ESD protection	
Electrical protection	Reverse polarity, over-voltage and short circuit protection	
Shock	500 g's according to IEC 60068-2-27	
Vibration	10 g's according to IEC 60068-2-6	
Weight	Approximately 2.8 oz.	

* See user manual for detailed specifications

⚠ **WARNING:** This product can expose you to chemicals including Lead and Nickel, which are known to the State of California to cause cancer and birth defects or other reproductive harm. For more information go to www.P65Warnings.ca.gov

ORDERING INFORMATION

SERIES	**PT20**							
PRESSURE RANGES	**15psiv**	-15 psig to 0 psig	**5psig**	0 psig to 5 psig	**750psig**	0 psig to 750 psig	**15000psig**	0 psig to 15,000 psig
	15psic	-15 psig to 15 psig	**15psig**	0 psig to 15 psig	**1000psig**	0 psig to 1,000 psig	**15psia**	0 psia to 15 psia
	30psic	-15 psig to 30 psig	**30psig**	0 psig to 30 psig	**1500psig**	0 psig to 1,500 psig	**30psia**	0 psia to 30 psia
	60 psic	-15 psig to 60 psig	**60psig**	0 psig to 60 psig	**2000psig**	0 psig to 2,000 psig	**60psia**	0 psia to 60 psia
	100psic	-15 psig to 100 psig	**100psig**	0 psig to 100 psig	**3000psig**	0 psig to 3,000 psig	**100psia**	0 psia to 100 psia
	160psic	-15 psig to 160 psig	**150psig**	0 psig to 150 psig	**5000psig**	0 psig to 5,000 psig	**150psia**	0 psia to 150 psia
	200psic	-15 psig to 200 psig	**200psig**	0 psig to 200 psig	**6000psig**	0 psig to 6,000 psig	**200psia**	0 psia to 200 psia
	300psic	-15 psig to 300 psig	**300psig**	0 psig to 300 psig	**7500psig**	0 psig to 7,500 psig	**300psia**	0 psia to 300 psia
	1psig	0 psig to 1 psig	**500psig**	0 psig to 500 psig	**10000psig**	0 psig to 10,000 psig		
	psiv = vacuum gauge pressure	psic = compound gauge pressure	psig = gauge pressure	psia = absolute pressure	Other ranges available upon request.			
ACCURACY	**1**	±0.50% (of span, non-linearity, BFSL per IEC 61298-2 at reference conditions)						
OUTPUT SIGNALS	**1**	4 mA to 20 mA, 2-wire	**5**	0 Vdc to 10 Vdc, 3-wire				
	2	0 Vdc to 5 Vdc, 3-wire	**13**	0.5 Vdc to 4.5 Vdc, 3-wire (ratiometric)				
	3	1 Vdc to 5 Vdc, 3-wire	**31**	0.5 Vdc to 4.5 Vdc, 3-wire (non-ratiometric)				
PROCESS CONNECTIONS	**1**	1/8" NPT male	**8**	1/2" NPT male	**45**	7/16-20 SAE J514 FIG 34B (Non-Adjustable)		
	2	1/4" NPT male	**10**	G 1/4 B EN 837	**83**	G 1/2 B EN 837		
ELECTRICAL CONNECTIONS	**7**	DIN EN 175301-803 Form C	**17**	DIN EN 175301-803 Form C w/ 3 ft. cable				
	8	DIN EN 175301-803 Form A	**18**	DIN EN 175301-803 Form A w/ 3 ft. cable				
	14	DIN EN 175301-803 Form A w/ 1/2" NPT female conduit	**25**	M12 x 1 (4-pin)				
OPTION	**ST8**	Threaded Orifice (0.8 mm)						

Please consult your local NOSHOK Distributor or NOSHOK, Inc. for availability and delivery information.

EXAMPLE **PT20 – 500psig – 1 – 1 – 2 – 8 – ST8**

Series ..... PT20 Series
Pressure range ..... 0 psig to 500 psig
Accuracy ..... ±0.5% of span (BFSL)
Output signal ..... 4 mA to 20 mA, 2-wire
Process connection ..... 1/4" NPT Male
Electrical connection ..... DIN EN 175301-803 Form A
Option ..... Threaded Orifice

Dimensions

PT20 (DIN EN 175301-803 Form C)

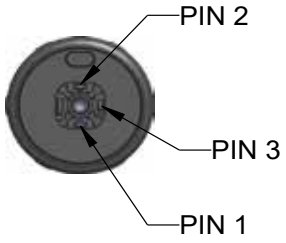

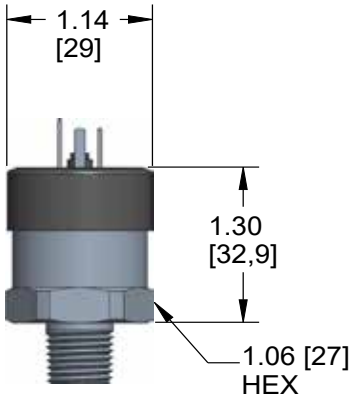

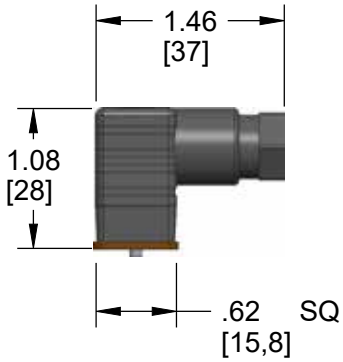

DIN Form C (PT20-7)

PT20 (DIN EN 175301-803 Form A)

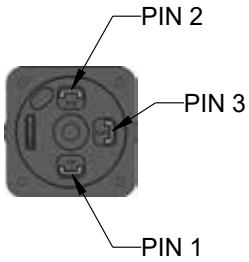

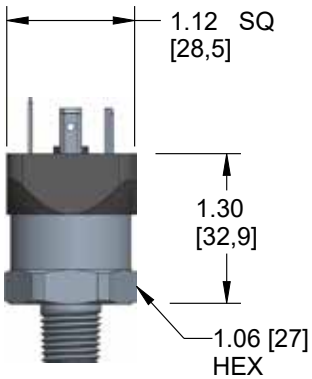

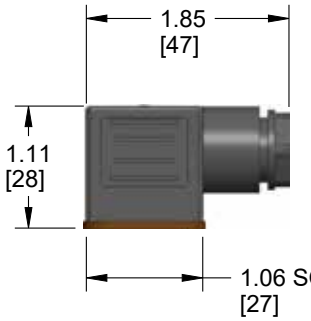

DIN Form A (PT20-8)

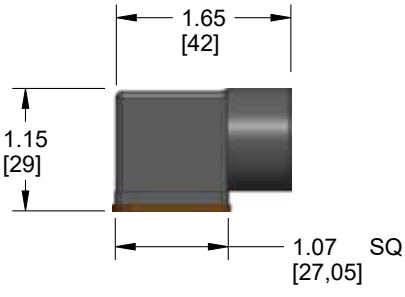

DIN Form A 1/2 NPT Conduit
(PT20-14)

PT20-25 (M12 x 1 4-pin)

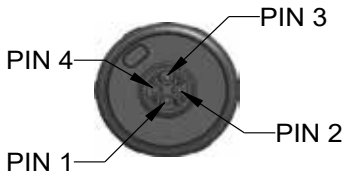

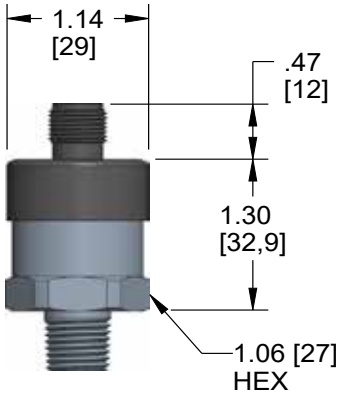

PT20 Process Connections

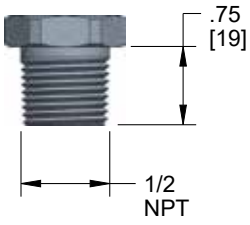

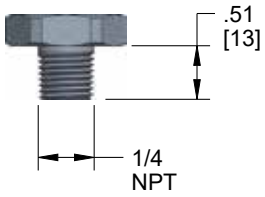

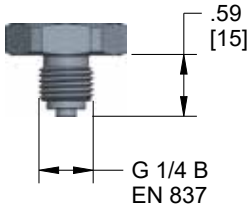

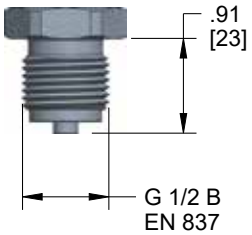

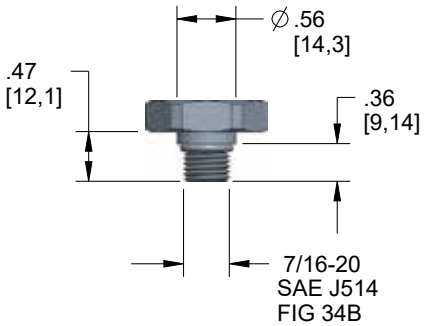

High Performance Fixed Range

PT30 SERIES



- Gauge, compound, absolute and vacuum ranges from 2 psig to 15,000 psig
- Compact size
- Current and voltage outputs available
- 316 Stainless Steel wetted parts
- RoHS compliant
- Built to CE standards to suppress RFI, EMI and ESD
- Optional front flush process connections available

APPLICATIONS

- Hydraulics & pneumatics
- Automotive
- Pumps & compressors
- Refrigeration controls
- Mobile equipment
- General industrial

FRONT FLUSH APPLICATIONS

- Adhesives/Resins
- Wastewater
- High-Viscosity Fluids
- Slurries/Sludge



Optional front flush process connections available

SPECIFICATIONS

Output signals	4 mA to 20 mA, 2-wire; 0 Vdc to 5 Vdc, 3-wire; 1 Vdc to 5 Vdc, 3-wire; 0 Vdc to 10 Vdc, 3-wire; 0.5 to 4.5 Vdc, 3-wire; 0.5 to 4.5 Vdc ratiometric, 3-wire	
Pressure ranges	Gauge, compound, absolute and vacuum ranges from 2 psi to 15,000 psi	
Accuracy*	±0.25% of span, non-linearity best fit straight line per IEC 61298-2 at reference conditions	
Response time	< 1 ms	
Service life	> 10 million load cycles	
Temperature ranges*	Compensated : Media: Media with 3 Fin: Ambient: Storage:	-4 °F to 185 °F (-20 °C to 85 °C) -22 °F to 221 °F (-30 °C to 105 °C) -22 °F to 302 °F (-30 °C to 150 °C) -4 °F to 185°F (-20 °C to 85 °C) -40 °F to 257 °F (-40 °C to 125 °C)
Power requirement*	10 Vdc to 35 Vdc: 8 Vdc to 35 Vdc: 12 Vdc to 35 Vdc: 4.5 Vdc to 5.5 Vdc:	4 mA to 20 mA, 2-wire 0 Vdc to 5 Vdc, 3-wire 1 Vdc to 5 Vdc, 3-wire 0.5 to 4.5 Vdc non-ratiometric, 3-wire 0 Vdc to 10 Vdc, 3-wire 0.5 to 4.5 Vdc ratiometric, 3-wire
Proof pressure	< 7,500 psi: 7,500 – 10,000 psi: > 10,000 psi:	2 times full scale 1.5 times full scale 1.2 times full scale
Burst pressure	< 7,500 psi: 7,500 – 10,000 psi: > 10,000 psi:	3 times full scale 2 times full scale 1.5 times full scale
Measuring element	316 Stainless Steel	
Process connection	316 Stainless Steel	
Electrical connection	Stainless Steel and Glass Filled PA	
Housing material	304 Stainless Steel	
Environmental rating	IP65: DIN EN 175301-803 Form A, DIN EN 175301-803 Form C IP67: 4-pin Bayonet, 6-pin Bayonet, Packard, M12 x 1 (4-pin), Deutsch IP68: Integral cable (gauge reference devices < 400 psi are IP67)	
Electromagnetic rating	Immunity per IEC 61000-6-2 Radiation per IEC 61000-6-3	
Electrical protection	Reverse polarity and short circuit protection	
Shock	200 g's according to IEC 60068-2-27	
Vibration	20 g's according to IEC 60068-2-6	
Weight	Approximately 4.5 oz.	

* See user manual for detailed specifications

⚠ **WARNING:** This product can expose you to chemicals including Lead and Nickel, which are known to the State of California to cause cancer and birth defects or other reproductive harm. For more information go to www.P65Warnings.ca.gov

ORDERING INFORMATION

SERIES	**PT30**						
PRESSURE RANGES	**15psiv**	-15 psig to 0 psig	**15psig**	0 psig to 15 psig	**1000psig**	0 psig to 1,000 psig	**15psia**	0 psia to 15 psia
	15psic	-15 psig to 15 psig	**30psig**	0 psig to 30 psig	**1500psig**	0 psig to 1,500 psig	**30psia**	0 psia to 30 psia
	30psic	-15 psig to 30 psig	**60psig**	0 psig to 60 psig	**2000psig**	0 psig to 2,000 psig	**60psia**	0 psia to 60 psia
	60psic	-15 psig to 60 psig	**100psig**	0 psig to 100 psig	**3000psig**	0 psig to 3,000 psig	**100psia**	0 psia to 100 psia
	100psic	-15 psig to 100 psig	**150psig**	0 psig to 150 psig	**4000psig**	0 psig to 4,000 psig	**150psia**	0 psia to 150 psia
	200psic	-15 psig to 200 psig	**200psig**	0 psig to 200 psig	**5000psig**	0 psig to 5,000 psig	**200psia**	0 psia to 200 psia
	300psic	-15 psig to 300 psig	**300psig**	0 psig to 300 psig	**6000psig**	0 psig to 6,000 psig	**300psia**	0 psia to 300 psia
	2psig	0 psig to 2 psig	**500psig**	0 psig to 500 psig	**7500psig**	0 psig to 7,500 psig		
	5psig	0 psig to 5 psig	**600psig**	0 psig to 600 psig	**10000psig**	0 psig to 10,000 psig		
	10psig	0 psig to 10 psig	**750psig**	0 psig to 750 psig	**15000psig**	0 psig to 15,000 psig		
	psiv = vacuum gauge pressure psic = compound gauge pressure psig = gauge pressure psia = absolute pressure Other ranges available upon request.							
ACCURACY	**1**	±0.25% (of span, non-linearity, BFSL per IEC 61298-2 at reference conditions)						
OUTPUT SIGNALS	**1**	4 mA to 20 mA, 2-wire	**3**	1 Vdc to 5 Vdc, 3-wire	**13**	0.5 Vdc to 4.5 Vdc, 3-wire (ratiometric)		
	2	0 Vdc to 5 Vdc, 3-wire	**5**	0 Vdc to 10 Vdc, 3-wire	**31**	0.5 Vdc to 4.5 Vdc, 3-wire (non-ratiometric)		
PROCESS CONNECTIONS	**1**	1/8″ NPT Male	**24**	7/16-20 Female Schrader*	**71**	G1/2 Male ISO 1179-2 Front Flush*		
	2	1/4″ NPT Male	**46**	G 1/4 A Male ISO 1179-2	**72**	9/16-18 Male SAE -6 (J1926-2)		
	8	1/2″ NPT Male	**50**	7/16-20 Male SAE -4 (J1926-2)	**82**	1/2" NPT Male Front Flush*		
ELECTRICAL CONNECTIONS	**2**	4-pin Bayonet	**17**	DIN EN 175301-803 Form C w/ 3 ft. cable	**46**	Deutsch Integral 3-Pin (DT04-3P)		
	3	6-pin Bayonet	**18**	DIN EN 175301-803 Form A w/ 3 ft. cable	**66**	Deutsch Integral 2-Pin (DT04-2P)		
	7	DIN EN 175301-803 Form C	**21**	Deutsch Integral 4-Pin (DT04-4P)	**70**	DIN EN 175301-803 Form C w/o mating connector		
	8	DIN EN 175301-803 Form A	**25**	M12 x 1 (4-pin)	**80**	DIN EN 175301-803 Form A w/o mating connector		
	14	DIN EN 175301-803 Form A w/ 1/2" NPT female conduit	**34**	Packard 3-Pin				
			36	3 ft. Integral cable				
OPTION	**ST8**	Threaded Orifice (0.8 mm)	**3F**	Integrated 3 Fin Cooling Element**				

Please consult your local NOSHOK Distributor or NOSHOK, Inc. for availability and delivery information.

* Limited to pressure ranges 1,500 psi and below
** -71 and -82 Front Flush Process connections only

EXAMPLE

PT30 – 500psig – 1 – 1 – 2 – 66

Series ..... PT30 Series
Pressure range ..... 0 psig to 500 psig
Accuracy ..... ±0.25% of span (BFSL)
Output signal ..... 4 mA to 20 mA, 2-wire
Process connection ..... 1/4" NPT Male
Electrical connection ..... Deutsch Integral 2-Pin (DT04-2P)

Dimensions

PT30-2 (4-Pin Bayonet)

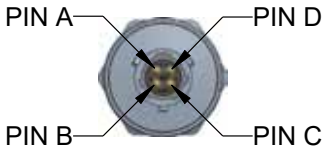



PT30-3 (6-Pin Bayonet)

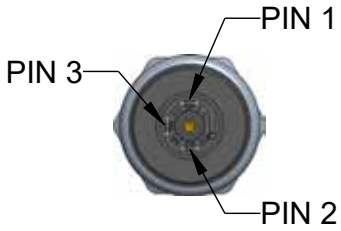

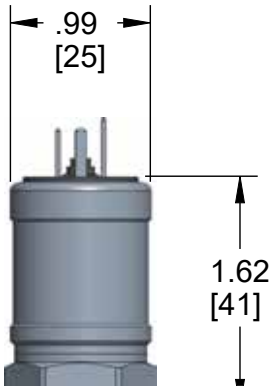

PT30 (DIN EN 175301-803 Form C)



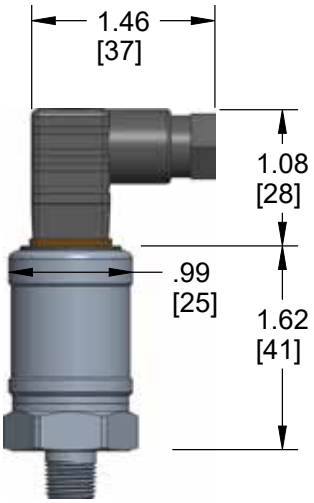

DIN Form C (PT30-7)

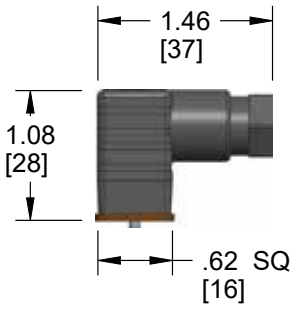

DIN Form C

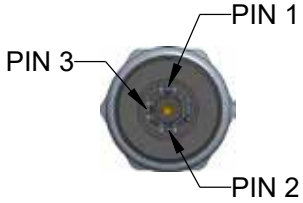

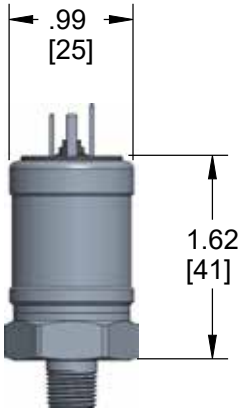

DIN Form C w/o mating connector (PT30-70)

PT30 (DIN EN 175301-803 Form A)

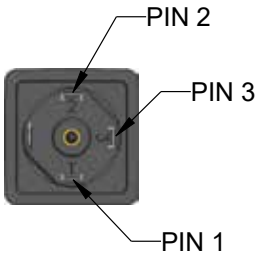

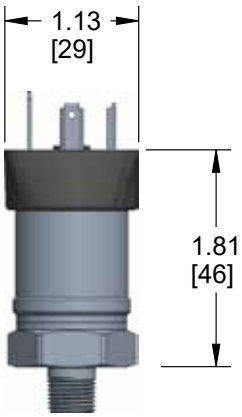

DIN Form A w/o mating connector (PT30-80)

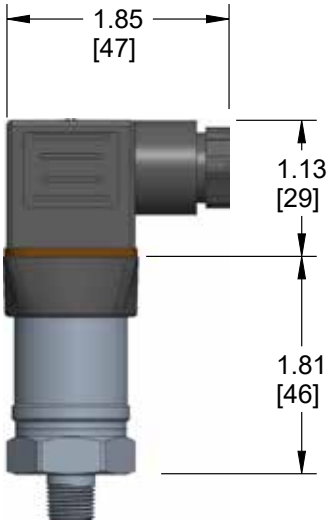

DIN Form A (PT30-8)

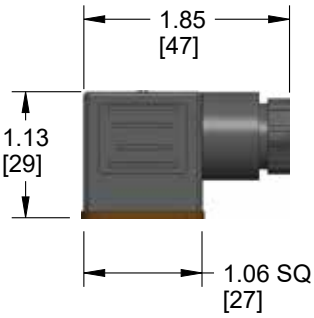

DIN Form A (PT30-8)

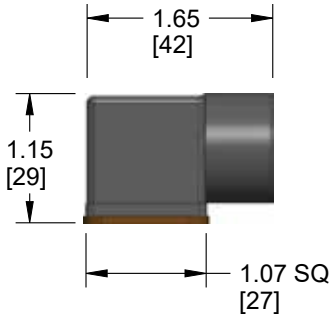

DIN FORM A w/ 1/2" NPT female conduit (PT30-14)

PT30-21 (Deutsch Integral 4-Pin DT04-4P)



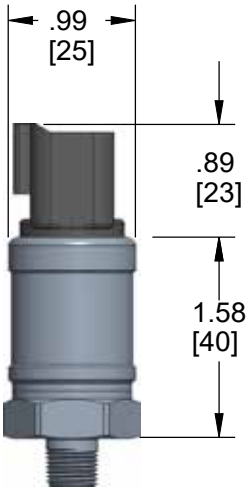

PT30-25 (M12 x 1 4-pin)

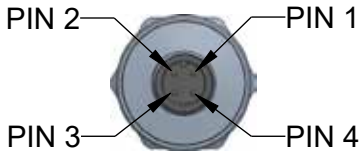

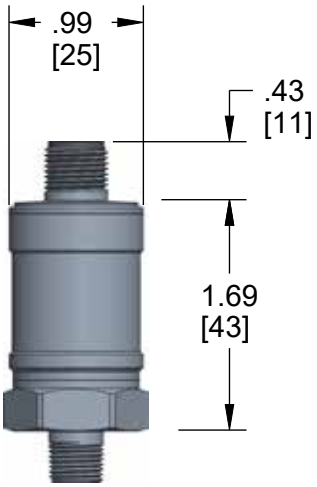

Dimensions

PT30-34 (Packard 3-Pin)

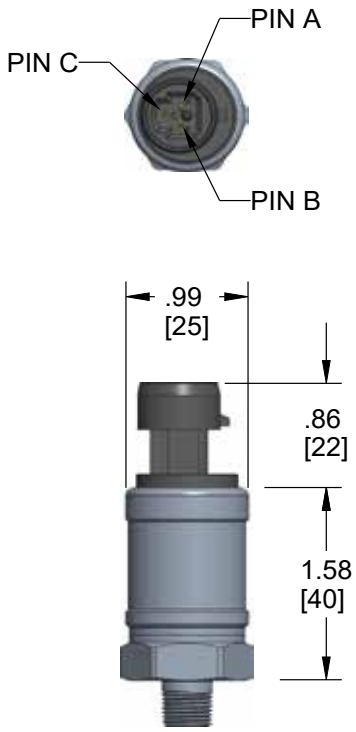

PT30-36 (3 ft. Integral Cable)

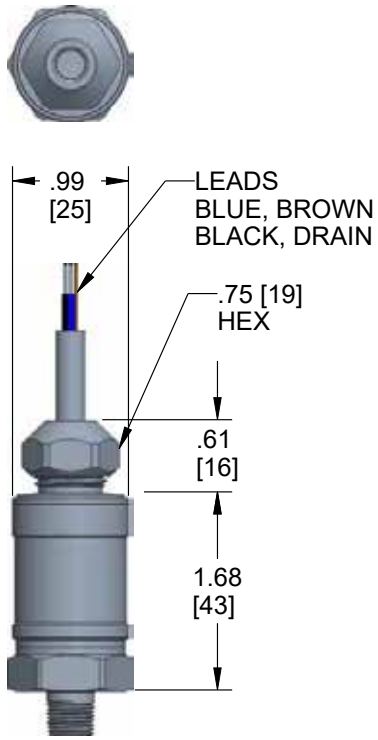

PT30-46 (Deutsch Integral 3-Pin DT04-3P)

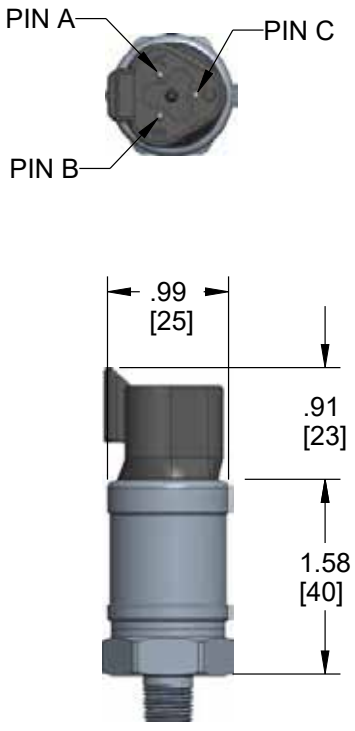

PT30-66 (Deutsch Integral 2-Pin DT04-2P)

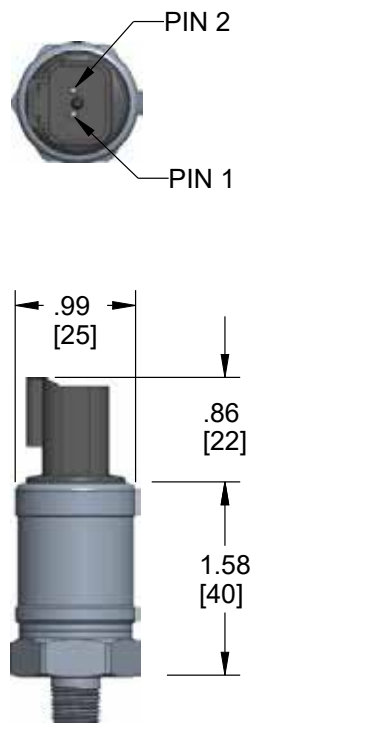

PT30 Process Connections

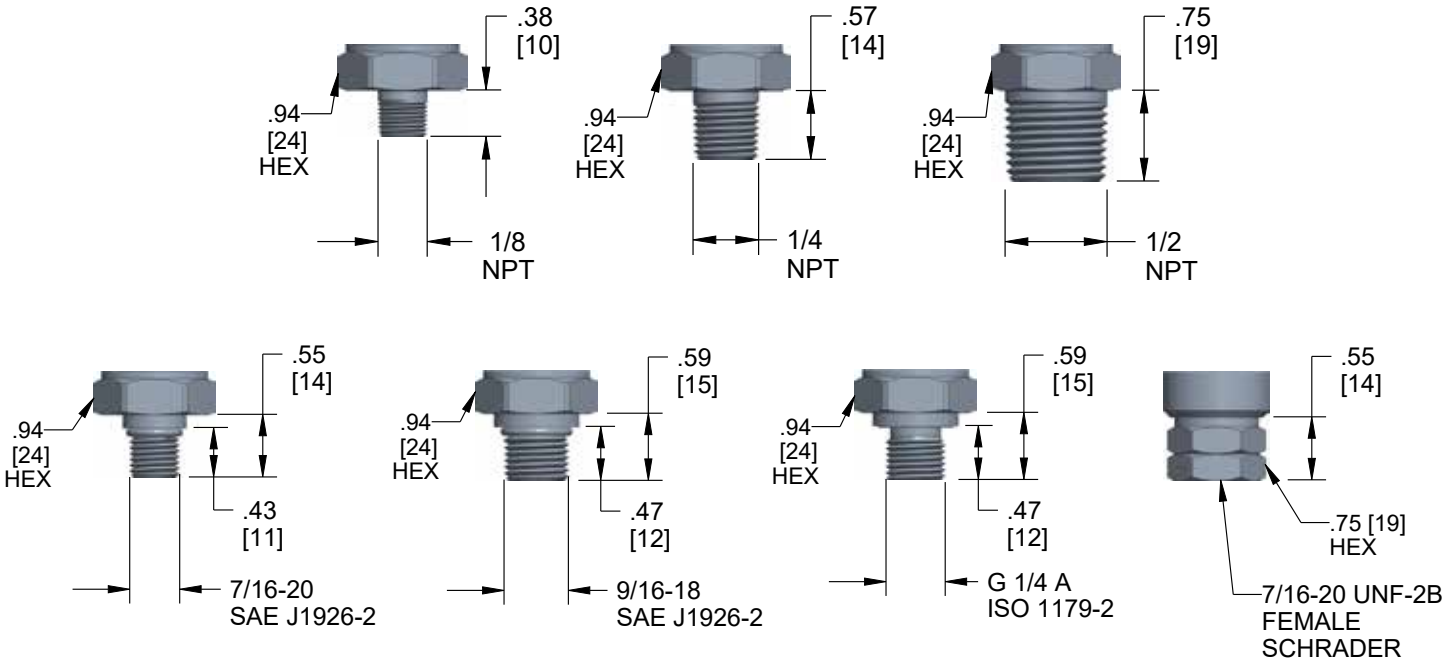

PT30 Integrated 3 Fin Cooling Element

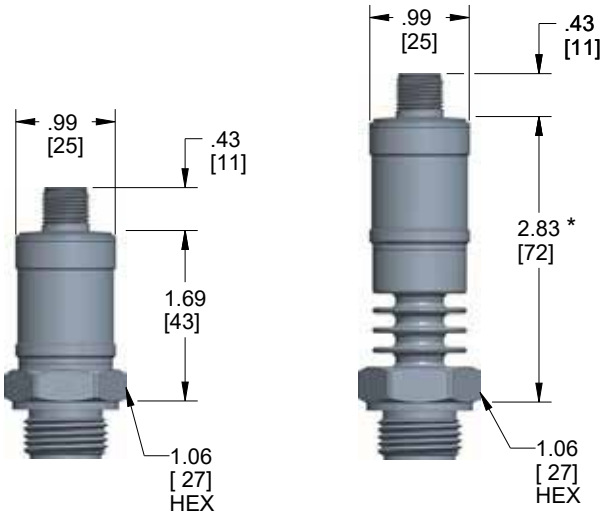

* Hex to electrical connection dimension increases by 1.14 [29] with cooling element option

Applies to all electrical connections. See M12 example

High Accuracy Fixed Range



PT40 SERIES

- Gauge, compound, absolute and vacuum ranges from 2 psig to 15,000 psig
- Premium accuracy
- Current and voltage outputs available
- 316 and 13-8PH Stainless Steel wetted parts
- Field adjustable offset and span
- CE compliant to suppress RFI, EMI and ESD
- RoHS compliant

APPLICATIONS

- Hydraulics & pneumatics
- Laboratory & test equipment
- Power generation
- Automation
- Mobile equipment
- General industrial

SPECIFICATIONS

Output signals	4 mA to 20 mA, 2-wire; 0 Vdc to 5 Vdc, 0 Vdc to 10 Vdc, 1 Vdc to 5 Vdc,3-wire	
Pressure ranges	Gauge, compound, absolute and vacuum ranges from 2 psi to 15,000 psi	
Accuracy*	±0.25% of span, optional ±0.125% of span, non-linearity best fit straight line per IEC 61298-2 at reference conditions	
Adjustment	± 10% full scale for zero and span	
Response time	Less than 1 ms (between 10% and 90% full scale)	
Service life	> 100 million load cycles	
Temperature ranges*	Compensated: Media: Ambient: Storage:	32 °F to 176 °F (0 °C to 80 °C) -22 °F to 212 °F (-30 °C to 100 °C) -22 °F to 185 °F (-30 °C to 85 °C) -40 °F to 212 °F (-40 °C to 100 °C)
Power requirement*	10 Vdc to 30 Vdc: 14 Vdc to 30 Vdc:	4 mA to 20 mA, 2-wire 1 Vdc to 5 Vdc, 3-wire, 0 Vdc to 5 Vdc, 3-wire 0 Vdc to 10 Vdc, 3-wire
Proof pressure	< 300 psi: 300 – 10,000 psi: > 10,000 psi:	3 times full scale 2 times full scale 1.5 times full scale
Burst pressure	< 300 psi: 300 – 10,000 psi: > 10,000 psi:	5 times full scale 4 times full scale 3 times full scale
Measuring element	316 Stainless Steel: 13-8PH Stainless Steel:	Vacuum through 300 psi ≥ 500 psi
Process connection	316 Stainless Steel	
Housing material	316 Stainless Steel	
Environmental rating	IP65: DIN EN 175301-803 Form C, DIN EN 175301-803 Form A IP67: 4-pin Bayonet, 6-pin Bayonet, 1/2" NPT conduit, M12 x 1 (4-pin), Integral cable	
Electromagnetic rating	CE compliant to EMC norm EN 61326:2014/A1:1998 RFI, EMI and ESD protection	
Electrical protection	Reverse polarity, overvoltage and short circuit protection	
Shock	1,000 g's according to IEC 60068-2-27	
Vibration	20 g's according to IEC 60068-2-6	
Weight	Approximately 7.5 oz.	

* See user manual for detailed specifications

WARNING: This product can expose you to chemicals including Lead and Nickel, which are known to the State of California to cause cancer and birth defects or other reproductive harm. For more information go to www.P65Warnings.ca.gov

Adaptive Industrial Solutions | sales@adaptiveind.com | (877) 818-5009

ORDERING INFORMATION

SERIES	**PT40**										
PRESSURE RANGES	**15psiv**	-15 psig to 0 psig	**3psig**	0 psig to 3 psig	**200psig**	0 psig to 200 psig	**3000psig**	0 psig to 3,000 psig	**30psia**	0 psia to 30 psia	
	15psic	-15 psig to 15 psig	**5psig**	0 psig to 5 psig	**300psig**	0 psig to 300 psig	**4000psig**	0 psig to 4,000 psig	**60psia**	0 psia to 60 psia	
	30psic	-15 psig to 30 psig	**10psig**	0 psig to 10 psig	**500psig**	0 psig to 500 psig	**5000psig**	0 psig to 5,000 psig	**100psia**	0 psia to 100 psia	
	60psic	-15 psig to 60 psig	**15psig**	0 psig to 15 psig	**600psig**	0 psig to 600 psig	**6000psig**	0 psig to 6,000 psig	**150psia**	0 psia to 150 psia	
	100psic	-15 psig to 100 psig	**30psig**	0 psig to 30 psig	**750psig**	0 psig to 750 psig	**7500psig**	0 psig to 7,500 psig	**200psia**	0 psia to 200 psia	
	200psic	-15 psig to 200 psig	**60psig**	0 psig to 60 psig	**1000psig**	0 psig to 1,000 psig	**10000psig**	0 psig to 10,000 psig	**300psia**	0 psia to 300 psia	
	300psic	-15 psig to 300 psig	**100psig**	0 psig to 100 psig	**1500psig**	0 psig to 1,500 psig	**15000psig**	0 psig to 15,000 psig			
	2psig	0 psig to 2 psig	**150psig**	0 psig to 150 psig	**2000psig**	0 psig to 2,000 psig	**15psia**	0 psia to 15 psia			
	psiv = vacuum gauge pressure psic = compound gauge pressure psig = gauge pressure psia = absolute pressure Other ranges available on request										
	Note: Front flush connection is available for pressure ranges up to 0 psig to 8,000 psig										
ACCURACIES	**1**	±0.25% (of span, non-linearity, BFSL per IEC 61298-2 at reference conditions)			**2**	±0.125% (of span, non-linearity, BFSL per IEC 61298-2 at reference conditions)					
OUTPUT SIGNALS	**1**	4 mA to 20 mA, 2-wire			**3**	1 Vdc to 5 Vdc, 3-wire					
	2	0 Vdc to 5 Vdc, 3-wire			**5**	0 Vdc to 10 Vdc, 3-wire					
PROCESS CONNECTIONS	**1**	1/8" NPT male			**9**	SAE J1926-1:7/16-20 female			**13**	G 1 B Front flush (For ranges with span <30 psi)	
	2	1/4" NPT male			**10**	G1/4B EN837			**45**	7/16-20 SAE J514 FIG 34B (Non-Adjustable)	
	8	1/2" NPT male			**11**	G 1/2B Front flush (For ranges with span ≥ 30 psi)			**83**	G 1/2 B EN837	
	Other connections available upon request										
ELECTRICAL CONNECTIONS	**2**	4-pin Bayonet			**14**	DIN EN 175301-803 Form A w/ 1/2" NPT female conduit			**25**	M12 x 1 (4-pin)	
	3	6-pin Bayonet			**16**	1/2" NPT conduit w/ 3 ft. cable			**36**	3 ft. Integral cable	
	7	DIN EN 175301-803 Form C			**17**	DIN EN 175301-803 Form C w/ 3 ft. cable			**70**	DIN EN 175301-803 Form C w/o mating connector	
	8	DIN EN 175301-803 Form A			**18**	DIN EN 175301-803 Form A w/ 3 ft. cable			**80**	DIN EN 175301-803 Form A w/o mating connector	
OPTION	**ST8**	SS Threaded Orifice (0.8 mm)									

Please consult your local NOSHOK Distributor or NOSHOK, Inc. for availability and delivery information.

EXAMPLE **PT40 – 15000psig – 1 – 1 – 8 – 7 – ST8**

Series ..... PT40 Series
Pressure range ..... 0 psig to 15,000 psig
Accuracy ..... ±0.25% of span (BFSL)
Output signal ..... 4 mA to 20 mA, 2-wire
Process connection ..... 1/2 NPT male
Electrical connection ..... DIN EN 175301-803 Form C
Option ..... SS Threaded orifice

UNINSTALLED OPTIONS

G1A-WELD-ON-ADAPTER	Weld on adapter for front flush only	**G1/2A-WELD-ON-ADAPTER**	Weld on adapter for front flush only

Dimensions

PT40-2 (4-Pin Bayonet)

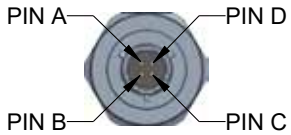

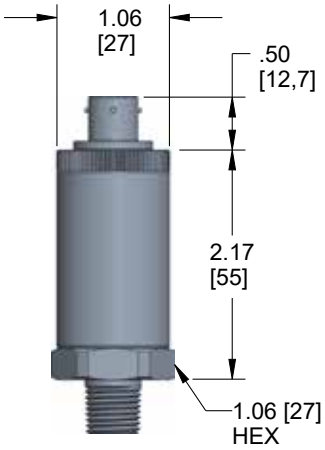

PT40-3 (6-Pin Bayonet)

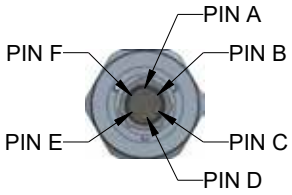

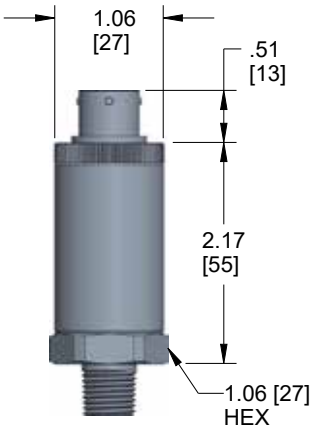

PT40 (DIN EN 175301-803 Form C)

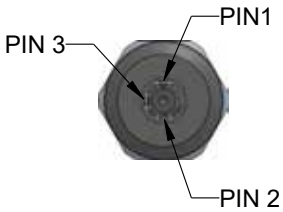

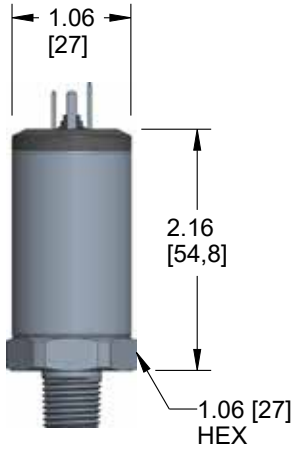

DIN Form C (PT40-70) w/o mating connection



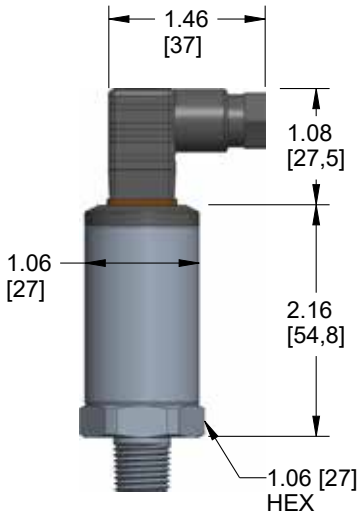

DIN Form C (PT40-7)

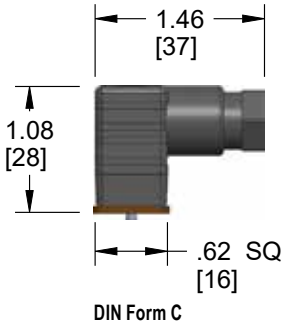

DIN Form C

PT40 (DIN EN 175301-803 Form A)

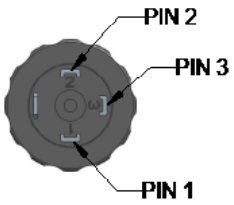

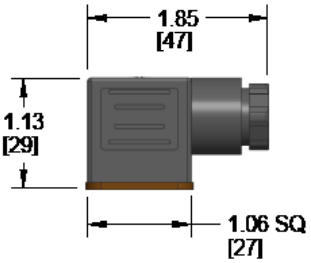

DIN Form A (PT40-8)

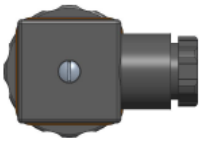

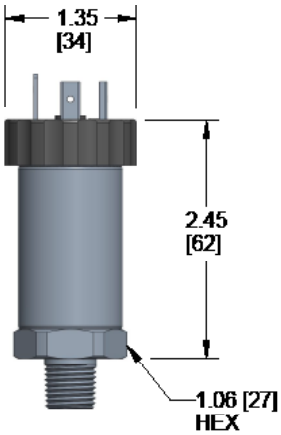

DIN Form A w/o mating connector (PT40-80)

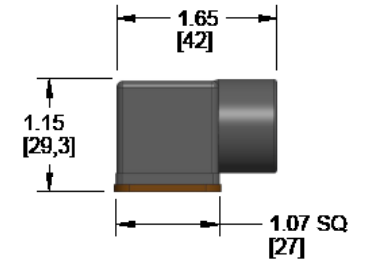

DIN FORM A w/ 1/2" NPT female conduit (PT40-14)

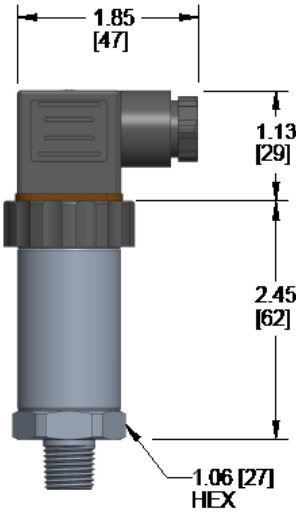

DIN Form A (PT40-8)

PT40-16 (1/2" NPT conduit w/ 3 ft. cable)

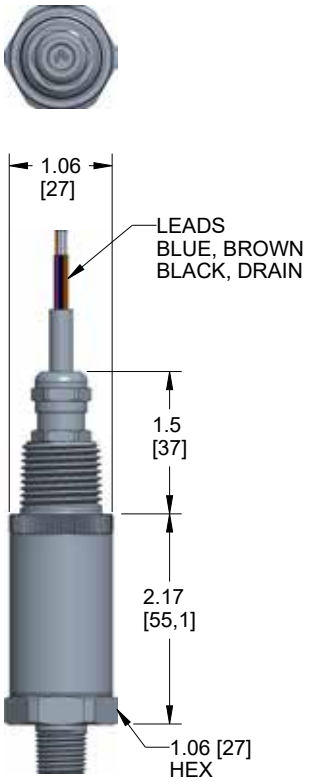

PT40-25 (M12 x 1 4-pin)

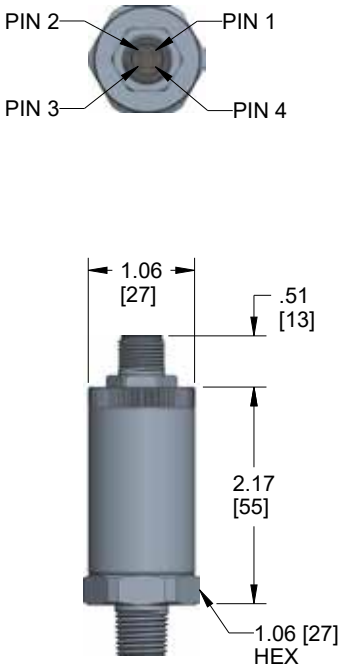

PT40-36 (3 ft. Integral Cable)

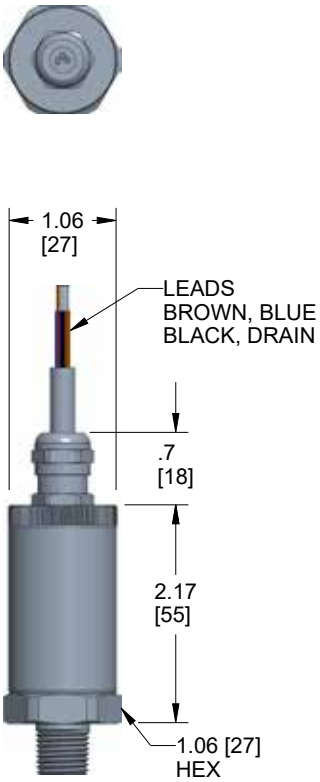

Dimensions

PT40 Process Connections

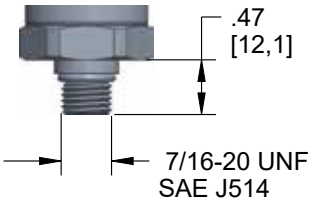

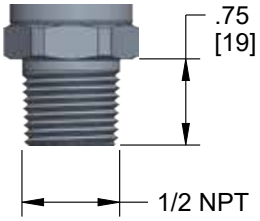

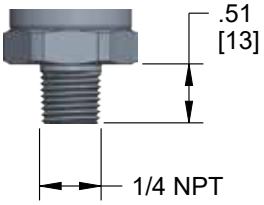

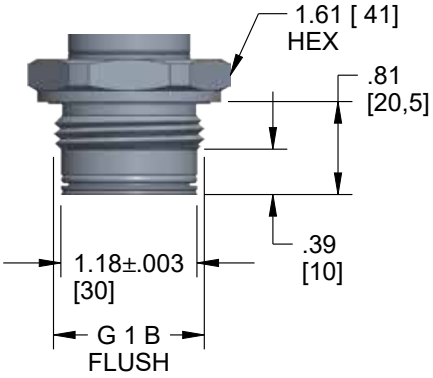

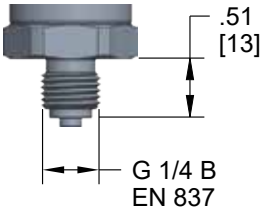

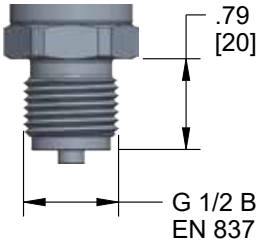

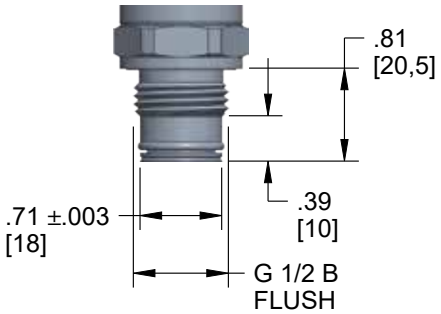

High Pressure Fixed Range



PT41 SERIES

- Gauge ranges from 23,000 psig to 145,000 psig
- Current and voltage outputs available
- Elgiloy and 13-8PH Stainless Steel wetted parts
- CE compliant to suppress RFI, EMI and ESD
- RoHS compliant

APPLICATIONS

- Laboratory & test equipment
- Power generation
- Hydrostatic testing
- High pressure cleaning
- Waterjet cutting

SPECIFICATIONS

Output signals	4 mA to 20 mA, 2-wire; 0 Vdc to 5 Vdc, 0 Vdc to 10 Vdc, 3-wire	
Pressure ranges	Gauge ranges from 23,000 psi through 145,000 psi	
Accuracy*	±0.50% of span, optional ±0.25% of span, non-linearity best fit straight line per IEC 61298-2 at reference conditions	
Adjustment	± 10% full scale for zero and span	
Response time	< 1 ms (between 10% and 90% full scale)	
Temperature ranges*	Compensated: Media: Ambient: Storage:	32 °F to 176 °F (0 °C to 80 °C) 32 °F to 176 °F (0 °C to 80 °C) -4 °F to 176 °F (-20 °C to 80 °C) -40 °F to 185 °F (-40 °C to 85 °C)
Power requirement*	10 Vdc to 30 Vdc: 14 Vdc to 30 Vdc:	4 mA to 20 mA, 2-wire, 0 Vdc to 5 Vdc, 3-wire 0 Vdc to 10 Vdc, 3-wire
Proof & burst pressure	See user manual	
Measuring element	Elgiloy and 13-8PH Stainless Steel	
Process connection	13-8PH Stainless Steel	
Housing material	316 Stainless Steel	
Environmental rating	IP65: DIN EN 175301-803 Form C IP67: 4-pin Bayonet, 6-pin Bayonet, 1/2" NPT conduit, M12 x 1 (4-pin), Integral cable	
Electromagnetic rating	CE compliant to EMC norm EN 61326:2014/A1:1998 RFI, EMI and ESD protection	
Electrical protection	Reverse polarity, overvoltage and short circuit protection	
Shock	100 g's according to IEC 60068-2-27	
Vibration	15 g's according to IEC 60068-2-6	
Weight	Approximately 7.5 oz.	

* See user manual for detailed specifications

WARNING: This product can expose you to chemicals including Lead and Nickel, which are known to the State of California to cause cancer and birth defects or other reproductive harm. For more information go to www.P65Warnings.ca.gov

ORDERING INFORMATION						
SERIES	**PT41**					
PRESSURE RANGES	**23000psig**	0 psig to 23,000 psig	**58000psig**	0 psig to 58,000 psig	**100000psig**	0 psig to 100,000 psig
	30000psig	0 psig to 30,000 psig	**72000psig**	0 psig to 72,000 psig	**115000psig**	0 psig to 115,000 psig**
	36000psig	0 psig to 36,000 psig	**87000psig**	0 psig to 87,000 psig	**145000psig**	0 psig to 145,000 psig**
			psig = gauge pressure	Other ranges available on request		
ACCURACIES	**1**	±0.50% (of span, non-linearity, BFSL per IEC 61298-2 at reference conditions)	**2**	±0.25% (of span, non-linearity, BFSL per IEC 61298-2 at reference conditions)		
OUTPUT SIGNALS	**1**	4 mA to 20 mA, 2-wire	**2**	0 Vdc to 5 Vdc, 3-wire	**5**	0 Vdc to 10 Vdc, 3-wire
PROCESS CONNECTION	**6**	9/16 -18 UNF 2B high pressure cone*	**51**	M20 x 1.5 female thread with sealing cone		Other connections available upon request
ELECTRICAL CONNECTIONS	**3**	6-pin Bayonet			**18**	DIN EN 175301-803 Form A w/ 3 ft. cable
	8	DIN EN 175301-803 Form A			**25**	M12 x 1 (4-pin)
	14	DIN EN 175301-803 Form A w/ 1/2" NPT female conduit			**36**	3 ft. Integral cable
	16	1/2" NPT conduit w/ 3 ft. cable				

Please consult your local NOSHOK Distributor or NOSHOK, Inc. for availability and delivery information.

* Equivalent to F250C Parker Autoclave

** Only available with M20 x 1.5 female thread with sealing cone (-51)

EXAMPLE

PT41 – 23000psig – 2 – 1 – 6 – 8

Series ..... PT41 Series
Pressure range ..... 0 psig to 23,000 psig
Accuracy ..... ±0.25% of span (BFSL)
Output signal ..... 4 mA to 20 mA, 2-wire
Process connection ..... 9/16" -18 UNF 2B High Pressure Cone
Electrical connection ..... DIN EN 175301-803 Form A

Dimensions

PT41-3 (6-Pin Bayonet)

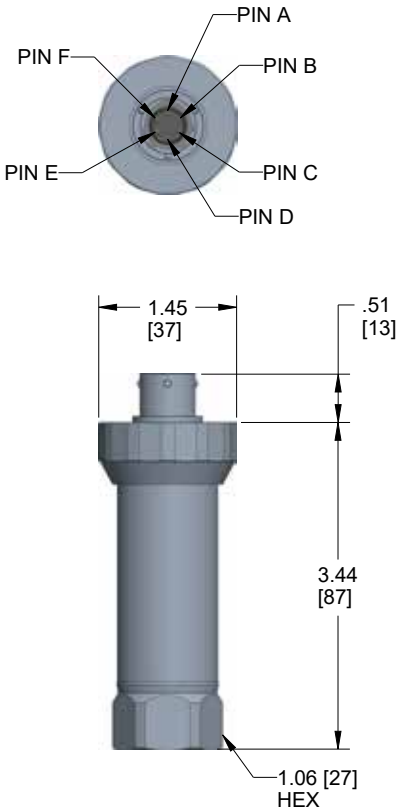

PT41 (DIN EN 175301-803 Form A)

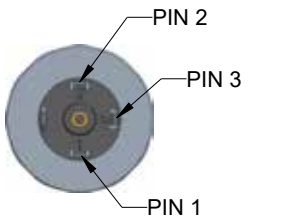

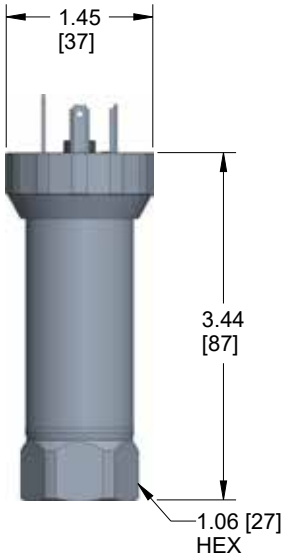

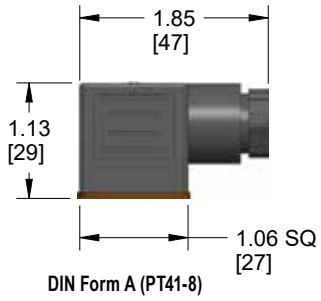

DIN Form A (PT41-8)

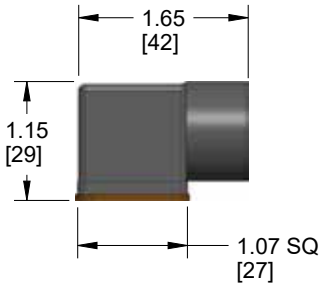

DIN Form A 1/2 NPT CONDUIT (PT41-14)

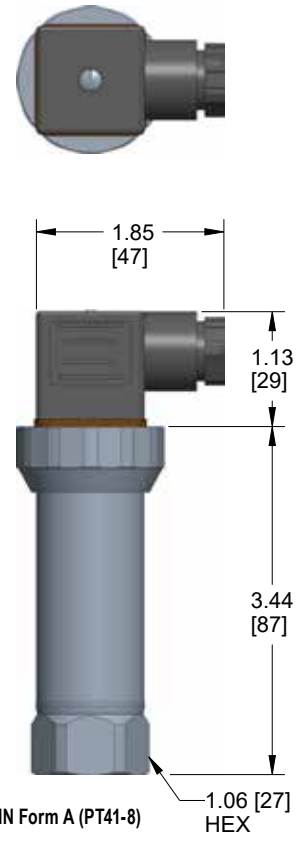

DIN Form A (PT41-8)

PT41-16 (1/2" NPT conduit w/ 3 ft. Cable)

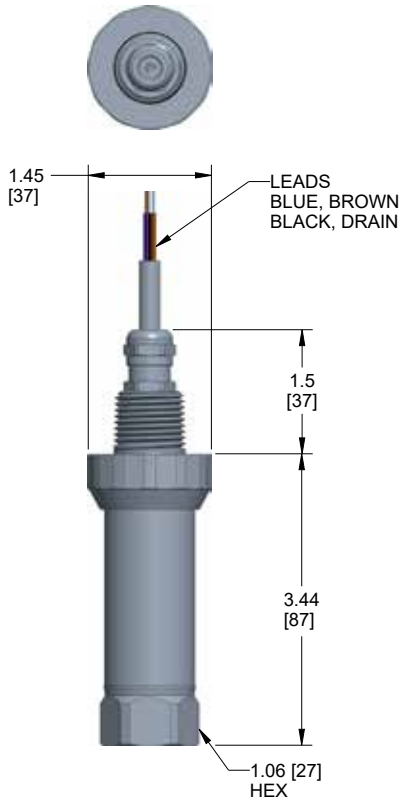

PT41-25 (M12 x 1 4-pin)

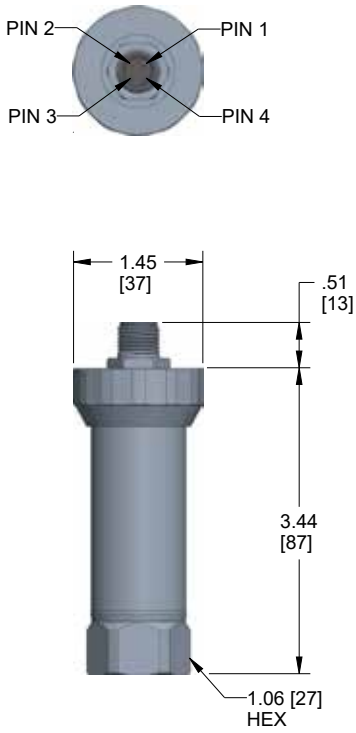

PT41-36 (3 ft. Integral Cable)

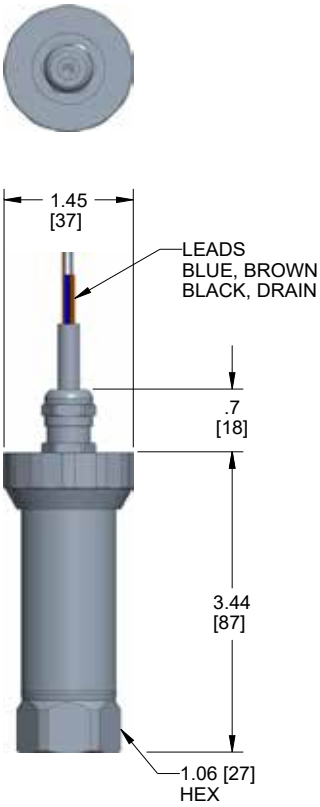

Intelligent Pressure Transmitter - IO-Link

IO-Link | c UL us LISTED | NOSHOK



PTI10 SERIES

- Digital IO-Link can be used for pressure monitoring or as an electronic PNP switch for process control
- Integrated diagnostic functions with multicolor LED status display for easy maintenance
- Simplified machine integration with product specific drivers
- Fully welded electrical connection available for harsh and high vibration environments

APPLICATIONS

- Hydraulics & pneumatics
- Automation engineering
- Pumps & compressors
- Water & wastewater

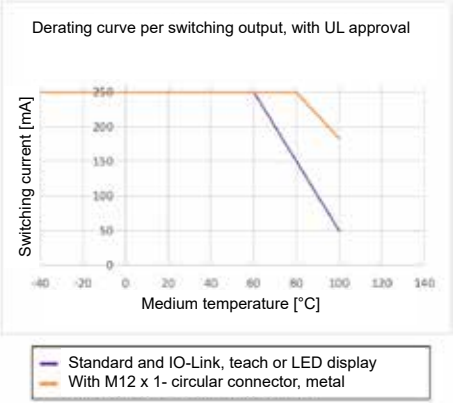

SPECIFICATIONS

Pressure ranges	Compound and standard ranges from 1 bar through 1000 bar
Output parameters	
Number	2 outputs, individually adjustable via IO-Link (PNP)
Function	Normally open, normally closed, window and hysteresis (adjustable via IO-Link)
Switching Current	Max 250 mA
Response time	≤ 5 ms
Zero Point Offset	Max 3% of span (via IO-Link)
Damping	0 ms to 65 ms (via IO-Link)
Switch On Time	1 s
Switching Voltage	Power supply - 1 V
Accuracy parameters	
Accuracy, Switching output	≤ 1.0% of span (optional ≤ 0.5% of span)
Long term drift	≤ 0.1 %, ≤ 0.2 % for ranges below 0.69 bar (10 psi)
Termperature error	≤ 1.5 % of span
Temperature coeffiients	Mean TC zero point: ≤ 0.16 % of span/10K Mean TC span: ≤ 0.16 % of span/10K
Service life	100,000,000 cycles (MTTF > 100 years)
Temperature ranges	Compensated -4 °F to 176 °F (-20 °C to 80 °C) Media -22 °F to 212 °F (-30 °C to 100 °C) w/metal conn. -40 °F to 257 °F (-40 °C to 125 °C) Ambient -22 °F to 212 °F (-30 °C to 100 °C) w/metal conn. -40 °F to 185 °F (-40 °C to 85 °C) Storage -40 °F to 158 °F (-40°C to 70°C)
Humidity	45 - 75% r.h.
LED status	Green: Operation, Yellow: Warning, Red: Error
Power requirement*	10 - 32 Vdc
Current consumption	≤ 25 mA, ≤ 0.3 A including switching current (one switching output), ≤ 0.6 A including switching current (two switching outputs)
Proof pressure	≤ 600 bar (8000 psi) - 2 X, > 600 bar (8000 psi) - 1.5 X
Measuring element	<10 bar: 316L Stainless steel ≥10 bar: 316L, PH grade Stainless Steel
Housing material	316L Stainless Steel
Connection	PBT GF30, 316L Stainless Steel
Environmental rating	IP65 and IP67 per IEC 60529
Electromagnetic rating	RFI, EMI and ESD protection
Electrical protection	Protected against reverse polarity, over-voltage and short circuit
Shock	100 g, 6 ms per IEC 60068-2-27, mechanical (metal connector: 1,000 g, 1 ms per IEC 60068-2-27, mechanical)
Vibration	25 g, 10 to 2,000 Hz (according to IEC 60068-2-6, under resonance)
Weight	Approx. 2.8 oz.

* See user manual for detailed specifications

⚠ **WARNING:** This product can expose you to chemicals including Lead and Nickel, which are known to the State of California to cause cancer and birth defects or other reproductive harm. For more information go to www.P65Warnings.ca.gov

ORDERING INFORMATION

SERIES	**PTI10**							
PRESSURE RANGES	**1barv**	-1 barg to 0 barg (-14.5 psig to 0 psig)	**2.5barg**	0 barg to 2.5 barg (0 psig to 36.3 psig)	**600barg**	0 barg to 600 barg (0 psig to 8700 psig)		
	.6barc	-1 barg to 0.6 barg (-14.5 psig to 8.7 psig)	**4barg**	0 barg to 4 barg (0 psig to 58 psig)	**1000barg**	0 barg to 1000 barg (0 psig to 14500 psig)		
	1.5barc	-1 barg to 1.5 barg (-14.5 psig to 21.8 psig)	**6barg**	0 barg to 6 barg (0 psig to 87 psig)	**.4bara**	0 bara to 0.4 bara (0 psia to 5.8 psia)		
	3barc	-1 barg to 3 barg (-14.5 psig to 43.5 psig)	**10barg**	0 barg to 10 barg (0 psig to 145 psig)	**.6bara**	0 bara to 0.6 bara (0 psia to 8.7 psia)		
	5barc	-1 barg to 5 barg (-14.5 psig to 72.5 psig)	**16barg**	0 barg to 16 barg (0 psig to 232 psig)	**1bara**	0 bara to 1 bara (0 psia to 14.5 psia)		
	9barc	-1 barg to 9 barg (-14.5 psig to 130.5 psig)	**25barg**	0 barg to 25 barg (0 psig to 362.5 psig)	**1.6bara**	0 bara to 1.6 bara (0 psia to 23.2 psia)		
	15barc	-1 barg to 15 barg (-14.5 psig to 217.5 psig)	**40barg**	0 barg to 40 barg (0 psig to 580 psig)	**2.5bara**	0 bara to 2.5 bara (0 psia to 36.3 psia)		
	24barc	-1 barg to 24 barg (-14.5 psig to 348 psig)	**60barg**	0 barg to 60 barg (0 psig to 870 psig)	**4bara**	0 bara to 4 bara (0 psia to 58 psia)		
	.4barg	0 barg to 0.4 barg (0 psig to 5.8 psig)	**100barg**	0 barg to 100 barg (0 psig to 1450 psig)	**6bara**	0 bara to 6 bara (0 psia to 87 psia)		
	.6barg	0 barg to 0.6 barg (0 psig to 8.7 psig)	**160barg**	0 barg to 160 barg (0 psig to 2320 psig)	**10bara**	0 bara to 10 bara (0 psia to 145 psia)		
	1barg	0 barg to 1 barg (0 psig to 14.5 psig)	**250barg**	0 barg to 250 barg (0 psig to 3625 psig)	**16bara**	0 bara to 16 bara (0 psia to 232 psia)		
	1.6barg	0 barg to 1.6 barg (0 psig to 23.2 psig)	**400barg**	0 barg to 400 barg (0 psig to 5800 psig)	**25bara**	0 bara to 25 bara (0 psia to 362.5 psia)		
		barv = vacuum gauge pressure	barc = compound gauge pressure		barg = gauge pressure	bara = absolute pressure	Other ranges available on request	
ACCURACY	**1**	1.0% full scale	**2**	0.5% full scale				
OUTPUT SIGNAL	**54**	IO-Link v 1.1 (2 configurable outputs, PNP)	**56**	IO-Link v 1.1 (1 configurable output, PNP)				
PROCESS CONNECTIONS	**2**	1/4" NPT male	**10**	G 1/4 B male EN837	**46**	G 1/4 A male ISO 1179-2		
	8	1/2" NPT male	**45**	7/16-20 SAE J514 FIG 34B (Non-Adjustable)	**83**	G 1/2 B male EN837		
ELECTRICAL CONNECTIONS	**25**	M12 x 1 (4-pin)	**25M**	M12 x 1 (4-pin), heavy-duty				
OPTIONS	**ST8**	SS Threaded Orifice (0.8 mm)						

Please consult your local NOSHOK Distributor or NOSHOK, Inc. for availability and delivery information.

EXAMPLE

PTI10 – 1barv – 1 – 54 – 8 – 25 – ST8

Series ..... PTI10 Series
Pressure range ..... -1 barg to 0 barg (-14.5 psig to 0 psig)
Accuracy ..... 1.0% full scale
Output signal ..... IO-Link v 1.1.4 (2 configurable outputs, PNP)
Process connection ..... 1/2" NPT male
Electrical connection ..... M12 x 1 (4-pin)
Option ..... SS Threaded orifice (0.8 mm)

PTI10-25 (M12 x 1 4-pin)

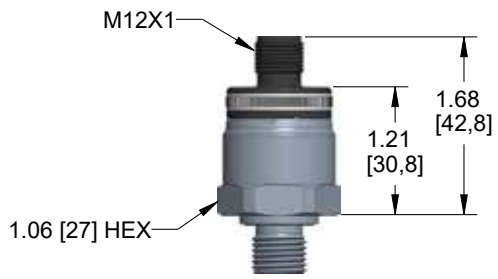

PTI10-25M (M12 x 1 4-pin), heavy-duty

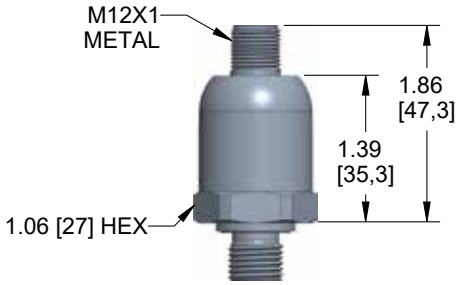

Dimensions

PTI10 Process Connections

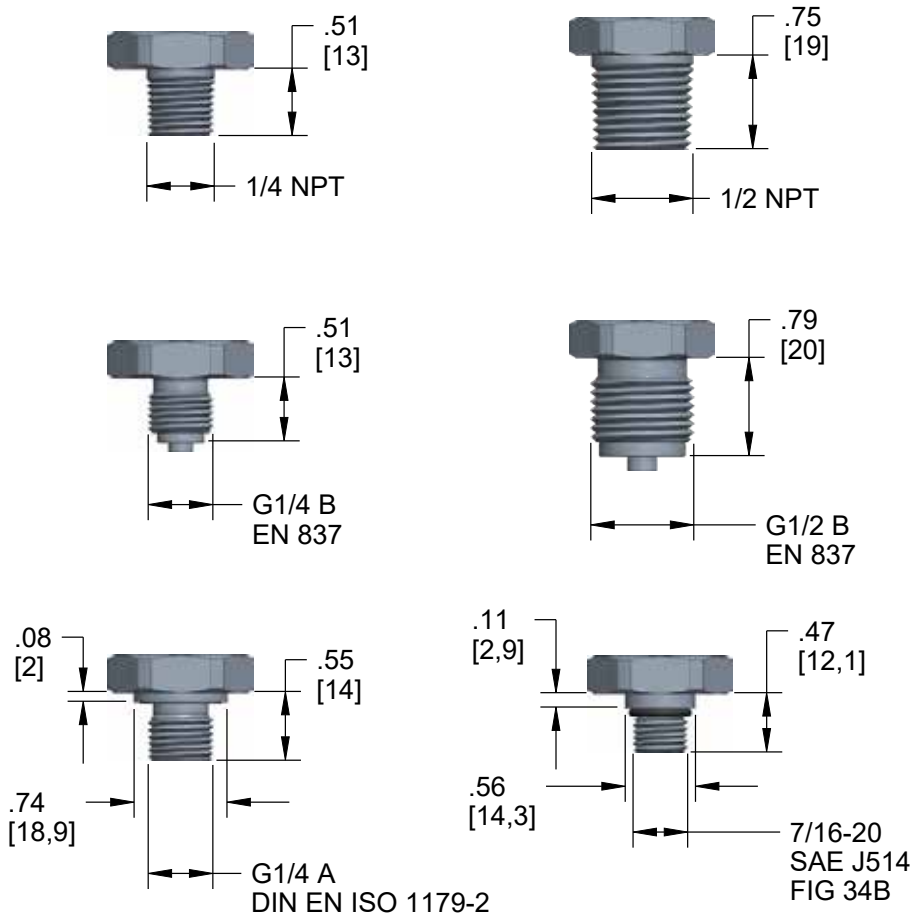

Intelligent Indicating Transmitter/Switch - IO-Link



PTI15 SERIES

- Compound and standard ranges from 0 psig to 10 psig through 0 psig to 7,500 psig
- 316L Stainless Steel wetted parts
- Current and voltage outputs available
- 7 different output configurations available
- Advanced functionality with optional IO-Link
- Display and electrical connection can be rotated independently
- RoHS compliant

APPLICATIONS

- Hydraulics & pneumatics
- Power generation
- Pumps & compressors
- Stamping & forming presses
- Water & wastewater

SPECIFICATIONS

Pressure ranges	Compound and standard ranges from 0 psig to 10 psig through 0 psig to 7,500 psig
Switching parameters	Individually adjustable via external control keys
Number	1 or 2 (PNP or NPN)
Function	N.O., N.C., window, hysteresis (freely adjustable)
Contact rating	250 mA max.
Response time	≤5 ms
Accuracy	≤ 0.5 % of span
Switch point	.25 to 100% of full scale
Hysteresis	Fully adjustable
Transmitter parameters	
Output signal	4 mA to 20 mA or 0 Vdc to 10 Vdc; programmable and freely adjustable
Accuracy	≤±0.5% of span including non-linearity, hysteresis, zero offset and end value deviation (corresponds to measured error per IEC 61298-2)
Non-repeatability	< 0.1% of span (IEC 61298-2)
Adjustment	Freely scalable within the range of 5:1
IO-Link	Version 1.1.4
Service life	100,000,000 load cycles
Temperature ranges	Compensated 32 °F to 176 °F (0 °C to 80 °C) Media -4 °F to 185 °F (-20 °C to 85 °C) Ambient -4 °F to 176 °F (-20 °C to 80 °C) Storage -4 °F to 158 °F (-20 °C to 70 °C)
Display	14 segment-LED, red 4-digit, height 0.35"
Power requirement*	15 - 35 Vdc
Current consumption	Max. 45 mA for versions without 4-20 mA output signal, Max. 70 mA for versions with 4-20 mA output signal, Total consumtpion max. 600 mA including switching current
Proof pressure	2 times full scale
Measuring element	<150 psi: 316L Stainless steel ≥150 psi: 316L, PH grade Stainless steel
Housing material	304 Stainless steel
Connection	316 stainless steel
Environmental rating	IP65 and IP67 per IEC 60529
Electromagnetic rating	RFI, EMI and ESD protection
Electrical protection	Protected against reverse polarity, over-voltage and short circuit
Shock	> 50 g's according to IEC 60068-2-27
Vibration	> 20 g's according to IEC 60068-2-6
Weight	Approx 0.49 lb.

* Unregulated

WARNING: This product can expose you to chemicals including Lead and Nickel, which are known to the State of California to cause cancer and birth defects or other reproductive harm. For more information go to www.P65Warnings.ca.gov

Adaptive Industrial Solutions | sales@adaptiveind.com | (877) 818-5009

ORDERING INFORMATION

SERIES	**PTI15**						
PRESSURE RANGES	**15psiv**	-14.5 psig to 0 psig	**15psig**	0 psig to 15 psig	**1000psig**	0 psig to 1,000 psig	**30psia** 0 psia to 30 psia
	15psic	-14.5 psig to 15 psig	**25psig**	0 psig to 25 psig	**1500psig**	0 psig to 1,500 psig	**50psia** 0 psia to 50 psia
	30psic	-14.5 psig to 30 psig	**30psig**	0 psig to 30 psig	**2000psig**	0 psig to 2,000 psig	**100psia** 0 psia to 100 psia
	50psic	-14.5 psig to 50 psig	**50psig**	0 psig to 50 psig	**3000psig**	0 psig to 3,000 psig	**160psia** 0 psia to 160 psia
	100psic	-14.5 psig to 100 psig	**100psig**	0 psig to 100 psig	**5000psig**	0 psig to 5,000 psig	**200psia** 0 psia to 200 psia
	160psic	-14.5 psig to 160 psig	**160psig**	0 psig to 160 psig	**7500psig**	0 psig to 7,500 psig	**300psia** 0 psia to 300 psia
	200psic	-14.5 psig to 200 psig	**200psig**	0 psig to 200 psig	**10psia**	0 psia to 10 psia	
	300psic	-14.5 psig to 300 psig	**300psig**	0 psig to 300 psig	**15psia**	0 psia to 15 psia	
	10psig	0 psig to 10 psig	**500psig**	0 psig to 500 psig	**25psia**	0 psia to 25 psia	
	psiv = vacuum gauge pressure psic = compound gauge pressure psig = gauge pressure psia = absolute pressure Other ranges available upon request.						
ACCURACY	**1**	±0.5% (of span, non-linearity, BFSL per IEC 61298-2 at reference conditions)					
SWITCH-OUTPUT	**1**	2 N.O. or N.C. (PNP or NPN)			**5**	2 N.O. or N.C. switch (PNP/NPN) with 0 Vdc to 10 Vdc*	
	2	1 N.O. or N.C. (PNP or NPN) with 4 mA to 20 mA			**6**	1 N.O. or N.C. switch (PNP/NPN) with 4 mA to 20 mA/0 Vdc to 10 Vdc **	
	3	1 N.O. or N.C. (PNP or NPN) with 0 Vdc to 10 Vdc					
	4	2 N.O. or N.C. (PNP or NPN) with 4 mA to 20 mA*			**7**	2 N.O. or N.C. switch (PNP/NPN) with 4 mA to 20 mA/0 Vdc to 10 Vdc *, **	
PROCESS CONNECTIONS	**2**	1/4" NPT male	**10**	G1/4B EN837	**83**	G 1/2 B EN837	
	8	1/2" NPT male	**45**	7/16-20 SAE J514 FIG 34B (Non-Adjustable)			
ELECTRICAL CONNECTIONS	**25**	M12 x 1 (4-pin)	**48**	M12 x 1 (5-pin)			
OPTION	**IOL**	With IO-Link	**ST8**	Threaded Orifice (0.8 mm)			

Please consult your local NOSHOK Distributor or NOSHOK, Inc. for availability and delivery information.

* Available only with a M12 x 1 (5-pin) connector
** Can switch between 4 mA to 20 mA / 0 Vdc to 10 Vdc

EXAMPLE

PTI15 – 15psig – 1 – 1 – 2 – 25 – IOL

Series .....PTI15 Series
Pressure Range..... 0 psig to 15 psig
Accuracy .....±0.5% of span (BFSL)
Output-Switch..... 2 N.O. or N.C. (PNP or NPN)
Process connection .....1/4 NPT male
Electrical connection ..... M12 x 1 (4-pin)
Option.....With IO-Link

1 switching output (-2, -3, -6) with 4 mA to 20 mA signal†
p-switching

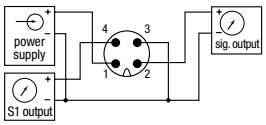

1 switching output (-2, -3, -6) with 4 mA to 20 mA signal†
n-switching

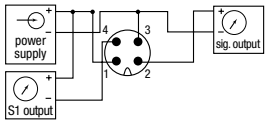

2 switching output (-1)
p-switching

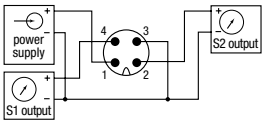

2 switching output (-1)
n-switching

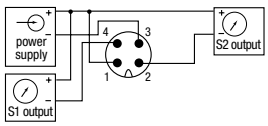

2 switching output (-4, -5, -7) with 4 mA to 20 mA signal†
p-switching

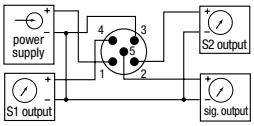

2 switching output (-4, -5, -7) with 4 mA to 20 mA signal†
n-switching

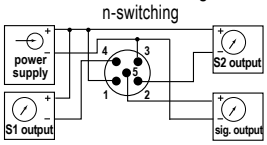

† Also applies to 0 Vdc to 10 Vdc output

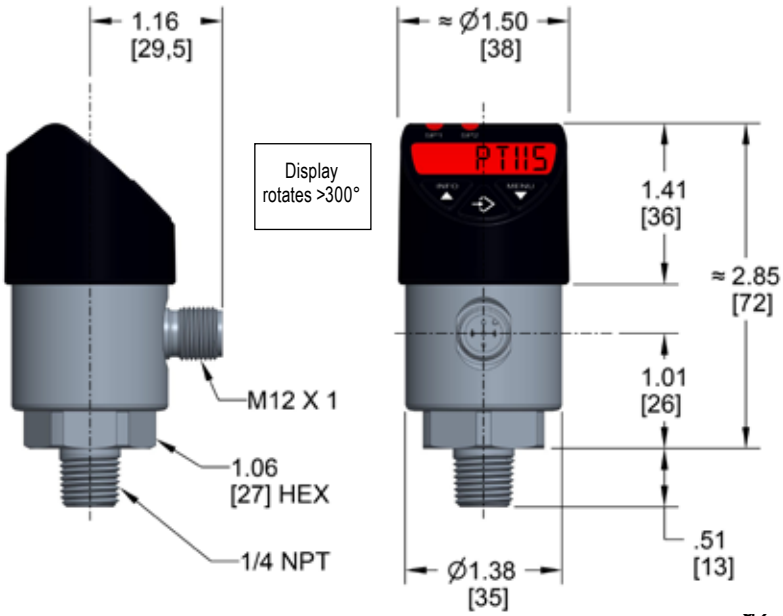



PTI20 SERIES

- Adjustable pressure ranges vacuum to 1,160 psig
- All ranges are user adjustable from vacuum to full scale with standard on board display
- 4 mA to 20 mA HART® optional pressure transmitter
- Accuracy ±0.2% of adusted span
- 4:1 turn down
- All Stainless Steel construction with 316 Stainless Steel wetted parts
- Built to suppress RFI, EMI and ESD

APPLICATIONS

- General industrial
- Pulp & paper
- Water & wastewater
- Power generation
- Food & beverage

SPECIFICATIONS

Output signals	4 mA to 20 mA 2-wire, 4 mA to 20 mA 2-wire with HART®
Adjustable pressure ranges	5 psig to 1,160 psig (All ranges are user adjustable from vacuum to full scale)
Accuracy	0.2% of adjusted span (Turn down 4:1)
Stability	<0.1%/year
Adjustment	By 3 push buttons on display or optional HART® protocol
Response time	<100 ms
Service life	>10 years
Temperature ranges	Media -4 °F to 176 °F (-20 °C to 80 °C) Ambient -4 °F to 158 °F (-20 °C to 70 °C) Flange -4 °F to 212 °F (-20 °C to 100 °C)
Power requirement*	12 Vdc to 36 Vdc
Measuring element	316 Stainless Steel (Hastelloy C or Tantalum optional)
Connection	316 Stainless Steel
Housing material	304 Stainless Steel (316 Stainless Steel optional)
Environmental rating	IP66 (IP68 optional)
Electromagnetic rating	Built to suppress RFI, EMI and ESD protection
Weight	Approximately 3.30 lb. (Depending on process connection)

* Unregulated

⚠ **WARNING:** This product can expose you to chemicals including Nickel, which are known to the State of California to cause cancer and birth defects or other reproductive harm. For more information go to www.P65Warnings.ca.gov.

ORDERING INFORMATION

SERIES	**PTI20**					
ADJUSTABLE PRESSURE RANGES	**5psig**	Min. span 1.45 psi, max. span 5.8 psi (lowest vacuum pressure -5.8 psig)		**145psig**	Min. span 29 psi, max. span 145 psi (lowest vacuum pressure -15 psig)	
	20psig	Min. span 5.8 psi, max. span 23 psi (lowest vacuum pressure -15 psig)		**350psig**	Min. span 87 psi, max. span 350 psi (lowest vacuum pressure -15 psig)	
	55psig	Min. span 14.5 psi, max. span 58 psi (lowest vacuum pressure -15 psig)		**1150psig**	Min. span 290 psi, max. span 1,160 psi (lowest vacuum pressure -15 psig)	
		psig = gauge pressure	All ranges can be user scaled in vacuum or compound.			
ACCURACY	**1**	±0.2% of adjusted span (4:1 turndown)				
OUTPUT SIGNALS	**1**	4 mA to 20 mA, 2-wire	**43**	4 mA to 20 mA, 2-wire with HART®		
PROCESS CONNECTIONS	**8**	1/2" NPT male	**74**	1-1/2" NPT male flush	**77**	2" ANSI 150# Flange
	69	1/2" NPT female	**75**	Threaded flush diaphragm for flange (flange not included)	**78**	3" ANSI 150# Flange
	73	1" NPT male flush	**76**	1-1/2" ANSI 150# Flange	**79**	1" PMC connection
					80	1-1/2" PMC connection
ELECTRICAL CONNECTIONS	**25**	M12 x 1 (4-pin)	**28**	1/2" NPT Female	**71**	PG9 Cable Gland
OPTIONS	**CC**	Certified Calibration	**RMT-10**	Remote Mount Head with 10 ft cable *	**TC**	Transparent Cover (for display)

Please consult your local NOSHOK Distributor or NOSHOK, Inc. for availability and delivery information.

*Custom Lengths Available, Consult Factory

EXAMPLE

PTI20 – 5psig – 1 – 1 – 8 – 28 – CC

Series ..... PTI20 Series
Adjustable pressure range ..... Min. span 1.45 psi, max. span 5.8 psi
Accuracy ..... ±0.2% of adusted span
Output signal ..... 4 mA to 20 mA, 2-wire
Process connection ..... 1/2" NPT Male
Electrical connection ..... 1/2" NPT Female
Option ..... Certified Calibration

UNINSTALLED OPTIONS & ACCESSORIES

PTI-FLANGE-15-150LB	1-1/2" ANSI 150# Flange only	**PTI-15-PMC-WA**	1-1/2" in PMC Weld Adapter
PTI-FLANGE-20-150LB	2" ANSI 150# Flange only	**PTI-PMC-GASKET-15**	PTFE Gasket for 1 1/2" PMC
PTI-FLANGE-30-150LB	3" ANSI 150# Flange only	**PTI-PMC-ORING-1**	FKM O-Rings for 1" PMC
PTI-10-PMC-WA	1" PMC Weld Adapter		

Consult factory for availability.

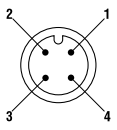

M12x1 (4-Pin)

M12 x 1 (4-PIN) WIRING

1	V+
2	Not used
3	V-
4	Not used

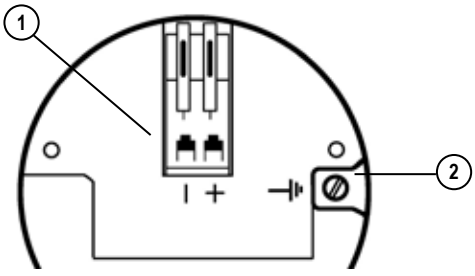

TERMINAL CONNECTION

1	Voltage supply/Output signal (4 mA to 20 mA)
2	Internal Ground

Dimensions

PTI20-8 (1/2" NPT Male)

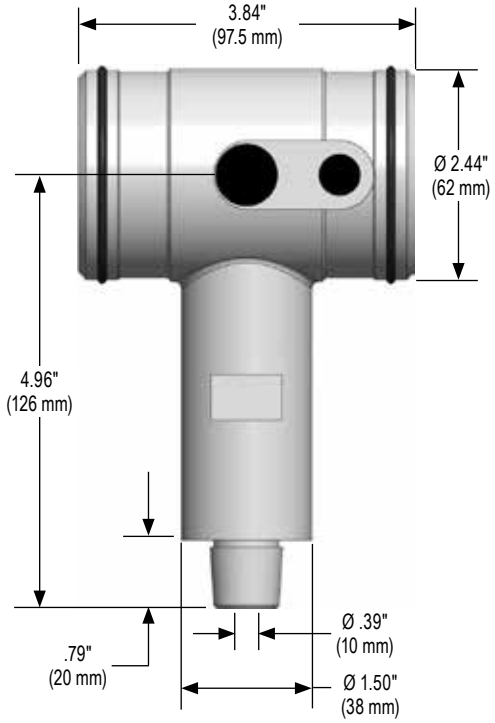

PTI20-69 (1/2" NPT Female)

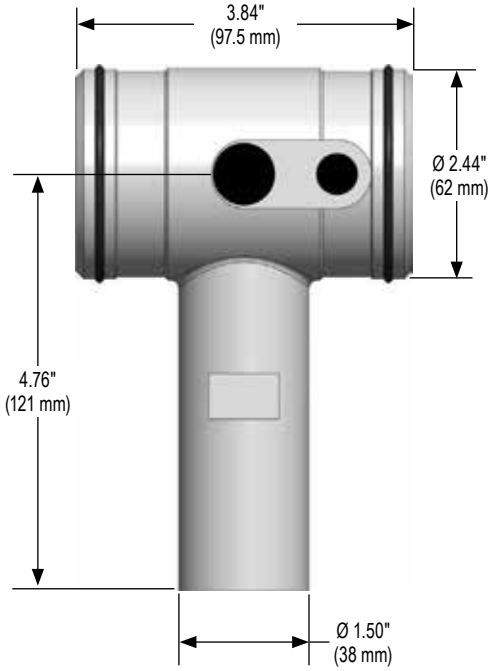

PTI20-73 (1" NPT Male)

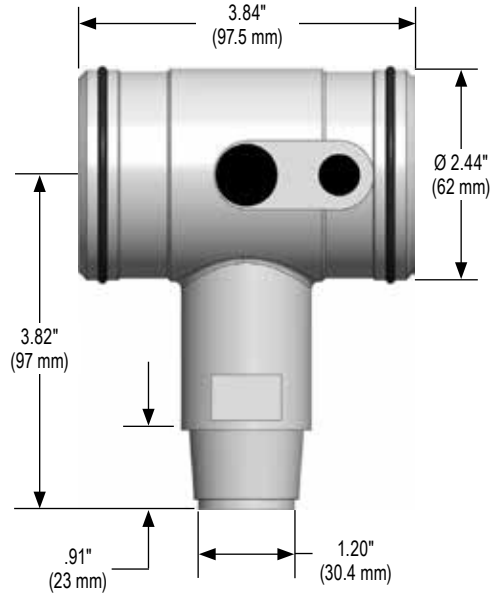

PTI20-76 (Flange)*

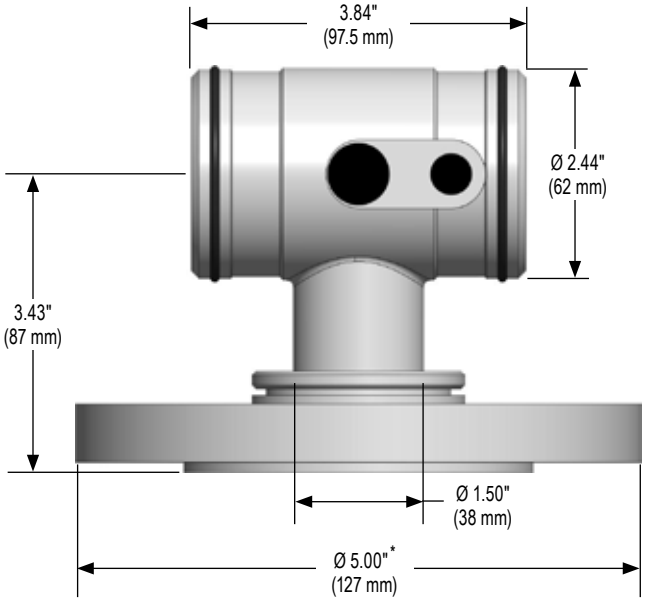

* Dimensions for PTI20-77 (Flange) Ø 6.00" (152 mm)
* Dimensions for PTI20-78 (Flange) Ø 7.50" (190 mm)

PTI20-79 (1" PMC)

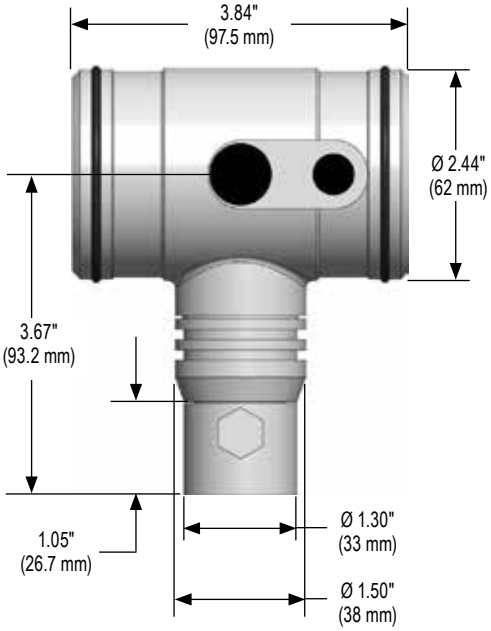

PTI20-80 (1-1/2" PMC)

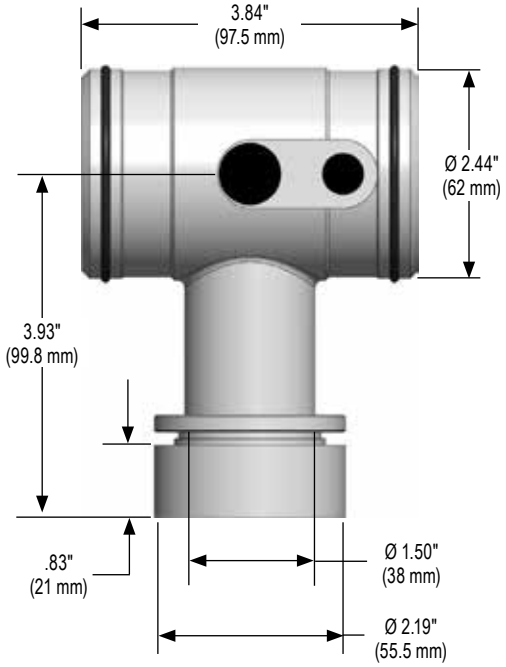

High Accuracy Intelligent CE



PTI30 SERIES

- Adjustable pressure ranges vacuum to 1,450 psig
- All ranges are user adjustable from vacuum to full scale with standard on board display
- 4 mA to 20 mA HART® optional pressure transmitter
- Accuracy ±0.1% of adusted span
- 10:1 turn down
- All Stainless Steel construction with 316 Stainless Steel wetted parts
- CE compliant to suppress RFI, EMI and ESD

APPLICATIONS

- General industrial
- Pulp & paper
- Water & wastewater
- Power generation
- Food & beverage

SPECIFICATIONS

Output signals	4 mA to 20 mA 2-wire, 4 mA to 20 mA 2-wire with HART®
Adjustable pressure ranges	5 psig to 1,450 psig (All ranges are user adjustable from vacuum to full scale)
Accuracy	0.1% of adjusted span (Turn down 10:1)
Stability	<0.1%/year
Adjustment	By 3 push buttons on display or optional HART® protocol
Response time	<250 ms
Service life	>10 years
Temperature ranges	Media -4 °F to 176 °F (-20 °C to 80 °C) Ambient -4 °F to 158 °F (-20 °C to 70 °C) Flange -4 °F to 212 °F (-20 °C to 100 °C)
Power requirement*	12 Vdc to 36 Vdc
Measuring element	316 Stainless Steel (Hastelloy C, Tantalum or Goldplated optional)
Connection	316 Stainless Steel
Housing material	304 Stainless Steel (316 Stainless Steel optional)
Environmental rating	IP66 (IP68 optional)
Electromagnetic rating	CE compliant to EMC-Directive 2014/30/EU RFI, EMI and ESD protection
Weight	Approximately 3.3 lb. (Depending on process connection)

* Unregulated

⚠ **WARNING:** This product can expose you to chemicals including Nickel, which are known to the State of California to cause cancer and birth defects or other reproductive harm. For more information go to www.P65Warnings.ca.gov.

ORDERING INFORMATION

SERIES	**PTI30**					
ADJUSTABLE PRESSURE RANGES	**5psig**	Min. span 1.45 psi, max. span 5.8 psi (lowest vacuum pressure -5.8 psig)		**435psig**	Min. span 72.5 psi, max. span 435 psi (lowest vacuum pressure -15 psig)	
	17psig	Min. span 4 psi, max. span 17.4 psi (lowest vacuum pressure -15 psig)		**1450psig**	Min. span 290 psi, max. span 1,450 psi (lowest vacuum pressure -15 psig)	
	145psig	Min. span 14.5 psi, max. span 145 psi (lowest vacuum pressure -15 psig)				
		psig = gauge pressure	All ranges can be user scaled in vacuum or compound			
ACCURACY	**1**	±0.1% of adusted span (10:1 turn down)				
OUTPUT SIGNALS	**1**	4 mA to 20 mA, 2-wire	**43**	4 mA to 20 mA, 2-wire with HART®		
PROCESS CONNECTIONS	**8**	1/2" NPT male	**74**	1-1/2" NPT male flush	**77**	2" ANSI 150# Flange
	69	1/2" NPT female	**75**	Threaded flush diaphragm for flange (flange not included)	**78**	3" ANSI 150# Flange
	73	1" NPT male flush	**76**	1-1/2" ANSI 150# Flange	**79**	1" PMC connection
					80	1-1/2" PMC connection
ELECTRICAL CONNECTIONS	**25**	M12 x 1 (4-pin)	**28**	1/2" NPT Female	**71**	PG9 Cable Gland
OPTIONS	**CC**	Certified Calibration	**RMT-10**	Remote Mount Head with 10 ft cable *	**TC**	Transparent Cover (for display)

Please consult your local NOSHOK Distributor or NOSHOK, Inc. for availability and delivery information.

*Custom Lengths Available, Consult Factory

EXAMPLE

PTI30 – 5psig – 1 – 1 – 8 – 28 – TC

Series ..... PTI30 Series
Adjustable pressure range ..... Min. span 1.45 psi, max. span 5.8 psi
Accuracy ..... ±0.2% of adusted span
Output signal ..... 4 mA to 20 mA, 2-wire
Process connection ..... 1/2" NPT Male
Electrical connection ..... 1/2" NPT Female
Option ..... Transparent Cover

UNINSTALLED OPTIONS & ACCESSORIES

PTI-FLANGE-15-150LB	1-1/2" ANSI 150# Flange only	**PTI-15-PMC-WA**	1-1/2" in PMC Weld Adapter
PTI-FLANGE-20-150LB	2" ANSI 150# Flange only	**PTI-PMC-GASKET-15**	PTFE Gasket for 1 1/2" PMC
PTI-FLANGE-30-150LB	3" ANSI 150# Flange only	**PTI-PMC-ORING-1**	FKM O-Rings for 1" PMC
PTI-10-PMC-WA	1" PMC Weld Adapter		

Consult factory for availability.

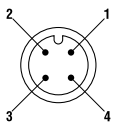

M12x1 (4-Pin)

M12 x 1 (4-PIN) WIRING

1	V+
2	Not used
3	V-
4	Not used

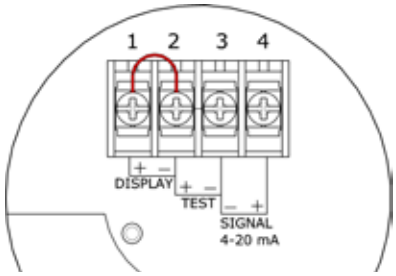

TERMINAL CONNECTION

3	V-
4	V+

Dimensions

PTI30-8 (1/2" NPT Male)

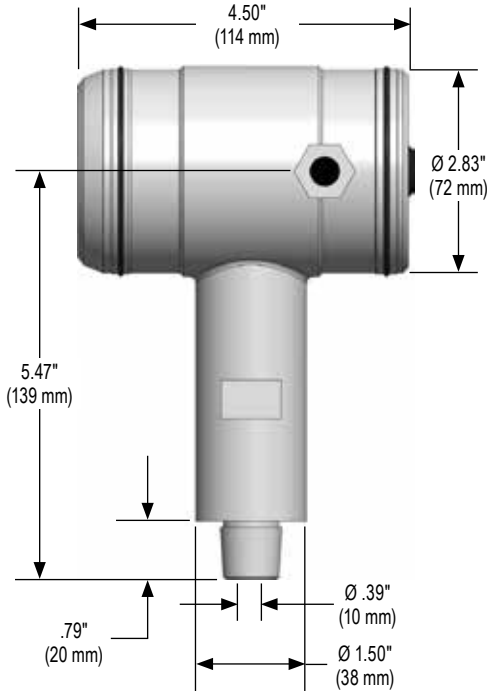

PTI30-69 (1/2" NPT Female)

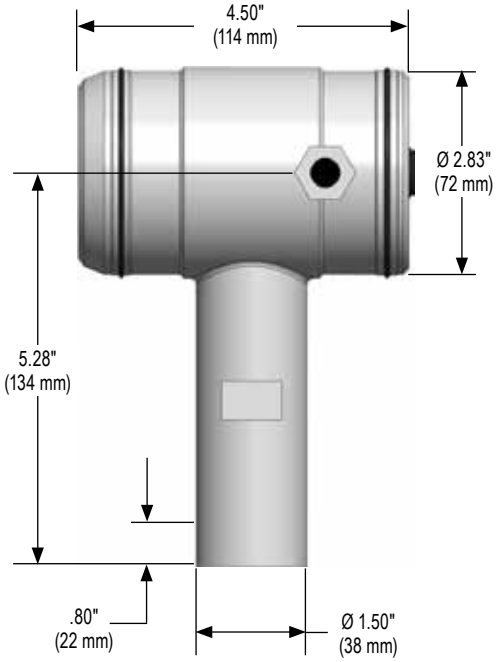

PTI30-73 (1" NPT Male)

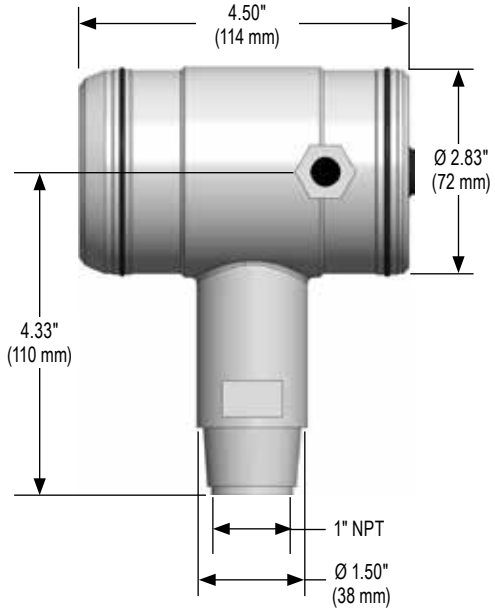

PTI30-76 (Flange)*

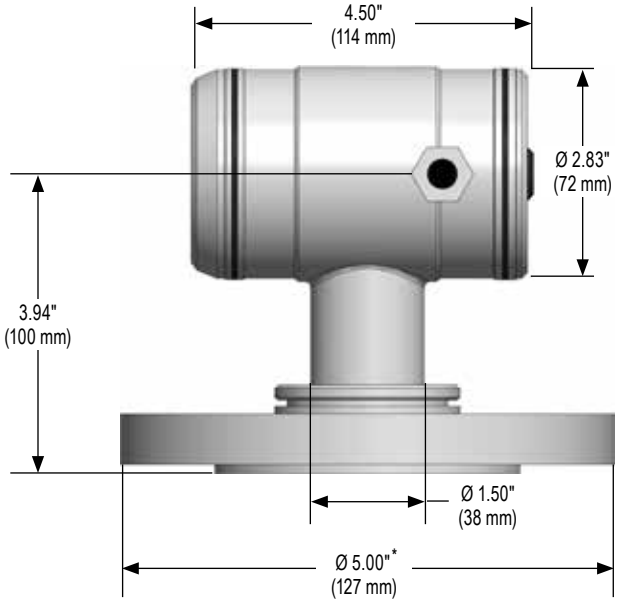

* Dimensions for PTI30-77 (Flange) Ø 6.00" (152 mm)
* Dimensions for PTI30-78 (Flange) Ø 7.50" (190 mm)

PTI30-79 (1" PMC)

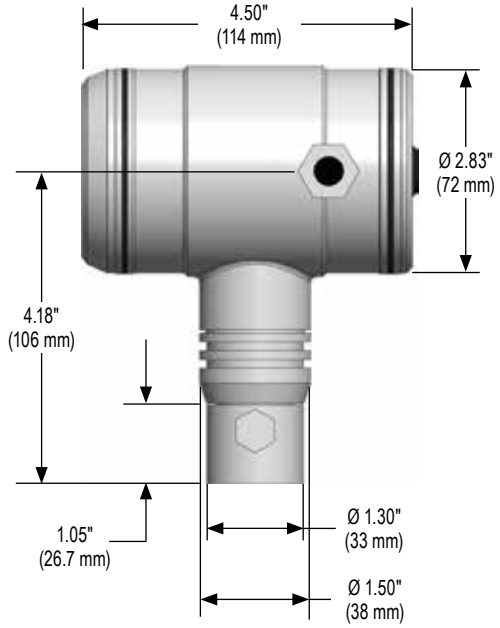

PTI30-80 (1-1/2" PMC)

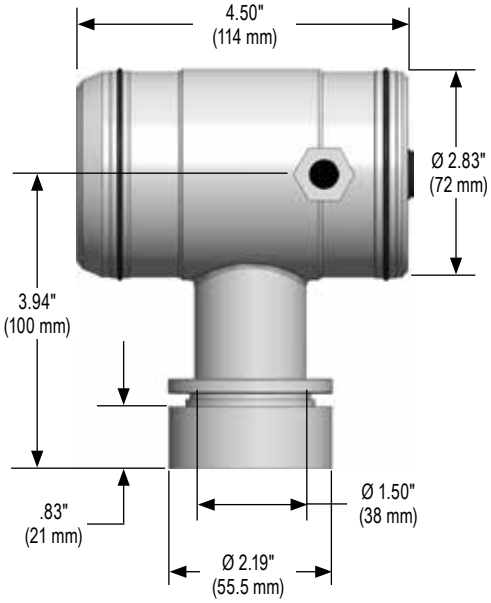

Premier Accuracy Intelligent CE

NOSHOK



PTI40 SERIES

- Adjustable pressure ranges 1 psid to 300 psid
- All ranges are user adjustable from vacuum to full scale with standard on board display
- 4 mA to 20 mA HART® pressure transmitter
- Accuracy ±0.075% of adusted span
- 100:1 turn down
- All Stainless Steel construction with 316 Stainless Steel wetted parts
- CE compliant to suppress RFI, EMI and ESD

APPLICATIONS

- General industrial
- Pulp & paper
- Water & wastewater
- Power generation
- Food & beverage

SPECIFICATIONS	
Output signals	4 mA to 20 mA 2-wire with HART®
Pressure ranges	0.15 psid to 300 psid
Accuracy	0.075% of adjusted span (Turn down up to 100:1)
Stability	<0.1%/year
Adjustment	By 1 push button joystick on display or HART® protocol
Static pressure	Max 2320 psi (160 bar) Optional 3625 psi (250 bar)
Response time	<200 ms
Service life	>10 years
Temperature ranges	Media -4 °F to 176 °F (-20 °C to 80 °C) Ambient -4 °F to 158 °F (-20 °C to 70 °C)
Power requirement*	12 Vdc to 36 Vdc
Measuring element	316 Stainless Steel (Hastelloy C or Gold plated optional)
Connection	316 Stainless Steel
Housing material	304 Stainless Steel (316 Stainless Steel optional)
Environmental rating	IP66 (IP68 optional)
Electromagnetic rating	CE compliant to EMC-Directive 2014/30/EU RFI, EMI and ESD protection
Weight	Approximately 6.9 lb.

* Unregulated

⚠ **WARNING:** This product can expose you to chemicals including Nickel, which are known to the State of California to cause cancer and birth defects or other reproductive harm. For more information go to www.P65Warnings.ca.gov.

Adaptive Industrial Solutions | sales@adaptiveind.com | (877) 818-5009

ORDERING INFORMATION				
SERIES	**PTI40**			
ADJUSTABLE PRESSURE RANGES	**1psid**	Min span 0.15 psi, max span 1 psi	**30psid**	Min span 0.3 psi, max span 30 psi
	6psid	Min span 0.15 psi, max span 6 psi	**300psid**	Min span 3 psi, max span 300 psi
	psid = differential gauge pressure	All ranges can be user scaled in vacuum or compound.		
ACCURACY	**1**	±0.075% of adusted span (100:1 turndown)		
OUTPUT SIGNALS	**43**	4 mA to 20 mA, 2-wire with HART®		
PROCESS CONNECTIONS	**81**	1/4" NPT Female, IEC 61518 flange with bleed valves		
ELECTRICAL CONNECTION	**28**	1/2" NPT Female		
OPTIONS	**TC**	Transparent Cover (for display)		

Please consult your local NOSHOK Distributor or NOSHOK, Inc. for availability and delivery information.

NOTE: Manifold and mounting options available, see NOSHOK Valve Product Solutions catalog

EXAMPLE

PTI40 – 6psid – 1 – 43 – 81 – 28 – TC

Series ..... PTI40 Series
Adjustable pressure range ..... Min span 0.15 psi, max span 6 psi
Accuracy ..... ±0.075% of adjusted span
Output signal ..... 4 mA to 20 mA, 2-wire with HART®
Process connection ..... 1/4" NPT female, IEC 61518 flange with bleed valves
Electrical connection ..... 1/2" NPT Female
Option ..... Transparent Cover

PTI40



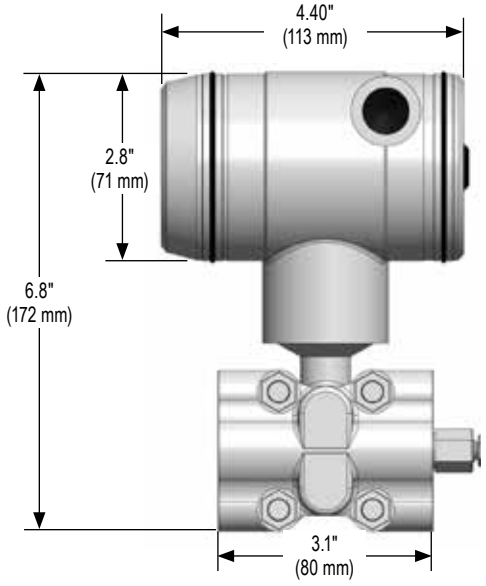

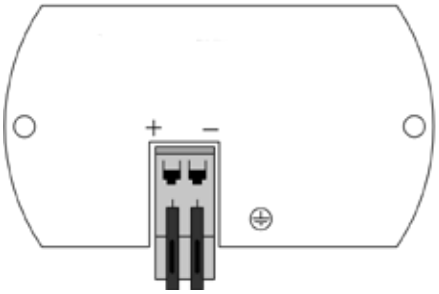

TERMINAL CONNECTION

1	Voltage supply/Output signal (4 mA to 20 mA)
2	Internal Ground

Radar Level Transmitter



LTI20 SERIES

- Continuous level measurement in containers and tanks
- Suitable for liquid, highly viscous and solid media
- Compact design for easy integration
- Can be installed outside a container (plastic)
- Suitable for industrial applications and mobile working machines

APPLICATIONS

- General Industrial
- Mobile Equipment
- Agriculture Equipment
- Water Treatment
- Pumping Stations
- Injection Molding Media

SPECIFICATIONS	
Output signals	4 mA to 20 mA, 3-wire 0 Vdc to 5 Vdc, 3-wire
Media dielectric constant	≥ 2
Measurement frequency	FMCW (60 GHz technology); frequency band 57.4 ... 61.4 GHz
Min measuring distance	4 in
Max measuring distance	300 in [25 ft] (additional distances available, consult factory)
Beam angle	±6°
Measuring frequency	> 1 Hz
Settling time	1 s Per IEC 62828-1
Switch-on time	<3 s
Accuracy parameters	±0.2 inches Per IEC 62828-4
Non-repeatability	≤ 0.079 in
Response time	4s
Temperature ranges	Media: Standard -40 °F to 212 °F (-40 °C to 100 °C) High Temp -40 °F to 302 °F (-40 °C to 150 °C) Ambient: -40 °F to 212 °F (-40 °C to 100 °C) Storage: -40 °F to 158 °F (-40 °C to 70 °C)
Power requirement	8 Vdc to 36 Vdc
Measuring element	PEEK (Lens) FKM (O-Ring)
Connection	316L Stainless Steel
Housing material	316L Stainless Steel
M12 electrical connection	Nickle-plated Brass, Nylon
Cable jacket material	PVC (Others available upon request)
Environmental rating	IP67
Electromagnetic rating	RFI, EMI and ESD protection
Electrical protection	Protected against reverse polarity, over-voltage and short circuit
Shock	100g, 11 ms per IEC 60068-2-27
Vibration (Short duration)	40 g's, 10 to 2,000 Hz per IEC 60068-2-6
Vibration (Long term)	10 g's, 10 to 2,000 Hz per IEC 60068-2-6
Max. operating pressure	362 psi (25 bar)
Weight	Approximately 2.8 oz.

⚠ **WARNING:** This product can expose you to chemicals including Lead and Nickel, which are known to the State of California to cause cancer and birth defects or other reproductive harm. For more information go to www.P65Warnings.ca.gov

ORDERING INFORMATION				
SERIES	LTI20	Radar level transmitter		
OUTPUT SIGNALS	36	4 mA to 20 mA, 3-wire	2	0 Vdc to 5 Vdc, 3-wire
PROCESS CONNECTIONS	8	1/2" NPT	86	G1/2 (DIN 3852-2-A)
ELECTRICAL CONNECTIONS	25	M12 x 1 (4-pin)	36	6' integral cable
OPTIONS	HT	High Temp (302 °F [150 °C] Media Temp)		

Please consult your local NOSHOK Distributor or NOSHOK, Inc. for availability and delivery information

EXAMPLE

LTI20 – 36 – 8 – 25

Series ..... LTI20 Series
Output signal ..... 4 mA to 20 mA, 3-wire
Process connection ..... 1/2" NPT
Electrical connection ..... M12 x 1 (4-pin)



Calibration in Empty Tank:

1. Install the sensor and connect the output signal
2. Hold the provided magnet to the marked position "CAL" on the label
3. Output signal will change to 1 mA (0 Vdc) (Magnet has been detected by the device)
4. Continue to hold the magnet in the marked position (approx. 10 seconds)
5. Output signal will change to 2.5 mA (2.5 Vdc) (Remove magnet)
6. Calibration process will be complete after approximately 5 seconds

LTI20-25-HT (M12 x 1 4-pin)

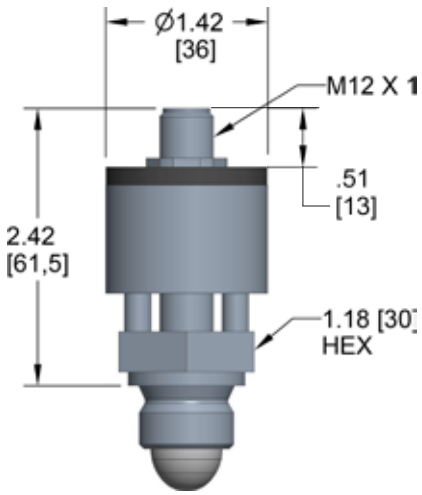

LTI20-25 (M12 x 1 4-pin)

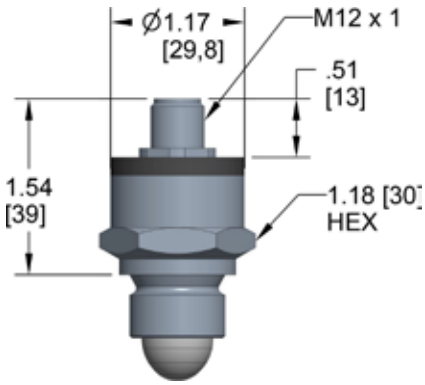

Dimensions

LTI20-36-HT (6' integral cable)

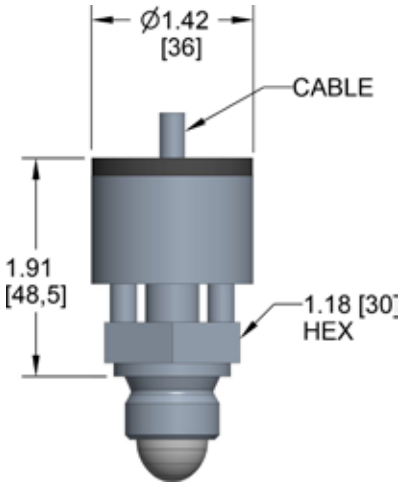

LTI20-36 (6' integral cable)

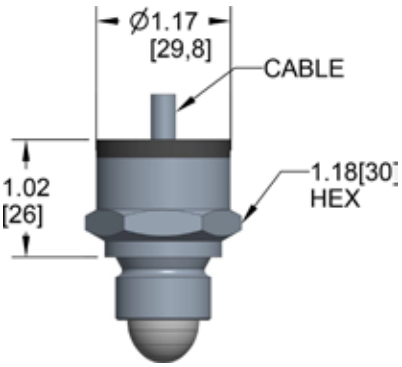

LTI20 Process Connections

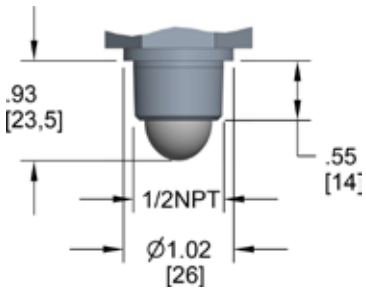

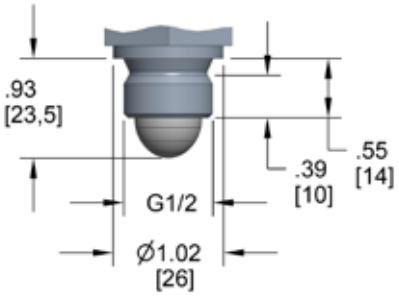

Small Diameter Submersible CE

NOSHOK



Shown with optional NPT conduit and optional FEP cable

611 SERIES

- Hydrostatic level measurement for use in applications including bore holes and wells with small diameters (outer diameter 0.87")
- Low power output signals for battery-powered applications, and optional temperature output available
- 5:1 turndown using optional HART® signal
- 316L Stainless Steel, PVDF and polyurethane wetted parts
- CE compliant to suppress RFI, EMI and ESD

APPLICATIONS

- Well head measurement
- Groundwater monitoring
- Level measurement in open bodies of water
- Sewage lift and pumping stations
- Settling ponds and rainwater basins

SPECIFICATIONS

Output signals	4 mA to 20 mA, 2-wire 4 mA to 20 mA + HART®, 2-wire 4 mA to 20 mA x 2 (pressure and temperature)* 0.1 Vdc to 2.5 Vdc, 3-wire 0.1 Vdc to 2.5 Vdc x 2 (pressure and temperature)*
Pressure ranges**	0 inH_2O to 50 inH_2O through 0 psig to 100 psig
Accuracy	± 1.0% of span (± 0.5% of span optional) Includes non-linearity, hysteresis, zero offset and end value deviation per IEC 61298-2 Accuracy after turndown via HART®, ≤ ±1.25% of scaled span (0.75% optional) Temperature sensor 14 °F to 176 °F (-10 °C to 80 °C): ≤ ± 3.3 °F
Stability	≤ ± 0.1% of span per year
Switch on time	Output signals without HART®: ≤150 ms Output signals with HART®: ≤250 ms
Settling time	Output signals without HART®: ≤100 ms Output signals with HART®: ≤250 ms
Durability	> 100,000,000 full scale cycles
Temperature ranges	Compensated 32 °F to 176 °F (0 °C to 80 °C) Effect ± 0.01%/ °F for zero and span Standard Media 14 °F to 122°F (-10 °C to 50 °C) Optional Media -40 °F to 176 °F (-40 °C to 80 °C) Storage -40 °F to 176 °F (-40 °C to 80 °C)
Power requirement***	4mA to 20 mA: 8 Vdc to 36 Vdc 4 mA to 20 mA and HART®: 12-36 Vdc 0.1 to 2.5 Vdc: 3.6 - 36 Vdc
Load limitations	4 mA to 20 mA: ≤ (Vpower - 8 V) / 0.022 A 4 mA to 20 mA and HART®: ≤ (Vpower - 9.6 V) / 0.022 A
Proof pressure	5 times range
Measuring element	Cap: PVDF Sensor: 316 stainless steel, optional Hastelloy C-276 Cable: Polyurethane, optional FEP
Connection	316 stainless steel
Housing material	316 stainless steel, 318 LN optional
Environmental rating	IP68
Electromagnetic rating	CE compliant to EMC norm EN 61326 RFI, EMI and ESD protection
Electrical protection	Reverse polarity protection, short circuit and resistance to overvoltage :DC 40V and increased overvoltage for lightning protection. Normal discharge current ≥10 kA, Rise time 8/20 µs
Max. submersion depth	325 ft./100 meters
Vibration	4 g's according to IEC 60068-2-6
Weight	Approximately 10.6 oz. with standard nosecone - cable .5 lb per 10 ft.

* Temperature measurement is based on the media temperature range
** Other ranges and measuring units available including bar, mbar, MPa, kPa, and m$H_2$0
*** Unregulated

⚠ **WARNING:** This product can expose you to chemicals including Lead and Nickel, which are known to the State of California to cause cancer and birth defects or other reproductive harm. For more information go to www.P65Warnings.ca.gov

ORDERING INFORMATION

SERIES	**611**			**611H**	318LN/Hastelloy C-276		
PRESSURE RANGES	**50 inH$_2$O**	0 inH$_2$O to 50 inH$_2$O	**5**	0 psig to 5 psig (11.5 ftH$_2$O)	**50**	0 psig to 50 psig (115 ftH$_2$O)	**100A** 0 psia to 100 psia
	100 inH$_2$O	0 inH$_2$O to 100 inH$_2$O	**10**	0 psig to 10 psig (23.1 ftH$_2$O)	**100**	0 psig to 100 psig (230.8 ftH$_2$O)	
	150 inH$_2$O	0 inH$_2$O to 150 inH$_2$O	**15**	0 psig to 15 psig (34.6 ftH$_2$O)	**25A**	0 psia to 25 psia	
	250 inH$_2$O	0 inH$_2$O to 250 inH$_2$O	**25**	0 psig to 25 psig (57.7 ftH$_2$O)	**50A**	0 psia to 50 psia	
	psig = gauge pressure	psia = absolute pressure	Other ranges and measuring units available on request				
ACCURACIES	**1**	±1.0 of span			**2**	±0.5% of span	
OUTPUT SIGNALS	**1**	4 mA to 20 mA, 2-wire			**48**	0.1 Vdc to 2.5 Vdc, 3 wire**	
	43	4 mA to 20 mA, 2-wire and HART® signal			**49**	0.1 Vdc to 2.5 Vdc x 2 (pressure and temperature) *, **	
	47	4 mA to 20 mA x 2 (pressure and temperature)*					
PROCESS CONNECTIONS	**N**	Nosecone			**W**	Weighted nosecone	
ELECTRICAL CONNECTIONS	**XX**	Standard polyurethane (PUR) cable			**62-XX**	Polyurethane (PUR) cable with 1/2" NPT conduit connection	
	38-XX	Optional FEP cable			**63-XX**	FEP cable with 1/2" NPT conduit connection	
		NOTE: XX = length of cable in feet					
OPTIONS	**CBC**	Cable Clamp	**LP**	Lightning Protection	**JB**	Cable Junction Box (NEMA 4X)	**HT** Increased media temperature (-40 °F to 176 °F)

Please consult your local NOSHOK Distributor or NOSHOK, Inc. for availability and delivery information.

* Temperature measurement is based on the media temperature range
** Low power is optimized for battery operation

EXAMPLE

611 – 5 – 1 – 1 – N – 50

Series ..... 611 Series
Pressure range ..... 0 psig to 5 psig
Accuracy ..... ±1.0 of span
Output signal ..... 4 mA to 20 mA, 2-wire
Process connection ..... Nosecone
Electrical connection ..... 50 feet of submersible polyurethane cable

WIRING CODE SCHEMATICS

	Wiring	Cable
4 mA to 20 mA & 4 mA to 20 mA,2-wire and Hart signal®	V+	Brown
	V-	Blue
	Case Ground	Grey
4 mA to 20 mA x 2 (pressure and temperature)	V+(pressure sensor)	Brown
	V- (pressure sensor)	Blue
	V+ (temperature sensor)	Green
	V- (temperature sensor)	White
	Case Ground	Grey
0.1 Vdc to 2.5 Vdc, 3 wire	V+	Brown
	Common	Blue
	Output	Black
	Case Ground	Grey
0.1 Vdc to 2.5 Vdc x 2 (pressure and temperature)	V+	Brown
	V-	Bue
	Output (pressure sensor)	Black
	Output (temperature sensor)	Green
	Case Ground	Grey

With protective cap

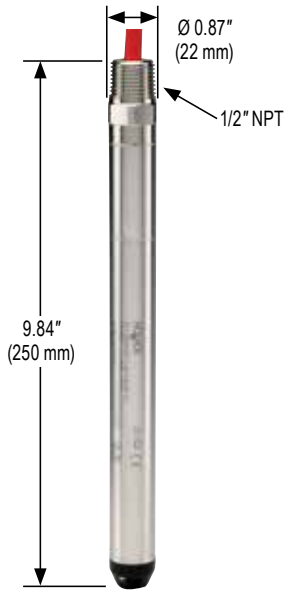

Protective Cap Thread M18 x 1

Submersible CE

NOSHOK



612 SERIES

- Ranges from 0 inH_2O to 50 inH_2O through 0 psig to 1,000 psig
- Current and voltage outputs available
- 316 Stainless Steel, polyamide and polyurethane wetted parts
- CE compliant to suppress RFI, EMI and ESD

APPLICATIONS

- Irrigation
- Tank monitoring
- Water & wastewater
- Well head measurement

SPECIFICATIONS	
Output signals	4 mA to 20 mA, 2-wire; 0 Vdc to 5 Vdc and 0 Vdc to 10 Vdc, 3-wire; 0.5 Vdc to 2.5 Vdc, 3-wire
Pressure ranges	0 inH_2O to 50 inH_2O through 0 psig to 1,000 psig
Accuracy	± 0.25% full scale (BFSL); optional ± 0.125% full scale (BFSL); (includes the effects of non-linearity, hysteresis, non-repeatability, zero point and full scale errors)
Stability	≤ ± 0.2% full scale for 1 year, non-accumulating
Response time	≤ 1 ms (between 10% and 90% full scale)
Service life	> 100,000,000 load cycles
Temperature ranges	Compensated 32 °F to 122 °F/0 °C to 50 °C Effect ± 0.01%/ °F for zero and span Media 14 °F to 122 °F / -10 °C to 50 °C Storage -22 °F to 175 °F/-30 °C to 80 °C
Power requirement*	10 Vdc to 30 Vdc (4 mA to 20 mA, 2-wire, 0 Vdc to 5 Vdc, 3-wire) 5 Vdc to 30 Vdc (0.5 Vdc to 2.5 Vdc, 3-wire) 14 Vdc to 30 Vdc (0 Vdc to 10 Vdc, 3-wire)
Load limitations	≤ (VPower-10)/0.020 Amp for 4 mA to 20 mA ≥ 10,000 Ω for 0 Vdc to 10 Vdc, 3-wire ≥ 5,000 Ω for 0 Vdc to 5 Vdc, 3-wire
Proof pressure	2 times range
Burst pressure	4 times range
Measuring element	Cap: Polyamide, 316 Stainless Steel with weighted nosecone Cable: Polyurethane, optional FEP or PVC with double water block
Connection	316 Stainless Steel
Housing material	316 Stainless Steel
Environmental rating	IP68
Electromagnetic rating	CE compliant to EMC norm EN 61326 RFI, EMI and ESD protection
Electrical protection	Reverse polarity protection, short circuit and optional lightning protection per EN 6100-4-5; 1.5J
Shock	100 g's according to IEC 60068-2-27
Vibration	15 g's according to IEC 60068-2-6
Weight	Approximately 7 oz. with standard nosecone - cable extra

* Unregulated

⚠ **WARNING:** This product can expose you to chemicals including Lead and Nickel, which are known to the State of California to cause cancer and birth defects or other reproductive harm. For more information go to www.P65Warnings.ca.gov

ORDERING INFORMATION

SERIES	**612**							
PRESSURE RANGES	**50 inH$_2$O**	0 inH$_2$O to 50 inH$_2$O	**2**	0 psig to 2 psig (4.6 ftH$_2$O)	**20**	0 psig to 20 psig (46.2 ftH$_2$O)	**200**	0 psig to 200 psig (461.3 ftH$_2$O)
	100 inH$_2$O	0 inH$_2$O to 100 inH$_2$O	**3**	0 psig to 3 psig (6.9 ftH$_2$O)	**25**	0 psig to 25 psig (57.7 ftH$_2$O)	**300**	0 psig to 300 psig (692.5 ftH$_2$O)
	150 inH$_2$O	0 inH$_2$O to 150 inH$_2$O	**5**	0 psig to 5 psig (11.5 ftH$_2$O)	**30**	0 psig to 30 psig (69.2 ftH$_2$O)	**350**	0 psig to 350 psig (807.9 ftH$_2$O) *
	200 inH$_2$O	0 inH$_2$O to 200 inH$_2$O	**10**	0 psig to 10 psig (23.1 ftH$_2$O)	**60**	0 psig to 60 psig (138.5 ftH$_2$O)	**500**	0 psig to 500 psig (1154.2 ftH$_2$O) *
	400 inH$_2$O	0 inH$_2$O to 400 inH$_2$O	**15**	0 psig to 15 psig (34.6 ftH$_2$O)	**100**	0 psig to 100 psig (230.8 ftH$_2$O)	**750**	0 psig to 750 psig (1733.3 ftH$_2$O) *
	psig = gauge pressure	Other ranges available on request			**150**	0 psig to 150 psig (346.3 ftH$_2$O)	**1000**	0 psig to 1,000 psig (2311.0 ftH$_2$O) *
ACCURACIES	**1**	±0.25% full scale (BFSL)			**2**	±0.125% full scale (BFSL)***		
OUTPUT SIGNALS	**1**	4 mA to 20 mA, 2-wire			**5**	0 Vdc to 10 Vdc, 3-wire		
	2	0 Vdc to 5 Vdc, 3-wire			**11**	0.5 Vdc to 2.5 Vdc, 3-wire		
PROCESS CONNECTIONS	**N**	Nosecone			**W**	Nosecone w/added weight (1.1 lb.)		
	T	G 1/2 B x 1/2″ NPT male with 1/4″ NPT female						
ELECTRICAL CONNECTIONS	**XX**	Standard polyurethane (PUR) cable			**38-XX**	Optional FEP cable		
	22-XX	Optional water-blocked PVC cable (>200 psi only)						
		NOTE: XX = length of cable in feet.						
OPTIONS	**PT1**	PT100 RTD **	**CBC**	Cable Clamp	**FE**	Filter Element		
	DC	Desiccant Cartridge	**LP**	Lightning Protection **	**JB**	Cable Junction Box		

Please consult your local NOSHOK Distributor or NOSHOK, Inc. for availability and delivery information.

* Only available with 4-20 mA output
** Not available for FEP/PVC cable or Water-Block PVC cable
*** Only available for ranges ≥ 5 psi

EXAMPLE

612 – 5 – 1 – 1 – N – 50

Series ..... 612 Series
Pressure range ..... 0 psig to 5 psig
Accuracy ..... ±0.25% full scale (BFSL)
Output signal ..... 4 mA to 20 mA, 2-wire
Process connection ..... Nosecone
Electrical connection ..... 50' of submersible polyurethane cable



Weighted nosecone

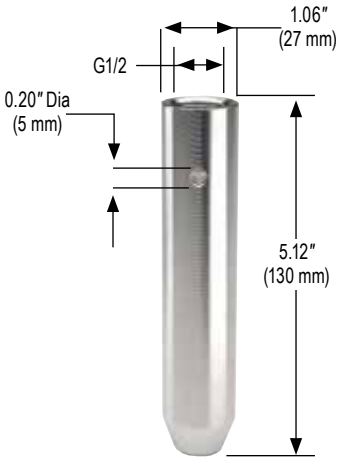

NPT adapter



612 Series Wiring	4 mA to 20 mA		
CONNECTION TYPE (CODE)	V+	V-	CASE GROUND
PUR Cable	Brown	Green	Gray
FEP Cable	Brown	White	Blue

612 Series Wiring	0-5 Vdc, 0-10 Vdc, 0.5 to 2.5 Vdc			
CONNECTION TYPE (CODE)	V+	COMMON	OUTPUT	CASE GROUND
PUR Cable	Brown	Green	White	Gray
FEP Cable	Brown	Green	White	Gray

Load Limitations 4 mA to 20 mA output		
Vmin	=	[10V + (.020 x RL)] - RC
RL	=	RS + RW
RL	=	Loop resistance (Ω)
RS	=	Sensor resistance (Ω)
RW	=	Wire resistance (Ω)
RC	=	0.0435 x cable length (ft.)

Cage-Protected Submersible



613 SERIES

- Ranges from 0 psi to 5 psi through 0 psi to 300 psi
- Current & voltage outputs available
- 316 Stainless Steel and polyurethane wetted parts

APPLICATIONS

- Lift stations
- Sewage
- Slurry tanks
- Storm canals
- Water & wastewater
- Wet wells

SPECIFICATIONS

Output signals	4 mA to 20 mA, 2-wire; 0 Vdc to 5 Vdc and 0 Vdc to 10 Vdc, 3-wire; 0.5 Vdc to 2.5 Vdc, 3-wire
Pressure ranges	0 psi to 5 psi through 0 psi to 300 psi
Accuracy	± 0.25% full scale (BFSL); optional ± 0.125% full scale (BFSL); (includes the effects of non-linearity, hysteresis, non-repeatability, zero point and full scale errors)
Stability	≤ ± 0.2% full scale for 1 year, non-accumulating
Response time	≤ 1 ms (between 10% and 90% full scale)
Service life	> 100,000,000 full scale cycles
Temperature measurement	Optional PT100, 4-wire per IEC 60751
Temperature ranges	Compensated 32 °F to 122 °F/0 °C to 50 °C Effect ± 0.01%/ °F for zero and span Media 14 °F to 122 °F / -10 °C to 50 °C Storage -22 °F to 175 °F/ -30 °C to 80 °C
Power requirement*	10 Vdc to 30 Vdc (4 mA to 20 mA, 2-wire, 0 Vdc to 5 Vdc, 3-wire) 5 Vdc to 30 Vdc (0.5 Vdc to 2.5 Vdc, 3-wire) 14 Vdc to 30 Vdc (0 Vdc to 10 Vdc, 3-wire)
Load limitations	≤ (VPower-10)/0.020 Amp for 4 mA to 20 mA ≥ 10,000 Ω for 0 Vdc to 10 Vdc, 3-wire ≥ 5,000 Ω for 0 Vdc to 5 Vdc, 3-wire
Proof pressure	2 times range
Burst pressure	4 times range
Measuring element	Cage seal: All 316 Stainless Steel Cable: Polyurethane, optional FEP
Connection	316 Stainless Steel
Housing material	316 Stainless Steel
Environmental rating	IP68
Electromagnetic rating	Built to suppress RFI, EMI and ESD protection
Electrical protection	Reverse polarity protection, short circuit and optional lightning protection per EN 6100-4-5; 1.5J
Shock	100 g's according to IEC 60068-2-27
Vibration	15 g's according to IEC 60068-2-6
Weight	Approximately 3.2 lb. - cable extra

* Unregulated

⚠ **WARNING:** This product can expose you to chemicals including Lead and Nickel, which are known to the State of California to cause cancer and birth defects or other reproductive harm. For more information go to www.P65Warnings.ca.gov

ORDERING INFORMATION

SERIES	**613**						
PRESSURE RANGES	**5**	0 psi to 5 psi (11.55 ft/H_2O)	**20**	0 psi to 20 psi (46.20 ft/H_2O)	**75**	0 psi to 75 psi (173.25 ft/H_2O)	**300** 0 psi to 300 psi (693 ft/H_2O)
	10	0 psi to 10 psi (23.10 ft/H_2O)	**30**	0 psi to 30 psi (69.30 ft/H_2O)	**100**	0 psi to 100 psi (231.00 ft/H_2O)	
	15	0 psi to 15 psi (34.65 ft/H_2O)	**50**	0 psi to 50 psi (115.50 ft/H_2O)	**150**	0 psi to 150 psi (346.50 ft/H_2O)	
ACCURACIES	**1**	±0.25% full scale (BFSL)			**2**	±0.125% full scale (BFSL)	
OUTPUT SIGNALS	**1**	4 mA to 20 mA, 2-wire			**5**	0 Vdc to 10 Vdc, 3-wire	
	2	0 Vdc to 5 Vdc, 3-wire			**11**	0.5 Vdc to 2.5 Vdc, 3-wire	
ELECTRICAL CONNECTIONS	**XX**	Standard polyurethane (PUR) cable **NOTE: XX = length of cable in feet.**			**38-XX**	Optional FEP cable	
OPTIONS	**CBC**	Cable Clamp	**FE**	Filter Element	**LP**	Lightning Protection *	**PT1** PT100 RTD *
	DC	Desiccant Cartridge	**JB**	Cable Junction Box	**LR**	Lifting Ring	

Please consult your local NOSHOK Distributor or NOSHOK, Inc. for availability and delivery information.

* Only available with PUR cable

EXAMPLE **613 – 5 – 1 – 1 – 50' – LR**

Series .....613 Series
Pressure range .....0 psi to 5 psi
Accuracy .....±0.25% full scale (BFSL)
Output signal ..... 4 mA to 20 mA, 2-wire
Electrical connection ..... 50' of submersible polyurethane cable
Option.....Lifting Ring

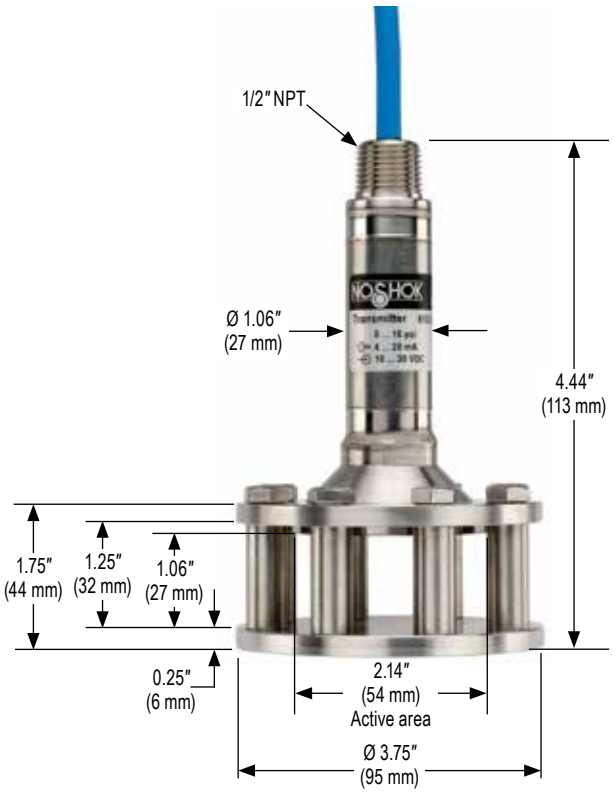



Optional Cable Clamp



Optional Cable Junction Box



Optional Desiccant Cartridge



Optional Filter Element



Optional Lifting Ring

613 Series Wiring	4 mA to 20 mA		
CONNECTION TYPE (CODE)	V+	V-	CASE GROUND
PUR Cable	Brown	Green	Gray
FEP Cable	Brown	White	Blue

613 Series Wiring	0-5 Vdc, 0-10 Vdc, 0.5 to 2.5 Vdc			
CONNECTION TYPE (CODE)	V+	COMMON	OUTPUT	CASE GROUND
PUR Cable	Brown	Green	White	Gray
FEP Cable	Brown	Green	White	Gray

Load Limitations 4 mA to 20 mA output		
Vmin	=	[10V + (.020 x RL)] - RC
RL	=	RS + RW
RL	=	Loop resistance (Ω)
RS	=	Sensor resistance (Ω)
RW	=	Wire resistance (Ω)
RC	=	0.0435 $\frac{\Omega}{FT}$ x cable length (ft.)

⚠ **WARNING:** This product can expose you to chemicals including Lead and Nickel, which are known to the State of California to cause cancer and birth defects or other reproductive harm. For more information go to www.P65Warnings.ca.gov

Precision Heavy-Duty CE

NOSHOK



640 SERIES

- Vacuum ranges through 0 psig to 15,000 psig; absolute ranges from 0 psia to 15 psia through 0 psia to 300 psia
- Standard 4 mA to 20 mA output
- 316 and 17-4PH Stainless Steel wetted parts
- CE compliant to suppress RFI, EMI and ESD

APPLICATIONS

- Aerospace equipment
- Laboratory & test equipment
- Precision measurement

SPECIFICATIONS

Output signals	4 mA to 20 mA, 2-wire; 0 Vdc to 5 Vdc and 0 Vdc to 10 Vdc, 3-wire
Pressure ranges	Vacuum through 0 psig to 15,000 psig Absolute from 0 to 15 psia through 0 psia to 300 psia
Accuracy	±0.05% full scale (BFSL); optional ±0.025% full scale (BFSL); (includes the effects of non-linearity, hysteresis, non-repeatability, zero point and full scale errors)
Stability	≤ ±0.1% full scale; 5 psi ±0.2% full scale per year
Response time	< 300 ms (between 10% to 90% full scale)
Service life	> 100,000,000 load cycles
Temperature ranges	Compensated 32 °F to 160 °F (0 °C to 70 °C) Effect: ±0.005% °F (32 °F to 50 °F) to zero point and pressure range no effect (50 °F to 104 °F) for zero and span ±0.005%/ °F (104 °F to 158 °F) to zero point and pressure range Media - 5 °F to 160 °F (-20 °C to 70 °C) Ambient 32 °F to 160 °F (0 °C to 70 °C) Storage -5 °F to 160 °F (-20 °C to 70 °C)
Power requirement*	9 Vdc to 30 Vdc (4 mA to 20 mA, 2-wire, 0 Vdc to 5 Vdc, 3-wire) 14 Vdc to 30 Vdc (0 Vdc to 10 Vdc, 3-wire) Voltage supply via RS232 interface (RS232)
Load limitations	≤ (VPower-10)/0.020 Amp for 4 mA to 20 mA ≥ 10,000 Ω for 0 Vdc to 10 Vdc, 3-wire ≥ 5,000 Ω for 0 Vdc to 5 Vdc, 3-wire
Proof pressure	3 times full scale for ranges 0 psi to 5 psi through 0 psi to 200 psi 2 times full scale for ranges 0 psi to 300 psi through 0 psi to 10,000 psi 1.5 times full scale for 0 psi to 15,000 psi
Burst pressure	4 times full scale for ranges 0 psi to 5 psi through 0 psi to 200 psi 4 times full scale for ranges 0 psi to 300 psi through 0 psi to 10,000 psi 3 times full scale for 0 psi to 15,000 psi
Measuring element	316 Stainless Steel for vacuum through 300 psi; 17-4PH Stainless Steel for ≥500 psi
Connection	316 Stainless Steel
Housing material	316 Stainless Steel
Environmental rating	IP65
Electromagnetic rating	CE compliant to EMC norm EN 61326:2014/A1:1998 RFI, EMI and ESD protection
Electrical protection	Reverse polarity, overvoltage and short circuit protection
Shock	100 g's according to IEC 60068-2-27
Vibration	15 g's according to IEC 60068-2-6
Weight	Approximately 11 oz.

* Unregulated

⚠ **WARNING:** This product can expose you to chemicals including Lead and Nickel, which are known to the State of California to cause cancer and birth defects or other reproductive harm. For more information go to www.P65Warnings.ca.gov

Adaptive Industrial Solutions | sales@adaptiveind.com | (877) 818-5009

ORDERING INFORMATION

SERIES	**640**										
PRESSURE RANGES	**30vac**	-30 inHg to 0 psig	**30/300**	-30 inHg to 300 psig	**150**	0 psig to 150 psig	**3000**	0 psig to 3,000 psig	**30A**	0 psia to 30 psia	
	30/15	-30 inHg to 15 psig	**5**	0 psig to 5 psig	**200**	0 psig to 200 psig	**5000**	0 psig to 5,000 psig	**60A**	0 psia to 60 psia	
	30/30	-30 inHg to 30 psig	**10**	0 psig to 10 psig	**300**	0 psig to 300 psig	**6000**	0 psig to 6,000 psig	**100A**	0 psia to 100 psia	
	30/60	-30 inHg to 60 psig	**15**	0 psig to 15 psig	**500**	0 psig to 500 psig	**7500**	0 psia to 7,500 psig	**150A**	0 psia to 150 psia	
	30/100	-30 inHg to 100 psig	**30**	0 psig to 30 psig	**750**	0 psig to 750 psig	**10000**	0 psia to 10,000 psig	**200A**	0 psia to 200 psia	
	30/150	-30 inHg to 150 psig	**60**	0 psig to 60 psig	**1000**	0 psig to 1,000 psig	**15000**	0 psia to 15,000 psig	**300A**	0 psia to 300 psia	
	30/200	-30 inHg to 200 psig	**100**	0 psig to 100 psig	**2000**	0 psig to 2,000 psig	**15A**	0 psia to 15 psia			
		psig = gauge pressure		psia = absolute pressure		Other ranges available on request					
ACCURACIES	**1**	±0.05% full scale (BFSL)			**2**	±0.025% full scale (BFSL)					
OUTPUT SIGNALS	**1**	4 mA to 20 mA, 2-wire analog			**5**	0 Vdc to 10 Vdc, 3-wire analog					
	2	0 Vdc to 5 Vdc, 3-wire analog									
PROCESS CONNECTIONS	**2**	1/4″ NPT male			**8**	1/2″ NPT male; other connections available upon request					
ELECTRICAL CONNECTIONS	**1**	54″ Integral cable			**25**	M12 x 1 (4-pin)					
OPTION	**ST8**	Threaded Orifice									

Please consult your local NOSHOK Distributor or NOSHOK, Inc. for availability and delivery information.

EXAMPLE **640 – 3000 – 1 – 1 – 8 – 25 – ST8**

Series .....640 Series
Pressure range .....0 psig to 3,000 psig
Accuracy .....±0.05% full scale (BFSL)
Output signal .....4 mA to 20 mA, 2-wire analog
Process connection .....1/2" NPT Male
Electrical connection .....M12 x 1 (4-pin)
Option ..... Threaded Orifice



640 Series Wiring	4 mA to 20 mA	
CONNECTION TYPE (CODE)	V+	V-
M12 x 1, 4-Pin (25)	1	3
Integral Cable (1)	Brown	Blue

640 Series Wiring	0-5 Vdc, 0-10 Vdc, 0-20 mA		
CONNECTION TYPE (CODE)	V+	COMMON	OUTPUT
M12 x 1, 4-Pin (25)	1	3	4
Integral Cable (1)	Brown	Blue	Black

Load Limitations 4 mA to 20 mA output		
Vmin	=	10V + (.020 x RL)
RL	=	Loop resistance (Ω) RL = RS + RW
RS	=	Sensor resistance (Ω)
RW		Wire resistance (Ω)

Micro-Size CE

NOSHOK



660 SERIES

- Ranges from 0 psig to 200 through 0 psig to 15,000 psig
- Current & voltage outputs available
- Stainless Steel wetted parts
- 1.0 mm standard orifice size for improved performance in dynamic applications
- CE compliant to suppress RFI, EMI and ESD

APPLICATIONS

- Hydraulics & pneumatics
- Mobile hydraulics
- Power generation
- Pumps & compressors
- Refrigeration controls

SPECIFICATIONS

Output signals	4 mA to 20 mA 2-wire, 1 Vdc to 5 Vdc 3-wire; 0.1 Vdc to 10 Vdc, 3-wire
Pressure ranges	0 psig to 200 psig through 0 psig to 15,000 psig
Accuracy	±0.25% full scale (BFSL); (Includes the effects of non-linearity, hysteresis, non-repeatability, zero point and full scale errors)
Stability	≤ ±2% full scale for 1 year, non-accumulating
Response time	<2 ms (between 10% and 90% full scale)
Service life	> 100,000,000 load cycles
Temperature ranges	Compensated -4 °F to 185 °F (-20 °C to 85 °C) Zero effect ±0.01% full scale/ °F Span effect ±0.01% full scale/ °F Media -13 °F to 185 °F (-40 °C to 100 °C); -40 °F to 257 °F (-40 °C to 125 °C) available on request Ambient -4 °F to 185 °F (-25 °C to 85 °C) Storage -40 °F to 212 °F (-40 °C to 100 °C)
Power requirement*	10 Vdc to 36 Vdc (4 mA to 20 mA, 2-wire) 8 Vdc to 36 Vdc (1 Vdc to 5 Vdc, 3-wire) 14 Vdc to 36 Vdc (0.1 Vdc to 10 Vdc, 3-wire)
Load limitations	≤ (VPower-10)/0.020 Amp for 4 mA to 20 mA ≥ 10,000 Ω for 1 Vdc to 10 Vdc, 3-wire ≥ 5,000 Ω for 1 Vdc to 5 Vdc, 3-wire
Proof pressure	2 times full scale for ranges 0 psi to 200 psi through 0 psi to 10,000 psi 1.5 times full scale for 0 psi to 15,000 psi range
Burst pressure	9 times full scale for 0 psi to 200 psi through 0 psi to 1,000 psi 3 times full scale for ranges 0 to 3,000 psi through 0 psi to 15,000 psi
Measuring element	17-4PH Stainless Steel
Connection	316 Stainless Steel
Housing material	316 Stainless Steel
Environmental rating	IP65; IP67 M12x1 electrical connection for pressure ranges 0 psig to 1,500 psig or higher
Electromagnetic rating	CE compliant to EMC norm EN 61326 RFI, EMI and ESD protection
Electrical protection	Reverse polarity, over-voltage and short circuit protection
Shock	1,000 g's according to IEC 60068-2-27
Vibration	20 g's according to IEC 60068-2-6
Weight	Approximately 1.75 oz.

* Unregulated

⚠ **WARNING:** This product can expose you to chemicals including Lead and Nickel, which are known to the State of California to cause cancer and birth defects or other reproductive harm. For more information go to www.P65Warnings.ca.gov

Adaptive Industrial Solutions | sales@adaptiveind.com | (877) 818-5009

ORDERING INFORMATION

SERIES	**660**						
PRESSURE RANGES	**200**	0 psig to 200 psig	**500**	0 psig to 500 psig	**3000**	0 psig to 3,000 psig	**10000**	0 psig to 10,000 psig
	300	0 psig to 300 psig	**1000**	0 psig to 1,000 psig	**5000**	0 psig to 5,000 psig	**15000**	0 psig to 15,000 psig
			psig = gauge pressure	Other ranges available on request				
ACCURACY	**1**	±0.25% full scale (BFSL)						
OUTPUT SIGNALS	**1**	4 mA to 20 mA, 2-wire	**3**	1 Vdc to 5 Vdc, 3-wire	**27**	0.1 Vdc to 10 Vdc, 3-wire		
PROCESS CONNECTIONS	**2**	1/4″ NPT male						
ELECTRICAL CONNECTIONS	**1**	DIN EN 175301-803 Form C w/ 36" Cable	**7**	DIN EN 175301-803 Form C			**25**	M12 x 1 (4-pin)

Please consult your local NOSHOK Distributor or NOSHOK, Inc. for availability and delivery information.

EXAMPLE **660 – 500 – 1 – 1 – 2 – 25**

Series .....660 Series
Pressure range .....0 psig to 500 psig
Accuracy .....±0.25% full scale (BFSL)
Output signal ..... 4 mA to 20 mA, 2-wire
Process connection .....1/4" NPT Male
Electrical connection .....M12 x 1 (4-pin)

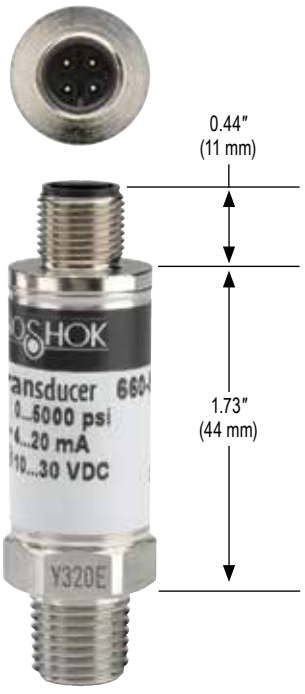

M12 x 1 (4-pin)



DIN EN 175301-803 Form C

660 Series Wiring	4 mA to 20 mA	
CONNECTION TYPE (CODE)	V+	V-
DIN EN 175301-803 Form C (7)	1	2
DIN EN 175301-803 Form C w/ Cable (1)	Red	Black
M12 x 1, 4-Pin (25)	1	3
Integral Cable (36)	Brown	Green

660 Series Wiring	1-5 Vdc, 0.1-10 Vdc		
CONNECTION TYPE (CODE)	V+	COMMON	OUTPUT
DIN EN 175301-803 Form C (7)	1	2	3
DIN EN 175301-803 Form C w/ Cable (1)	Red	Black	White
M12 x 1, 4-Pin (25)	1	3	4
Integral Cable (36)	Brown	Green	White

Load Limitations 4 mA to 20 mA output		
Vmin	=	10V + (.020 x RL)
RL	=	Loop resistance (Ω) RL = RS + RW
RS	=	Sensor resistance (Ω)
RW		Wire resistance (Ω)

Explosion-Proof

FM APPROVED

C SP US

NOSHOK



621/622 SERIES

- Vacuum and compound ranges through 0 psig to 15,000 psig; absolute ranges from 0 psia to 15 psia through 0 psia to 100 psia
- Current and voltage outputs available
- 316 Stainless Steel and Elgiloy wetted parts
- NACE MR0175/ISO 15156 compliant
- ANSI/ISA-12.27.01 approved single seal

APPLICATIONS

- Chemical processing
- Gas pressure measurement
- Oil field & offshore
- Mining
- Well head measurement

NOSHOK 621 and 622 Series transmitters are Factory Mutual and Canadian Standards Association approved for use in hazardous location applications as follows:
Explosion-proof with entity approved for: Class I, Division 1, Groups A, B, C and D. Dust Ignition-proof with entity approval for class II/III, Division 1, Groups E, F and G. Maximum electrical ratings 30V, 20 mA.
ANSI/ISA-12.27.01, Approved single seal.

SPECIFICATIONS

Output signals	4 mA to 20 mA, 2-wire; 1 Vdc to 5 Vdc, 3-wire; 0.5 Vdc to 4.5 Vdc, 3-wire	
Pressure ranges	Vacuum through 0 psi to 15,000 psi Absolute from 0 psia to 15 psia through 0 psia to 100 psia	
Accuracy	±0.25% full scale (BFSL) (Includes the effects of non-linearity, hysteresis, non-repeatability, zero point and full scale errors)	
Stability	≤±0.2% full scale for 1 year, non-accumulating	
Response time	≤1 ms (between 10% and 90% full scale)	
Service life	>100,000,000 load cycles	
Temperature ranges	Compensated Zero effect Span effect	32 °F to 176 °F (0 °C to 80 °C) ±0.011% full scale/ °F ±0.011% full scale/ °F
	Media	T6: -40 °F to 131 °F (-40 °C to 55 °C) T5: -40 °F to 158 °F (-40 °C to 70 °C) T4: -40 °F to 212 °F (-40 °C to 100 °C)
	Ambient	T6: -40 °F to 140 °F (-40 °C to 60 °C) T5: -40 °F to 167 °F (-40 °C to 75 °C) T4: -40 °F to 221 °F (-40 °C to 105 °C)
	Storage	-40 °F to 221 °F (-40 °C to 105 °C)
Power requirement*	10 Vdc to 30 Vdc (4 mA to 20 mA, 2-wire) 6 Vdc to 30 Vdc (1 Vdc to 5 Vdc, 3-wire) 5 Vdc to 30 Vdc (0.5 Vdc to 4.5 Vdc, 3-wire) 14 Vdc to 30 Vdc (0 Vdc to 10 Vdc, 3-wire)	
Load limitations	≤ (VPower-10)/0.020 Amp for 4 mA to 20 mA ≥ 10,000 Ω for 1 Vdc to 5 Vdc, 3-wire	
Proof pressure	3 times full scale for ranges 0 psi to 15 psi through 0 psi to 200 psi 1.75 times full scale for ranges 0 psi to 300 psi through 0 psi to 10,000 psi 1.5 times full scale for 0 psi to 15,000 psi	
Burst pressure	3.8 times full scale for ranges 0 psi to 15 psi through 0 psi to 200 psi 4 times full scale for ranges 0 psi to 300 psi through 0 psi to 10,000 psi 3 times full scale for 0 psi to 15,000 psi	
Measuring element	621 Series is 316 Stainless Steel for ranges up through 0 psi to 300 psi, 316 Stainless Steel with Elgiloy ranges 0 psig to 500 psig and higher; 622 Series is 316 Stainless Steel with NBR o-ring; (FKM o-ring optional)	
Connection	316 Stainless Steel	
Housing material	316 Stainless Steel	
Environmental rating	IP67/NEMA 4x	
Electromagnetic rating	RFI, EMI and ESD protection	
Electrical protection	Reverse polarity, over-voltage and short circuit protected	
Shock	1,000 g's according to IEC 60068-2-27	
Vibration	20 g's according to IEC 60068-2-6	
Weight	Approximately 12 oz.	

* Unregulated

⚠ **WARNING:** This product can expose you to chemicals including Lead and Nickel, which are known to the State of California to cause cancer and birth defects or other reproductive harm. For more information go to www.P65Warnings.ca.gov

ORDERING INFORMATION

SERIES	**621**	Stainless Steel threaded connection	**622**	316 Stainless Steel flush diaphragm	**622H**	Hastelloy C flush diaphragm	
PRESSURE RANGES	**30vac**	-30 inHg to 0 psig	**5**	0 psig to 5 psig	**300**	0 psig to 300 psig	**6000** 0 psig to 6,000 psig
	30/30	-30 inHg to 30 psig	**10**	0 psig to 10 psig	**500**	0 psig to 500 psig	**8000** 0 psig to 8,000 psig
	30/60	-30 inHg to 60 psig	**15**	0 psig to 15 psig	**1000**	0 psig to 1,000 psig	**10000** 0 psig to 10,000 psig
	30/100	-30 inHg to 100 psig	**30**	0 psig to 30 psig	**1500**	0 psig to 1,500 psig	**15000** 0 psig to 15,000 psig
	30/160	-30 inHg to 160 psig	**60**	0 psig to 60 psig	**2000**	0 psig to 2,000 psig	**15A** 0 psia to 15 psia
	30/200	-30 inHg to 200 psig	**100**	0 psig to 100 psig	**3000**	0 psig to 3,000 psig	**100A** 0 psia to 100 psia
	30/300	-30 inHg to 300 psig	**200**	0 psig to 200 psig	**5000**	0 psig to 5,000 psig	
	psig = gauge pressure	psia = absolute pressure	Other ranges available on request		**Note:** 622 Series is available for pressure ranges up to 0 psig to 8,000 psig		
ACCURACY	**1**	±0.25% full scale (BFSL)					
OUTPUT SIGNALS	**1**	4 mA to 20 mA, 2-wire	**3**	1 Vdc to 5 Vdc, 3-wire, low power	**31**	0.5 Vdc to 4.5 Vdc 3-wire, low power	
	2	0 Vdc to 5 Vdc, 3-wire	**5**	0 Vdc to 10 Vdc, 3-wire			
PROCESS CONNECTIONS	**2**	1/4″ NPT male	**11**	G 1/2 B *			
	8	1/2″ NPT male	**13**	G 1 B (622 Series only, <30 psig)			
ELECTRICAL CONNECTIONS	**6**	1/2″ NPT male conduit with 6′ integral cable			**37**	1/2″ NPT male conduit with 6′ flying leads with epoxy seal	
OPTIONS	**ST8**	Threaded Orifice (621 Series only)	**20**	20′ Cable/lead (attached to electrical connection 6 or 37)	**30**	30′ Cable/lead (attached to electrical connection 6)	

Please consult your local NOSHOK Distributor or NOSHOK, Inc. for availability and delivery information.

* 621 series G1/2B, 622 Series G ½ B Flush (≥30 psig).

EXAMPLE

621 – 500 – 1 – 1 – 8 – 6 – ST8

Series ..... 621 Series
Pressure range ..... 0 psig to 500 psig
Accuracy ..... ±0.25% full scale (BFSL)
Output signal ..... 4 mA to 20 mA, 2-wire
Process connection ..... 1/2" NPT Male
Electrical connection ..... 1/2" NPT Male conduit with 6' integral cable
Option ..... Threaded Orifice



Front flush process connections

For ranges 0 psi to 30 psi through 0 psi to 8,000 psi

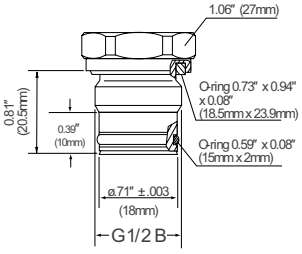

For ranges 0 to 30 psi and below

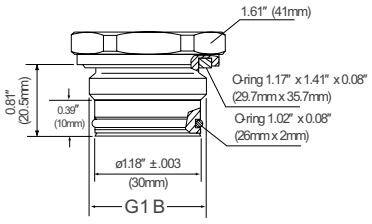

Flush corresponding port weld-on adapters

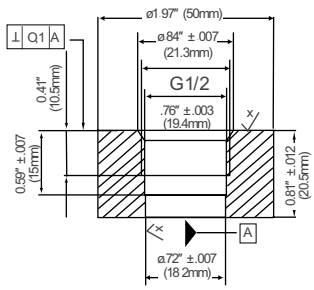

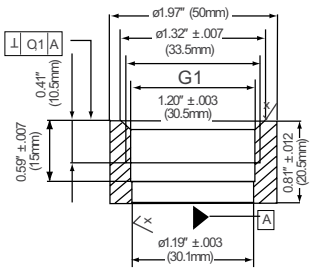

2-WIRE WIRING

V+	Red
V-	Black
Ground	Gray

3-WIRE WIRING

V+	Red
Common	Black
Output	Brown
Ground	Gray

Non-Incendive Pressure Transmitters



623/624 SERIES

- Vacuum and compound ranges through 0 psig to 15,000 psig; absolute ranges from 0 psia to 15 psia through 0 psia to 100 psia
- Current and voltage outputs available
- 316 Stainless Steel and Elgiloy wetted parts
- Factory Mutual and Canadian Standards Association approved
- NACE MR0175/ISO 15156 compliant
- ANSI/ISA-12.27.01 approved single seal

APPLICATIONS

- Chemical processing
- Gas pressure measurement
- Oil field & offshore
- Mining
- Well head measurement

NOSHOK 623 and 624 Series transmitters are Factory Mutual and Canadian Standards Association approved for use in hazardous location applications as follows:
Non-Incendive for: Class I, Division 2, Groups A, B, C and D.I.P; Class II, Division 1, Groups E, F and G Maximum ratings 30 Vdc, 20 mA.
ANSI/ISA-12.27.01, Approved single seal.

SPECIFICATIONS

Output signals	4 mA to 20 mA, 2-wire; 1 Vdc to 5 Vdc low power, 3-wire; 0.5 Vdc to 4.5 Vdc low power, 3-wire
Pressure ranges	Vacuum through 0 psig to 15,000 psig Absolute through 0 psia to 100 psia
Accuracy	±0.25% full scale (BFSL) (Includes the effects of non-linearity, hysteresis, non-repeatability, zero point and full scale errors)
Stability	≤ ±0.2% full scale for 1 year, non-accumulating
Response time	≤1 ms (between 10% and 90% full scale)
Service life	>100,000,000 load cycles
Temperature ranges	Compensated 32 °F to 176 °F (0 °C to 80 °C) Zero effect is ±0.011% full scale/ °F within compensated range Span effect is ±0.011% full scale/ °F within compensated range Media -40 °F to 212 °F (-40 to 100 °C) Ambient -22 °F to 176 °F (-30 °C to 80 °C) Storage -22 °F to 212 °F (-30 °C to 100 °C)
Power requirement*	10 Vdc to 30 Vdc (4 mA to 20 mA, 2-wire) 6 Vdc to 30 Vdc (1 Vdc to 5 Vdc, 3-wire, 0.5 Vdc to 4.5 Vdc, 3-wire) 14 Vdc to 30 Vdc (0 Vdc to 10 Vdc, 3-wire)
Load limitations	≤ (VPower -10)/0.020 Amp for 4 mA to 20 mA; ≥ 10,000 Ω for 1 Vdc to 5 Vdc, 3-wire
Proof pressure	3 times full scale for ranges 0 psi to 15 psi through 0 psi to 200 psi 1.75 times full scale for ranges 0 psi to 300 psi through 0 psi to 10,000 psi 1.5 times full scale for 0 psi to 15,000 psi range
Burst pressure	3.8 times full scale for ranges 0 psi to 15 psi through 0 psi to 200 psi 4 times full scale for ranges 0 psi to 300 psi through 0 psi to 10,000 psi 3 times full scale for 0 psi to 15,000 psi
Measuring element	623 Series is 316 Stainless Steel for ranges up through 0 psi to 300 psi, 316 Stainless Steel and Elgiloy for ranges 0 psig to 500 psig and higher; 624 Series is 316 Stainless Steel with NBR o-ring; FKM o-ring optional
Connection	316 Stainless Steel
Housing material	316 Stainless Steel
Environmental rating	IP67/NEMA 4x
Electromagnetic rating	Built to suppress RFI, EMI and ESD protection
Electrical protection	Reverse polarity, over-voltage and short circuit protected
Shock	1000 g's according to IEC 60068-2-27
Vibration	20 g's according to IEC 60068-2-6
Weight	Approximately 12 oz.

* Unregulated

WARNING: This product can expose you to chemicals including Lead and Nickel, which are known to the State of California to cause cancer and birth defects or other reproductive harm. For more information go to www.P65Warnings.ca.gov

Adaptive Industrial Solutions | sales@adaptiveind.com | (877) 818-5009

ORDERING INFORMATION

SERIES	**623**	Stainless Steel threaded connection			**624**	316 Stainless Steel flush diaphragm *	
PRESSURE RANGES	**30vac**	-30 inHg to 0 psig	**30**	0 psig to 30 psig	**500**	0 psig to 500 psig	**6000** 0 psig to 6,000 psig
	30/30	-30 inHg to 30 psig	**60**	0 psig to 60 psig	**1000**	0 psig to 1,000 psig	**8000** 0 psig to 8,000 psig
	30/60	-30 inHg to 60 psig	**100**	0 psig to 100 psig	**1500**	0 psig to 1,500 psig	**10000** 0 psig to 10,000 psig
	30/100	-30 inHg to 100 psig	**200**	0 psig to 200 psig	**2000**	0 psig to 2,000 psig	**15000** 0 psig to 15,000 psig
	15	0 psig to 15 psig	**300**	0 psig to 300 psig	**3000**	0 psig to 3,000 psig	**15A** 0 psia to 15 psia
					5000	0 psig to 5,000 psig	**100A** 0 psia to 100 psia
	psig = gauge pressure psia = absolute pressure		Other ranges available on request		**Note:** 624 Series is available for pressure ranges up to 0 psig to 8,000 psig		
ACCURACY	**1**	±0.25% full scale (BFSL)					
OUTPUT SIGNALS	**1**	4 mA to 20 mA, 2-wire	**3**	1 Vdc to 5 Vdc, 3-wire, low power	**31**	0.5 Vdc to 4.5 Vdc, 3-wire, low power	
PROCESS CONNECTIONS	**2**	1/4″ NPT male	**11**	G 1/2 B **			
	8	1/2″ NPT male	**13**	G 1 B (624 Series only, <30 psig)			
ELECTRICAL CONNECTION	**6**	1/2″ NPT male conduit with 6′ integral cable					
OPTION	**ST8**	Threaded Orifice (623 Series only)					

Please consult your local NOSHOK Distributor or NOSHOK, Inc. for availability and delivery information.

* Hastelloy flush diaphragm available upon request.
** 623 series G1/2B, 624 Series G ½ B Flush (≥30 psig).

EXAMPLE

623 – 500 – 1 – 1 – 8 – 6 – ST8

Series .....623 Series
Pressure range .....0 psig to 500 psig
Accuracy .....±0.25% full scale (BFSL)
Output signal .....4 mA to 20 mA, 2-wire
Process connection .....1/2" NPT Male
Electrical connection .....1/2" NPT Male conduit with 6' integral cable
Option..... Threaded Orifice

Front flush process connections

For ranges 0 psi to 30 psi through 0 psi to 8,000 psi

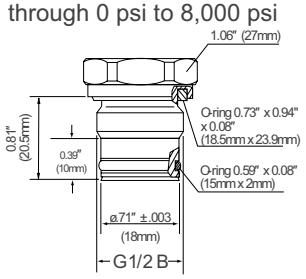

For ranges 0 to 30 psi and below

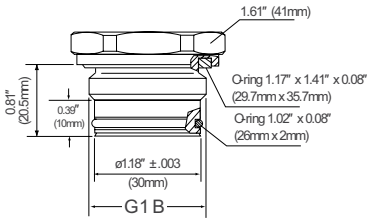

Flush corresponding port weld-on adapters

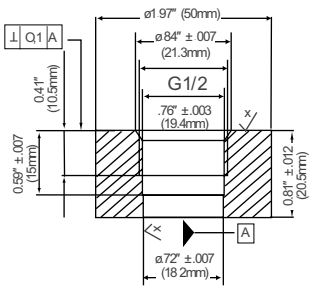

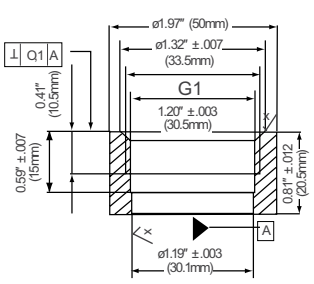

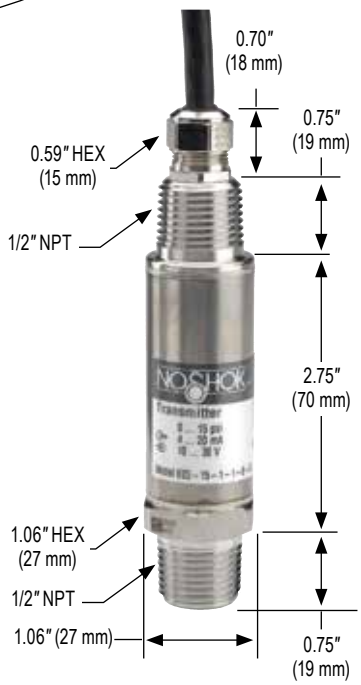

2-WIRE WIRING

V+	Brown
V-	Green

3-WIRE WIRING

V+	Brown
Common	Green
Output	White



625/626 SERIES

- Low pressure ranges for vapor recovery applications, vacuum and compound ranges through 0 psig to 15,000 psig; absolute ranges from 0 psia to 15 psia through 0 psia to 300 psia
- Current output
- 316 and 13-8PH Stainless Steel wetted parts
- Factory Mutual and Canadian Standards Association approved
- ANSI/ISA-12.27.01 approved single seal

APPLICATIONS

- Chemical processing
- Gas pressure measurement
- Oil field & offshore
- Mining
- Vapory recovery systems
- Well head measurement

NOSHOK 625 and 626 Series transmitters are Factory Mutual and Canadian Standards Association approved for use in hazardous location applications as follows:
Intrinsically Safe, entity approval for Class I, II and III, Division 1, Groups A, B, C, D, E, F and G; and Class I, Zone 0 Aex ia IIC
Dust Ignition-proof for Class II and III, Division 2, Groups F and G
Non-incendive for Class I, Division 2, Groups A, B, C and D.
ANSI/ISA-12.27.01, Approved single seal.

SPECIFICATIONS

Output signal	4 mA to 20 mA, 2-wire
Pressure ranges	Vacuum through 0 psig to 15,000 psig Absolute from 0 psia to 15 psia through 0 psia to 300 psia
Accuracy	±0.25% full scale (BFSL); optional ±0.125% full scale (BFSL) (Includes the effects of non-linearity, hysteresis, non-repeatability, zero point and full scale errors)
Stability	≤ ±0.2% full scale for 1 year, non-accumulating
Adjustment	± 10% full scale for zero and span
Response time	≤ 1 ms (between 10% and 90% full scale)
Service life	> 100,000,000 load cycles
Temperature ranges	Compensated 32 °F to 176 °F (0 °C to 80 °C) Zero effect is ±0.011% full scale/ °F Span effect is ±0.011% full scale/ °F Media -4 °F to 185 °F (-20 °C to 85 °C) Ambient -4 °F to 176 °F (-20 °C to 80 °C) Storage -22 °F to 221 °F (-30 °C to 105 °C)
Power requirement*	10 Vdc to 30 Vdc (4 mA to 20 mA, 2-wire)
Load limitations	≤ (VPower-10)/0.020 Amp
Proof pressure	3.5 times full scale for ranges 0 psi to 5 psi through 0 psi to 200 psi 2 times full scale for ranges 0 psi to 300 psi through 0 psi to 10,000 psi 1.5 times full scale for 0 psi to 15,000 psi
Burst pressure	4 times full scale for ranges 0 psi to 5 psi through 0 psi to 200 psi 4 times full scale for ranges 0 psi to 300 psi through 0 psi to 10,000 psi 3 times full scale for 0 psi to 15,000 psi
Measuring element	625 Series is 316 Stainless Steel for ranges up through 0 psi to 300 psi, 316 Stainless Steel with 13-8PH Stainless Steel for ≥300 psi; 626 Series is 316 Stainless Steel with NBR o-ring
Connection	316 Stainless Steel
Housing material	316 Stainless Steel
Environmental rating	IP65 to IP67 depending upon electrical connection
Electromagnetic rating	Built to suppress RFI, EMI and ESD protection
Electrical protection	Reverse polarity, over-voltage and short circuit protected
Shock	1,000 g's according to IEC 60068-2-27
Vibration	20 g's according to IEC 60068-2-6
Weight	Approximately 7 oz.

* Unregulated

⚠ **WARNING:** This product can expose you to chemicals including Lead and Nickel, which are known to the State of California to cause cancer and birth defects or other reproductive harm. For more information go to www.P65Warnings.ca.gov

ORDERING INFORMATION

SERIES	**625**	Stainless Steel threaded connection			**626**	316 Stainless Steel flush diaphragm			**626H**	Hastelloy flush diaphragm
PRESSURE RANGES	**4/12 oz/in²**	-4 oz/in² to 12 oz/in²	**30/100**	-30 inHg to 100 psig	**150**	0 psig to 150 psig	**5000**	0 psig to 5,000 psig	**100A**	0 psia to 100 psia
	12 oz/in²	0 oz/in² to 12 oz/in²	**30/150**	-30 inHg to 150 psig	**200**	0 psig to 200 psig	**6000**	0 psig to 6,000 psig	**150A**	0 psia to 150 psia
	16 oz/in²	0 oz/in² to 16 oz/in²	**30/200**	-30 inHg to 200 psig	**300**	0 psig to 300 psig	**7500**	0 psig to 7,500 psig	**200A**	0 psia to 200 psia
	50 inH$_2$O	0 inH$_2$O to 50 inH$_2$O	**3**	0 psig to 3 psig	**500**	0 psig to 500 psig	**8000**	0 psig to 8,000 psig	**250A**	0 psia to 250 psia
	100 inH$_2$O	0 inH$_2$O to 100 inH$_2$O	**5**	0 psig to 5 psig	**750**	0 psig to 750 psig	**10000**	0 psig to 10,000 psig		
	30vac	-30 inHg to 0 psig	**15**	0 psig to 15 psig	**1000**	0 psig to 1,000 psig	**15000**	0 psig to 15,000 psig		
	30/15	-30 inHg to 15 psig	**30**	0 psig to 30 psig	**1500**	0 psig to 1,500 psig	**15A**	0 psia to 15 psia		
	30/30	-30 inHg to 30 psig	**60**	0 psig to 60 psig	**2000**	0 psig to 2,000 psig	**30A**	0 psia to 30 psia		
	30/60	-30 inHg to 60 psig	**100**	0 psig to 100 psig	**3000**	0 psig to 3,000 psig	**60A**	0 psia to 60 psia		
	psig = gauge pressure	psia = absolute pressure	Other ranges available on request		**Note:** 626 Series is available for pressure ranges up to 0 psig to 8,000 psig					
ACCURACY	**1**	±0.25% full scale (BFSL)			**2**	±0.125% full scale (BFSL)				
OUTPUT SIGNAL	**1**	4 mA to 20 mA, 2-wire								
PROCESS CONNECTIONS	**2**	1/4″ NPT male			**13**	G 1 B (626 Series only, <30 psig)				
	8	1/2″ NPT male			**45**	7/16-20 SAE J514 FIG 34B (Non-Adjustable)				
	11	G 1/2 B *								
ELECTRICAL CONNECTIONS	**1**	DIN EN 175301-803 Form A w/ 36" Cable			**14**	DIN EN 175301-803 Form A with 1/2" NPT female conduit – IP65				
	3	6-pin Bayonet - IP65			**25**	M12x1 (4-pin) IP67				
	8	DIN EN 175301-803 Form A			**36**	Integral cable 36" - IP67				
OPTION	**ST8**	Threaded Orifice (625 Series only)								

Please consult your local NOSHOK Distributor or NOSHOK, Inc. for availability and delivery information.

* 626 Series only, G 1/2 B Flush (≥ 30 psig).

EXAMPLE **625 – 500 – 1 – 1 – 8 – 8 – ST8**

Series ..... 625 Series
Pressure range ..... 0 psig to 500 psig
Accuracy ..... ±0.25% full scale (BFSL)
Output signal ..... 4 mA to 20 mA, 2-wire
Process connection ..... 1/2" NPT Male
Electrical connection ..... DIN EN 175301-803 Form A
Option ..... Threaded Orifice

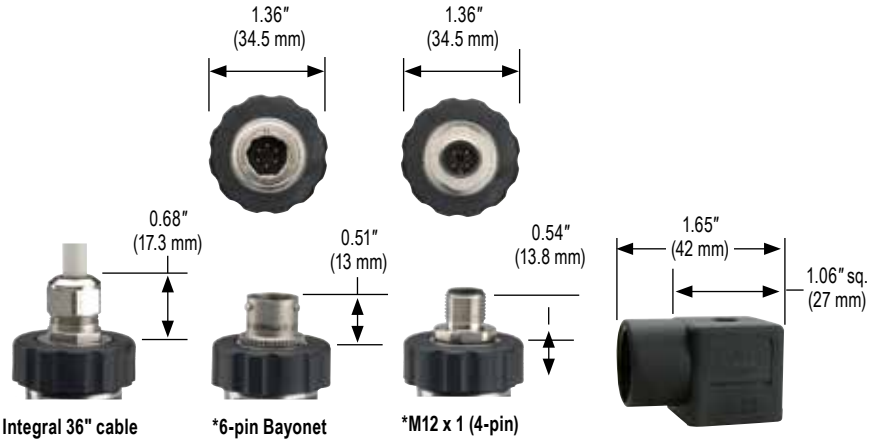

Integral 36" cable | ***6-pin Bayonet** | ***M12 x 1 (4-pin)**

***Note: mate supplied separately**

DIN EN 175301-803 Form A with 1/2" NPT female conduit



DIN EN 175301-803 Form A

2-WIRE WIRING

	DIN EN 175301-803 Form A	Cable	M12	Bayonet
V+	1	Red/Brown	1	A
V-	2	Black/Green	3	B

NOTE
See 621/622 Series for G1/2B and G1B Front Flush Process Connection Dimensions pg. 85

Intrinsically Safe Submersible



627 SERIES

- Ranges from 0 inH_2O to 50 inH_2O through 0 psig to 350 psig
- Current output
- 316 Stainless and 17-4PH Steel wetted parts
- Canadian Standards Association approved
- RFI, EMI, and ESD protection

APPLICATIONS

- Irrigation
- Tank monitoring
- Water & wastewater
- Well head measurement

SPECIFICATIONS	
Output signal	4 mA to 20 mA, 2-wire
Pressure ranges	0 inH_2O to 50 inH_2O through 0 psig to 350 psig
Accuracy	±0.25 % full scale (BFSL); optional ±0.125% full scale (BFSL), for ranges ≥ 150 inH_2O (Includes the effects of non-linearity, hysteresis, non-repeatability, zero point and full scale errors)
Stability	≤ ±0.2% full scale for 1 year, non-accumulating
Response time	≤1 ms (between 10% and 90% full scale)
Service life	>100,000,000 load cycles
Temperature ranges	Compensated 32 °F to 122 °F (0 °C to 50 °C) Zero effect is ±0.011% full scale/ °F within compensated range Span effect is ±0.011% full scale/ °F within compensated range Media 14 °F to 140 °F (-10 °C to 60 °C) Ambient 14 °F to 140 °F (-10 °C to 60 °C) Storage 14 °F to 140 °F (-10 °C to 60 °C)
Power requirement*	10 Vdc to 30 Vdc (4 mA to 20 mA, 2-wire)
Load limitations	≤ (VPower-10)/0.020 Amp-(0.043 Ω x length of cable in feet)
Proof pressure	2 times range
Burst pressure	3 times range
Measuring element	Diaphragm and cap: 316 Stainless Steel 17-4PH Stainless Steel for 0 psig to 350 psig Cable: Polyurethane, optional FEP
Connection	316 Stainless Steel
Housing material	316 Stainless Steel
Environmental rating	IP68
Electromagnetic rating	EMC norm EN 61326 RFI, EMI and ESD protection
Electrical protection	Reverse polarity, over-voltage and short circuit protected
Weight	Approximately 7 oz. with standard nosecone - cable extra

* Unregulated

NOSHOK 627 Series transmitters are Canadian Standards Association approved for use in hazardous location applications as follows:
Intrinsically Safe, entity approval for Class I, II and III, Division 1, Groups A, B, C, D, E, F and G; and Class I, Zone 0 Aex ia IIC
Dust ignition-proof for Class II and III, Division 1, Groups E, F and G
Non-incendive for Class I, Division 2, Groups A, B, C and D
FMRC 3600, 3610, 3611, 3810 (including supplement #1),
ISA-S12.0. 01, IEC 60529 (including amendment #1).

⚠ **WARNING:** This product can expose you to chemicals including Lead and Nickel, which are known to the State of California to cause cancer and birth defects or other reproductive harm. For more information go to www.P65Warnings.ca.gov

Adaptive Industrial Solutions | sales@adaptiveind.com | (877) 818-5009

ORDERING INFORMATION

SERIES	**627**				
PRESSURE RANGES	**50inH$_2$O**	0 inH$_2$O to 50 inH$_2$O	**5**	0 psig to 5 psig (11.5 ftH$_2$O)	**100** 0 psig to 100 psig (230.7 ftH$_2$O)
	100inH$_2$O	0 inH$_2$O to 100 inH$_2$O	**10**	0 psig to 10 psig (23.1 ftH$_2$O)	**160** 0 psig to 160 psig (369.1 ftH$_2$O)
	150inH$_2$O	0 inH$_2$O to 150 inH$_2$O	**15**	0 psig to 15 psig (34.6 ftH$_2$O)	**200** 0 psig to 200 psig (461.3 ftH$_2$O)
	250inH$_2$O	0 inH$_2$O to 250 inH$_2$O	**25**	0 psig to 25 psig (57.7 ftH$_2$O)	**300** 0 psig to 300 psig (692.3 ftH$_2$O)
	400inH$_2$O	0 inH$_2$O to 400 inH$_2$O	**30**	0 psig to 30 psig (69.2 ftH$_2$O)	**350** 0 psig to 350 psig (807.3 ftH$_2$O)
			60	0 psig to 60 psig (138.4 ftH$_2$O)	
	psig = gauge pressure	inH$_2$O = inches of water	ftH$_2$O = feet of water	Other ranges available on request.	
ACCURACIES	**1**	±0.25% full scale (BFSL)	**2**	±0.125% full scale (BFSL) on ≥ 150 inH$_2$O	
OUTPUT SIGNAL	**1**	4 mA to 20 mA, 2-wire			
PROCESS CONNECTIONS	**N**	Stainless Steel nosecone	**W**	Stainless Steel weighted nosecone (1.1 lb.)	
	T	G 1/2 B x 1/2″ NPT male with 1/4″ NPT female			
ELECTRICAL CONNECTIONS	**XX**	Standard Polyurethane cable			
	38-XX	Optional FEP cable	**NOTE: XX = length of cable in feet**		
OPTIONS	**CBC**	Cable Clamp	**FE**	Filter Element	
	DC	Desiccant Cartridge	**JB**	Cable Junction Box	

Please consult your local NOSHOK Distributor or NOSHOK, Inc. for availability and delivery information.

EXAMPLE **627 – 350 – 1 – 1 – N – 300**

Series ..... 627 Series
Pressure range ..... 0 psig to 350 psig
Accuracy ..... ±0.25% full scale (BFSL)
Output signal ..... 4 mA to 20 mA, 2-wire
Process connection ..... Stainless Steel nosecone
Electrical connection .....300' of submersible Polyurethane cable



Weighted Nosecone

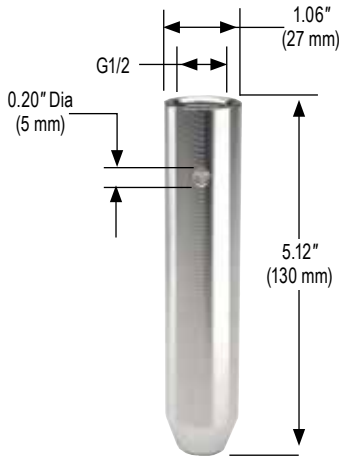

NPT Adapter

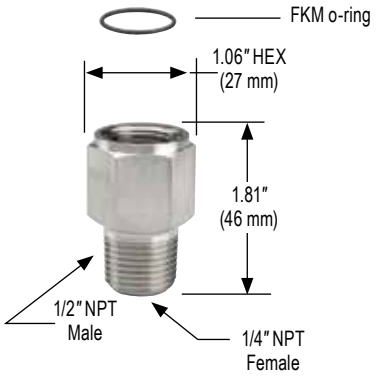

2-WIRE WIRING

V+	Brown
V-	Green
Shield	Gray

Intrinsically Safe Hammer Union



Shown with optional Electrical Connector Cage

628 SERIES

- Ranges from 0 psig to 5,000 psig through 0 psig to 20,000 psig
- Current output
- Inconel X-750 wetted parts
- Canadian Standards Association approved
- Every sensor comes with a Certificate of Calibration

APPLICATIONS

- Acidizing
- Choke & kill manifold
- Fracturing & cementing
- Mud logging & mud pumps
- Oil field & offshore
- Well head measurement

NOSHOK 628 Series transmitters are Canadian Standards Association approved for use in hazardous location applications as follows:
Intrinsically Safe Class I, DIV 1, Groups A,B,C,D, -40°C<Tamb<+85°C T4, Class II, DIV 1, Groups E,F,G, Class III, Class I, Zone 0 AEx/Ex ia IIC T4.
Non-Incendive Class I, DIV 2, Groups A,B,C,D, -40°C<Tamb<+85°C T4, Class II, DIV 2, Groups F,G, Class III, Class I, Zone 2 AEx/Ex ic IIC T4.

SPECIFICATIONS

Output signal	4 mA to 20 mA, 2-wire
Pressure ranges	0 psig to 5,000 psig through 0 psig to 20,000 psig
Accuracy	±0.25% full scale (BFSL) (Includes the effects of non-linearity, hysteresis, non-repeatability, zero point and full scale errors)
Stability	≤ ±0.2% full scale for 1 year, non-accumulating
Response time	< 2 m/s
Service life	> 10,000,000 load cycles
Temperature ranges	Compensated 40 °F to 140 °F (5 °C to 60 °C) Zero effect is ±0.01% full scale/ °F Span effect is ±0.01% reading/ °F Media -40 °F to 185 °F (-40 °C to 85 °C) Ambient -40 °F to 185 °F (-40 °C to 85 °C) Storage -40 °F to 185 °F (-40 °C to 85 °C)
Power requirement*	10 Vdc to 28 Vdc
Load limitations	≤ (VPower-10)/0.020 Amp
Proof pressure	1.5 times full scale (22,500 psi maximum)
Burst pressure	3 times full scale (22,500 psi maximum)
Measuring element	Inconel X-750
Connection	Inconel X-750
Housing material	316 Stainless Steel
Environmental rating	IP67 depending upon electrical connection
Electromagnetic rating	RFI, EMI and ESD protection
Electrical protection	Reverse polarity, over-voltage and short circuit protected
Shock	100 g's according to IEC 60068-2-27
Vibration	15 g's according to IEC 60068-2-6
Weight	Approximately 6 lb.

* Unregulated

⚠ **WARNING:** This product can expose you to chemicals including Lead and Nickel, which are known to the State of California to cause cancer and birth defects or other reproductive harm. For more information go to www.P65Warnings.ca.gov

Adaptive Industrial Solutions | sales@adaptiveind.com | (877) 818-5009

ORDERING INFORMATION

SERIES	**628**								
PRESSURE RANGES	**5000**	0 psig to 5,000 psig	**6000**	0 psig to 6,000 psig	**10000**	0 psig to 10,000 psig	**15000**	0 psig to 15,000 psig	**20000** 0 psig to 20,000 psig
ACCURACY	**1**	±0.25% full scale (BFSL)							
OUTPUT SIGNAL	**1**	4 mA to 20 mA, 2-wire							
WIRING CODE (See Wiring Code Schematics below)	**A** **C** **D**		**E** **F** **G**		**H** * **J**				
PROCESS CONNECTIONS	**14**	2" Wing union (#1502)							
ELECTRICAL CONNECTIONS	**3** **36**	6-pin Bayonet (MIL-C-26482) Integral cable with gland			**44**	4-pin (MIL-5015 Type)			
OPTION	**CH**	Carrying Handle			**EC**	Electrical Connector Cage			

Please consult your local NOSHOK Distributor or NOSHOK, Inc. for availability and delivery information.

* H is the standard wiring code.

EXAMPLE

628 – 5000 – 1 – 1 A – 14 – 3 – CH

Series .....628 Series
Pressure range .....0 psig to 5,000 psig
Accuracy ..... ±0.25% full scale
Output signal ..... 4 mA to 20 mA, 2-wire
Wiring code .....A
Process connection ..... 2" wing union (#1502)
Electrical connection .... 6-pin Bayonet (MIL-C-26482)
Option .....Carrying Handle

WIRING CODE SCHEMATICS

A	Pin A	V+	**E**	Pin A	V+	**G**	Pin B	V-	**J**	Pin A	V+
	Pin B	V-		Pin B	V-		Pin C	V+		Pin B	V-
	Pin E	Ground		Pin E	V+		Pin D	Ground		Pin C	- Shunt Cal
C	Red	V+		Pin F	- Shunt Cal	**H***	Pin A	V+		Pin D	+ Shunt Cal
	Black	V-	**F**	Pin A	V+		Pin B	V-		Pin E	CASE GROUND, NOT CONNECTED**
D	Red	V+		Pin B	V-		Pin D	Ground		Pin F	CASE GROUND, NOT CONNECTED**
	Black	V-		Pin C	+ Shunt Cal		Pin E	+ Shunt Cal			
	White	- Shunt Cal		Pin D	- Shunt Cal		Pin F	- Shunt Cal			
	Green	Ground		Pin E	Ground						

* H is the standard wiring code.

** No internal connection to E or F.

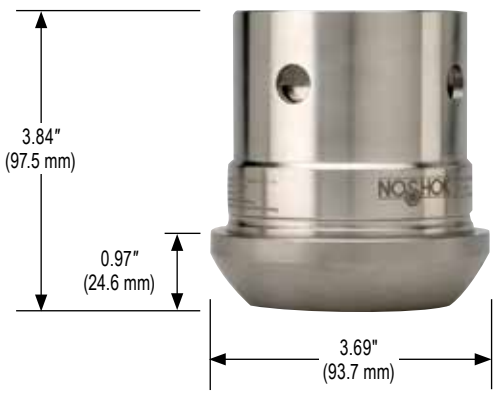



Optional Electrical Connector Cage

Sanitary Clamp



11 SERIES

- Ranges from vacuum through 0 psig to 400 psig
- Current and voltage outputs available
- 316 Stainless Steel wetted parts
- Can be cleaned-in-place (CIP) or steamed-in-place (SIP)
- Meets the requirements of 3-A
- CE compliant to suppress RFI, EMI and ESD

APPLICATIONS

- Food & beverage processing
- Pasteurization systems
- Pharmaceutical
- Medical

SPECIFICATIONS

Output signals	4 mA to 20 mA 2-wire, 0 Vdc to 5 Vdc 3-wire, 1 Vdc to 5 Vdc 3-wire, 1 Vdc to 6 Vdc 3-wire, 0 Vdc to 10 Vdc, 3-wire, 1 Vdc to 11 Vdc 3-wire
Pressure ranges	Vacuum through 0 psig to 400 psig
Accuracy	±0.25% full scale (BFSL); Optional ±0.125% full scale (BFSL); (Includes the effects of non-linearity, hysteresis, non-repeatability, zero point and full scale errors)
Stability	±0.2% full scale for 1 year, non-accumulating
Adjustment	±10% full scale for zero and span
Response time	< 10 ms
Service life	> 100,000,000 load cycles
Temperature ranges	Compensated 32 °F to 175 °F (0 °C to 80 °C) Effect ±0.01%/°F for zero and span Media -40 °F to 300 °F (-40 °C to 150 °C) Ambient -40 °F to 176 °F (-40 °C to 80 °C) Storage -40 °F to 212 °F (-40 °C to 100 °C)
Power requirement*	10 Vdc to 30 Vdc (4 mA to 20 mA, 2-wire, 0 Vdc to 5 Vdc, 3-wire, 1 Vdc to 5 Vdc, 3-wire, 1 Vdc to 6 Vdc, 3-wire) 14 Vdc to 30 Vdc (0 Vdc to 10 Vdc, 3-wire, Vdc to 11 Vdc, 3-wire)
Load limitations	≤ (VPower -10)/0.020 Amp for 4 mA to 20 mA output ≤ 5,000 Ω for 1 Vdc to 5 Vdc output ≤ 10,000 Ω for 0 Vdc to 10 Vdc output ≤ 4,500 Ω for 0.5 Vdc to 4.5 Vdc output
Proof pressure	3 times full scale for 0 psig to 2 psig through 0 psig to 200 psig 1.75 times full scale for 0 psig to 300 psig through 0 psig to 400 psig
Burst pressure	3.8 times full scale for 0 psig to 2 psig through 0 psig to 200 psig 4 times full scale for 0 psig to 300 psig through 0 psig to 400 psig
Measuring element	316 Stainless Steel
Connection	316 Stainless Steel
Housing material	316 Stainless Steel
Environmental rating	IP65
Electromagnetic rating	CE compliant to EMC norm EN 61326:2014/A1:1998 RFI, EMI and ESD protection
Electrical protection	Reverse polarity, overvoltage and short circuit protection
Shock	1,000 g's according to IEC 60068-2-27
Vibration	15 g's according to IEC 60068-2-6
Weight	Approximately 1.1 lb.

* Unregulated

Diaphragm seal must be installed facing downward or in a vertical position for drainability.
Do not intall diaphragm seal facing in an upward position.

WARNING: This product can expose you to chemicals including Lead and Nickel, which are known to the State of California to cause cancer and birth defects or other reproductive harm. For more information go to www.P65Warnings.ca.gov

Adaptive Industrial Solutions | sales@adaptiveind.com | (877) 818-5009

ORDERING INFORMATION

SERIES	**110**						
CLAMP SIZES	**12**	1-1/2″	**16**	2″			
SEAL FILL FLUID	**4**	FFL77 White oil	**Other food grade quality fill fluids available — please consult factory**				
TRANSDUCER	**615**	615 Series transducer					
ACCURACIES	**1**	±0.25% full scale (BFSL)	**2**	±0.125% full scale			
PRESSURE RANGES	**01**	-30 inHg to 0 psig	**16**	-30 inHg to 150 psig	**37**	0 psig to 10 psig	**55** 0 psig to 160 psig
	04	-30 inHg to 15 psig	**19**	-30 inHg to 200 psig	**40**	0 psig to 15 psig	**58** 0 psig to 200 psig
	07	-30 inHg to 30 psig	**22**	-30 inHg to 300 psig	**43**	0 psig to 30 psig	**61** 0 psig to 300 psig
	10	-30 inHg to 60 psig	**31**	0 psig to 100 inH_2O	**46**	0 psig to 60 psig	**64** 0 psig to 400 psig
	13	-30 inHg to 100 psig	**34**	0 psig to 5 psig	**49**	0 psig to 100 psig	
OUTPUT SIGNALS	**1**	4 mA to 20 mA, 2-wire	**3**	1 Vdc to 5 Vdc, 3-wire	**5**	0 Vdc to 10 Vdc, 3-wire	
	2	0 Vdc to 5 Vdc, 3-wire	**4**	1 Vdc to 6 Vdc, 3-wire	**6**	1 Vdc to 11 Vdc, 3-wire	
ELECTRICAL CONNECTIONS	**1**	DIN EN 175301-803 Form A w/ 36” Cable	**14**	DIN EN 175301-803 Form A with 1/2" NPT female conduit			
	3	6-pin Bayonet	**25**	M12 X 1 (4-pin)			
	8	DIN EN 175301-803 Form A	**36**	Integral 36″ cable			

Please consult your local NOSHOK Distributor or NOSHOK, Inc. for availability and delivery information.

EXAMPLE **110 – 12 – 4 – 615 – 1 – 34 – 1 – 1**

Series ..... 11 Series
Clamp size ..... 1-1/2" ASME-BPE Sanitary Clamp
Seal fill fluid ..... FFL77 White oil
Transmitter ..... 615 Series
Accuracy ..... ±0.25% full scale (BFSL)
Pressure range ..... 0 psig to 5 psig
Output signal ..... 4 mA to 20 mA, 2-wire
Electrical connection ... DIN EN 175301-803 Form A w/ 36” Cable

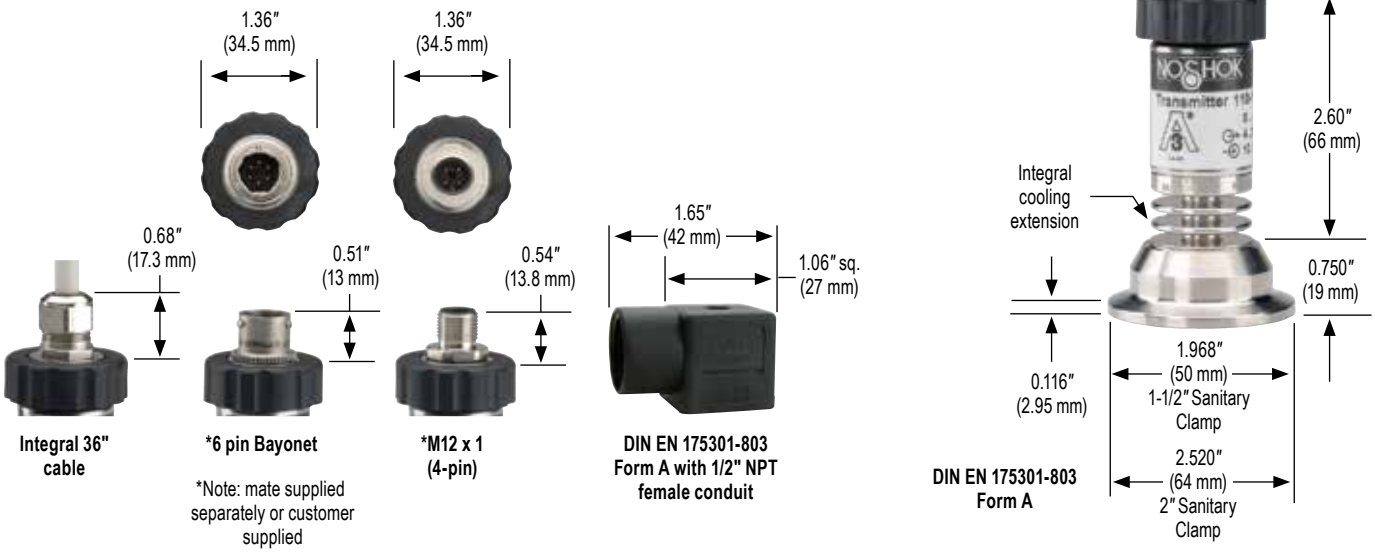

2-WIRE WIRING

	DIN EN 175301-803 Form A	Cable	M12	Bayonet
V+	1	Red	1	A
V-	2	Black	3	B

3-WIRE WIRING

	DIN EN 175301-803 Form A	Cable	M12	Bayonet
V+	1	Red	1	A
Common	2	Black	3	B
Output	3	White	4	C

Intelligent Silo and Tank Level Transmitter



20 SERIES

- Ranges from 16 inH_2O to 58 psig (1,600 inH_2O)
- Hart® protocol output available
- 316 Stainless Steel wetted parts
- Strong flush diaphragm with minimal fill volume
- Can be cleaned-in-place (CIP) or steamed-in-place (SIP)
- Meets the requirements of 3-A

HART COMMUNICATION PROTOCOL

APPLICATIONS

- Food & beverage
- Dairy
- Chemical processing
- Pharmaceutical

FEATURES & BENEFITS

- All Stainless Steel housing
- Easy programming and range adjustment without test pressure via on-board display
- Accuracy 0.1% of adjusted span
- 10:1 turn down
- Active temperature compensation
- Hart® protocol optional
- 360° rotatable display

SPECIFICATIONS

Output signals	4 mA to 20 mA 2-wire, 4 mA to 20 mA 2-wire and Hart® signal
Pressure ranges	16 inH_2O to 58 psig (1,600 inH_2O)
Accuracy	0.1% of adjusted span
Stability	<0.1%/year
Adjustment	By 3 push buttons on display or optional Hart® signal
Response time	<150 ms
Service life	>10 years
Temperature ranges	-4 °F to 212 °F (-20 °C to 100 °C); 293 °F (145 °C) for 45 min.
Power requirement*	12 Vdc to 36 Vdc
Measuring element	316 Stainless Steel (Hastelloy C, Tantalum or Goldplated optional)
Connection	316 Stainless Steel
Housing material	304 Stainless Steel
Environmental rating	IP66 (IP68 optional)
Electrical protection	IP66 (NEMA 4X), IP68 (NEMA 6) optional
Weight	Approximately 3.3 lb. (Depending on process connection)

* Unregulated

⚠ **WARNING:** This product can expose you to chemicals including Nickel, which are known to the State of California to cause cancer and birth defects or other reproductive harm. For more information go to www.P65Warnings.ca.gov.

ORDERING INFORMATION				
SERIES	**204**			
PROCESS CONNECTIONS	**90**	E&H Universal adapter short version	**95**	King Gage Standard - 6"
	91	E&H Universal adapter long version	**96**	King Gage Long - 8"
	92	Anderson Negele Type SL Short	**97**	Rosemount Tank Spud - 2"
	93	Anderson Negele Type SL Long - 6"	**98**	Rosemount Tank Spud - 6"
	94	King Gage Short	**99**	Tank Mate Medium - 6"
PRESSURE RANGES (Adjustable)*	**16/160 inH$_2$O**	16 inH$_2$O to 160 inH$_2$O (0.6 psig to 6 psig)	**6/58 psig**	6 psig to 58 psig (160 inH$_2$O to 1,600 inH$_2$O)
	47/470 inH$_2$O	47 inH$_2$O to to 470 inH$_2$O (1.7 psig to 17 psig)		
ACCURACIES	**1**	0.1% of adjusted span		
OUTPUT SIGNALS	**1**	4 mA to 20 mA, 2-wire	**43**	4 mA to 20 mA, 2-wire and Hart® signal
ELECTRICAL CONNECTIONS	**25**	M12 x 1 (4-pin)	**71**	PG9 Cable Gland
	28	1/2" NPT Female		
OPTIONS	**TC**	Transparent Cover (for display)		

Please consult your local NOSHOK Distributor or NOSHOK, Inc. for availability and delivery information.

*Other ranges available, consult factory

EXAMPLE

204 – 90 – 16/160 inH2O – 1 – 43 – 71 – TC

Series ..... 20 Series
Process connection ..... E&H Universal adapter short version
Pressure range ..... 16 inH$_2$O to 160 inH$_2$O
Accuracy ..... 0.1% of span
Output signal ..... 4 mA to 20 mA, 2-wire and Hart® signal
Electrical connection ..... PG9 Cable Gland
Option ..... Transparent Cover

M12 x 1 (4-PIN) WIRING

1	Brown	V+
2	White	V-
3	Blue	Not used
4	Black	Not used

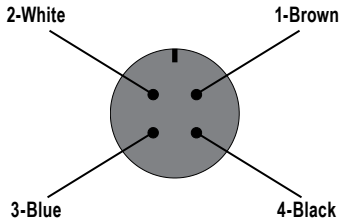

Dimensions

204-91 (E&H Universal adapter)

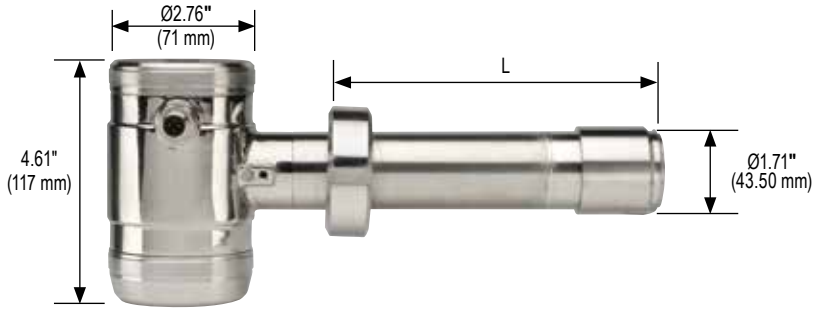

	L
Short	2.16" (54.86 mm)
Long	5.93" (150.50 mm)

204-93 (Anderson Negele Type SL)



	L
Short	2.05" (52.0 mm)
Long	6.36" (161.50 mm)

204-95 (King Gage)

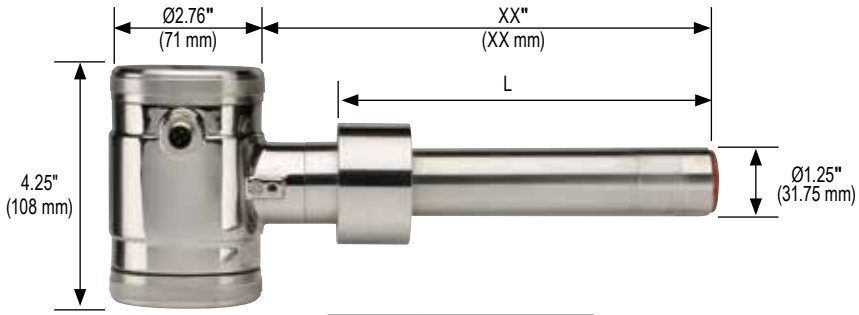

	L
Short	2.19" (55.63 mm)
Standard	6.62" (168.15 mm)
Long	8.81" (223.77 mm)

204-98 (Rosemount Tank Spud)

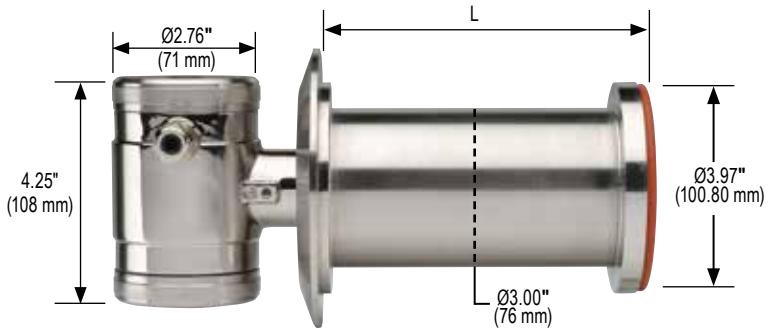

	L
Short	2.11" (53.58 mm)
Long	6.11" (155.19 mm)

204-99 (Tank Mate)

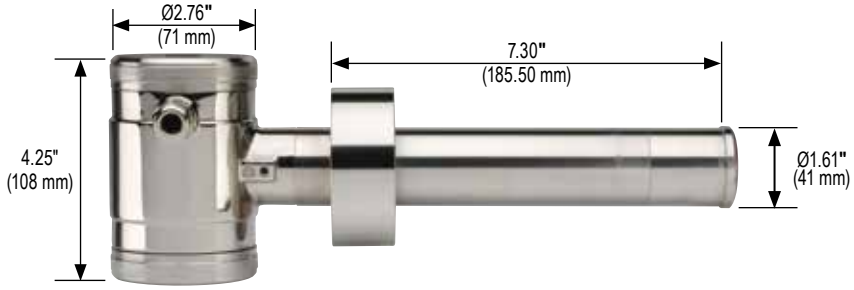

Intelligent Pressure & Level Transmitter



25 SERIES

- Ranges from -160 inH_2O vac to 1,160 psig
- Hart® protocol output available
- 316 Stainless Steel wetted parts
- Strong flush diaphragm with minimal fill volume
- Can be cleaned-in-place (CIP) or steamed-in-place (SIP)
- Meets the requirements of 3-A

HART COMMUNICATION PROTOCOL

APPLICATIONS

- Food & dairy
- Chemical processing
- Pharmaceutical

FEATURES & BENEFITS

- All Stainless Steel housing
- Easy programming and range adjustment without test pressure via on-board display
- Accuracy 0.2% of adjusted span
- 4:1 turn down
- Active temperature compensation
- Hart® protocol optional

SPECIFICATIONS

Output signals	4 mA to 20 mA 2-wire, 4 mA to 20 mA 2-wire and Hart® signal
Pressure ranges	-160 inH20 vac to 1,160 psig
Accuracy	0.2% of adjusted span
Stability	<0.1%/year
Adjustment	By 3 push buttons on display or optional Hart® signal
Response time	<100 ms
Service life	>10 years
Temperature ranges	-4 °F to 212 °F (-20 °C to 100 °C); 293 °F (145 °C) for 45 min.
Power requirement*	12 Vdc to 36 Vdc
Measuring element	316 Stainless Steel (Hastelloy C or Tantalum optional)
Connection	316 Stainless Steel
Housing material	304 Stainless Steel (316 Stainless Steel optional)
Environmental rating	IP66 (IP68 optional)
Electrical protection	IP66 (NEMA 4X), IP68 (NEMA 6) optional
Weight	Approximately 2.20 lb. (Depending on process connection)

* Unregulated

⚠ **WARNING:** This product can expose you to chemicals including Lead and Nickel, which are known to the State of California to cause cancer and birth defects or other reproductive harm. For more information go to www.P65Warnings.ca.gov

ORDERING INFORMATION				
SERIES	**254**			
TRI-CLAMP SIZE	**12**	1-1/2"	**24**	3"
	16	2"		
PRESSURE RANGES (Adjustable)	**40inH$_2$O-vac**	-40 inH$_2$0 to 0 inH$_2$O*	**16/40 inH$_2$O**	0 inH$_2$O to 16 inH$_2$O to 0 inH$_2$O to 40 inH$_2$O (.6 psig to 1.45 psig)
	160inH$_2$O-vac	-160inH$_2$O to 0 inH$_2$O	**40/160 inH$_2$O**	0 inH$_2$O to 40 inH$_2$O to 0 inH$_2$O to 160 inH$_2$O (1.45 psig to 5.8 psig)
	14.7/43-vac	-14.7 psig to 43 psig	**160/637 inH$_2$O**	0 inH$_2$O to 160 inH$_2$O to 0 inH$_2$O to 637 inH$_2$O (5.8 psig to 23 psig)
	14.7/130-vac	-14.7 psig to 130 psig	**14.5/58**	14.5 psig to 58 psig (0 inH$_2$O to 400 inH$_2$O to 0 inH$_2$O to 1,607 inH$_2$O)
	14.7/335-vac	-14.7 to 335 psig	**29/145**	29 psig to 145 psig (0 inH$_2$O to 803 inH$_2$O to 0 inH$_2$O to 4,017 inH$_2$O)
	14.7/1145-vac	-14.7 psig to 1,145 psig	**87/350**	87 psig to 350 psig (0 inH$_2$O to 2,410 inH$_2$O to 0 inH$_2$O to 9,697 inH$_2$O)
			290/1160	290 psig to 1,160 psig (0 inH$_2$O to 8,035 inH$_2$O to 0 inH$_2$O to 32,140 inH$_2$O)
ACCURACIES	**1**	0.2% of adjusted span		
OUTPUT SIGNALS	**1**	4 mA to 20 mA, 2-wire	**43**	4 mA to 20 mA, 2-wire and Hart® signal
ELECTRICAL CONNECTIONS	**25**	M12 x 1 (4-pin)	**71**	PG9 Cable Gland
	28	1/2" NPT Female		
OPTIONS	**TC**	Transparent Cover (for display)		

Please consult your local NOSHOK Distributor or NOSHOK, Inc. for availability and delivery information.

* Not available in 1-1/2" Tri-Clamp

EXAMPLE

254 – 12 – 16/40 inH2O – 1 – 43 – 25 – TC

Series ..... 254 Series
Tri Clamp size ..... 1-1/2"
Pressure range ..... 0 inH$_2$O to 16 inH$_2$O to 0 inH$_2$O to 40 inH$_2$O
Accuracy ..... 0.2% of span
Output signal ..... 4 mA to 20 mA, 2-wire and Hart® signal
Electrical connection ..... M12 x 1 (4-pin)
Option ..... Transparent Cover





*1-1/2", 2" and 3" Tri-Clamp connections available

M12 x 1 (4-PIN) WIRING

1	Brown	V+
2	White	V-
3	Blue	Not used
4	Black	Not used

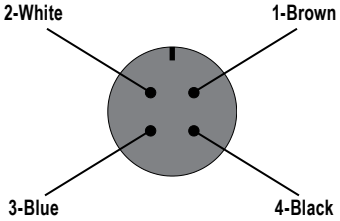

"SNORKEL" Pressure & Level Transmitter



304 Series shown with transparent cover

30 SERIES

- 300 Series: ranges from 40 inH_2O to 60 psig
  301 Series: adjustable ranges from 16 inH_2O to 1,450 psig via Hart®
  302 Series: adjustable ranges from 40 inH_2O to 1,160 psig
  304 Series: adjustable ranges from 16 inH_2O to 1,450 psig
- Hart® signal output available on 301 & 304 Series Transmitters
- 316 Stainless Steel wetted parts
- Strong flush diaphragm with minimal fill volume
- Can be cleaned-in-place (CIP) or steamed-in-place (SIP)
- Meets the requirements of 3-A

HART COMMUNICATION PROTOCOL

APPLICATIONS

- Tank level measurement
- Food & beverage
- Dairy
- Breweries
- Chemical processing
- Pharmaceutical

FEATURES & BENEFITS

300/301 Series

- Cable connection only (no housing)
- Active temperature compensation
- Fixed range (300 Series)
- Range adjustment with Hart® (301 Series)
- 10:1 Turn down (301 Series)

302 Series

- All polished Stainless Steel housing
- Active temperature compensation
- Zero/span adjustable
- 4:1 Turn down

304 Series

- All polished Stainless Steel housing
- Active temperature compensation
- Accuracy 0.1% of adjusted span
- 10:1 Turn down
- Easy programming and range adjustment without test pressure via on-board display
- Hart® protocol available

	SERIES	SPECIFICATIONS
Output signals	All	4 mA to 20 mA 2-wire, 4 mA to 20 mA 2-wire and Hart® signal (301 & 304 Series only)
Pressure ranges	300 Series	Ranges from 40 inH_2O to 60 psig
	302 Series	Adjustable ranges from 40 inH_2O to 1,160 psig
	301/304 Series	Adjustable ranges from 16 inH_2O to 1,450 psig
Accuracy	300//302 Series	0.2% of adjusted span
	301/304 Series	0.1% of adjusted span
Stability	All	<0.1%/year
Adjustment	301 Series	Hart® signal
	302 Series	Zero and span internally
	304 Series	By 3 push buttons on display or optional Hart® signal
Response time	All	<150 ms
Service life	All	>10 years
Temperature ranges	300/301 Series	14 °F to 158 °F (-10 °C to 70 °C)
	302/304 Series	-4 °F to 212 °F (-20 °C to 100 °C) ; 293 °F (145 °C) for 45 min.
Power requirement*	All	12 Vdc to 36 Vdc
Measuring element	All	316L Stainless Steel (Hastelloy C, Tantalum or Gold plated optional)
Connection	All	316 Stainless Steel
Housing material	All	304 Stainless Steel (316 Stainless Steel optional)
Environmental rating	300/301 Series	IP68
	302/304 Series	IP66 (IP68 optional)
Electrical protection	All	IP66 (NEMA 4X), IP68 (NEMA 6) optional
Weight		Weight is dependent on model and cable length

* Unregulated

⚠ **WARNING:** This product can expose you to chemicals including Lead and Nickel, which are known to the State of California to cause cancer and birth defects or other reproductive harm. For more information go to www.P65Warnings.ca.gov

ORDERING INFORMATION

SERIES	**300**	Fixed range transmitter	**302**	Adjustable transmitter		
	301	Adjustable transmitter with Hart® signal	**304**	Intelligent transmitter		
TRI-CLAMP SIZE	**12**	1-1/2"	**24**	3"		
	16	2"				
300 SERIES PRESSURE RANGES (Fixed)	**40 inH_2O**	0 inH_2O to 40 inH_2O	**120 inH_2O**	0 inH_2O to 120 InH2O	**15**	0 psig to 15 psig
	60 inH_2O	0 inH_2O to 60 inH_2O	**5**	0 psig to 5 psig	**30**	0 psig to 30 psig
	80 inH_2O	0 inH_2O to 80 inH_2O	**10**	0 psig to 10 psig	**60**	0 psig to 60 psig
301 SERIES PRESSURE RANGES (Adjustable with Hart®)	**16/160 inH_2O**	0 inH_2O to 16 inH_2O to 0 inH_2O to 160 inH_2O	**14.5/145**	0 psig to 14.5 to 0 psig to 145 psig	**290/1450**	0 psig to 290 psig to 0 psig to 1,450 psig
	47/470 inH_2O	0 inH_2O to 47 inH_2O to 0 inH_2O to 470 inH_2O	**72.5/435**	0 psig to 72.5 psig to 0 psig to 435 psig		
302 SERIES PRESSURE RANGES (Adjustable)	**40/160 inH_2O**	0 inH_2O to 40 inH_2O to 0 inH_2O to 160 inH_2O	**14.5/58**	0 psig to 14.5 to 0 to 58 psig	**232/725**	0 psig to 232 psig to 0 psig to 725 psig
	160/277 inH_2O	0 inH_2O to 160 inH_2O to 0 inH_2O to 277 inH_2O	**36/145**	0 psig to 36 psig to 0 psig to 145 psig	**580/1160**	0 psig to 580 psig to 0 psig to 1,160 psig
	277/609 inH_2O	0 inH_2O to 277 to 0 inH_2O to 609 inH_2O	**100/232**	0 psig to 100 psig to 0 psig to 232 psig		
304 SERIES PRESSURE RANGES (Intelligent)	**16/160 inH_2O**	0 inH_2O to 16 inH_2O to 0 inH_2O to 160 inH_2O	**14.5/145**	0 psig to 14.5 to 0 psig to 145 psig	**290/1450**	0 psig to 290 psig to 0 psig to 1,450 psig
	47/470 inH_2O	0 inH_2O to 47 inH_2O to 0 inH_2O to 470 inH_2O	**72.5/435**	0 psig to 72.5 psig to 0 psig to 435 psig		
ACCURACIES	**1**	0.2% of adjusted span*				
OUTPUT SIGNALS	**1**	4 mA to 20 mA, 2-wire	**43**	4 mA to 20 mA, 2-wire and Hart® signal**		
ELECTRICAL CONNECTIONS †	**25**	M12 x 1 (4-pin)	**71**	PG9 Cable Gland		
	28	1/2" NPT Female				
CABLE LENGTHS ††	**15P**	15' Polyurethane cable	**30P**	30' Polyurethane cable		
OPTIONS	**JB**	Cable Junction Box	**TC**	Transparent Cover (for display)***		

Please consult your local NOSHOK Distributor or NOSHOK, Inc. for availability and delivery information.

* Standard accuracy on the 304 Series is ±0.1% of adjusted span
** Required for the 301 Series, optional for the 304 Series
*** Available for the 304 Series only
† Available for the 302 and 304 Series only
†† Additional cable lengths available, consult factory

EXAMPLE **301 – 12 – 14.5/145 – 1 – 43 – 15P**

Series ..... 301 Series
Tri-Clamp size ..... 1-1/2"
Pressure range ..... 0 psig to 14.5 to 0 psig to 145 psig
Accuracy ..... 0.2% of adjusted span
Output signal ..... 4 mA to 20 mA, 2-wire and Hart® signal
Cable length ..... 15' Polyurethane cable

EXAMPLE **304 – 16 – 72.5/435 – 1 – 43 – 28 – 15P – TC**

Series ..... 304 Series
Tri-Clamp size ..... 2"
Pressure range ..... 0 psig to 72.5 psig to 0 psig to 435 psig
Accuracy ..... 0.1% of adjusted span
Output signal ..... 4 mA to 20 mA, 2-wire and Hart®
Electrical connection ..... 1/2" NPT Female
Cable length ..... 15' Polyurethane cable
Option ..... Transparent Cover

M12 x 1 (4-PIN) WIRING

1	Brown	V+
2	White	V-
3	Blue	Not used
4	Black	Not used

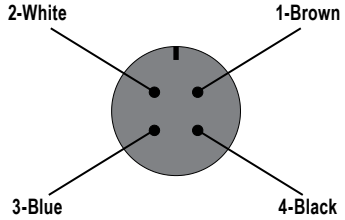

Dimensions

300/301 Series



* 300 Series fixed range is 6.22" (158 mm)

302 Series





*1-1/2", 2" and 3" Tri-Clamp connections available

304 Series





*1-1/2", 2" and 3" Tri-Clamp connections available

Vibrating Level Switch



LSE20 SERIES

- When covered by media, the frequency of the fork decreases and provides a switching function
- Can be used for low or high level detection
- Pressure, temperature, foam will not influence the accuracy
- Can be cleaned-in-place (CIP) or steamed-in-place (SIP)

APPLICATIONS

- Suitable for all type of liquids
- Provides protection from run dry conditions for pumps, tanks, and pipelines.
- Threaded versions for common industrial applications
- Tri-Clamp versions specialized for food, pharmaceutical and beverage industries

SPECIFICATIONS	
Insertion length for industrial*	3"
Insertion length for sanitary*	2-3/8"
Switching output	PNP/3-wire (Transistor PNP)
Accuracy parameters	
Switchpoint accuracy	+/-0.08 inches (+/- 2 mm)
Switch hysteresis	≤ 0.12 in (3 mm)
Repeatability	0.004 inches (0.1 mm)
Response time	Covered by media - 0.5 seconds Uncovered by media - 1.0 seconds
Density of media	0.018 to 0.09 lbs/in³ (0.5 to 2.5 g/cm³)
Viscosity	0.1 to 10,000 mPa s (0.1 to 10,000 cP)
Temperature ranges	Media: Sanitary -40 °F to 302 °F (-40 °C to 150 °C) Standard -40 °F to 212 °F (-40 °C to 100 °C) High Temp -40 °F to 302 °F (-40 °C to 150 °C)
	Ambient: -40 °F to 140 °F (-40 °C to 60 °C)
	Storage: -40 °F to 140 °F (-40 °C to 60 °C)
LED status	Green: Open Red: Closed Flashing Red: Error
Power requirement**	10Vdc to 30Vdc
Power consumption	< 1 W
Operating pressure	-15 psi to 930 psi
Housing material	316L Stainless Steel
Wetted parts	316L Stainless Steel, Optional: Hastelloy C-276
Sanitary wetted parts	Ra < 30 uin (0.76 um) ASME BPE SF3
Environmental rating	M12x1 (4-pin) - IP66/68, DIN Form A - IP65 per IEC 60529
Electromagnetic rating	RFI, EMI and ESD protection
Electrical protection	Protected against reverse polarity, over-voltage and short circuit
Weight	Approximately 7 oz.

*Other lengths available, consult factory
** See user manual for detailed specifications

WARNING: This product can expose you to chemicals including Nickel, which is known to the State of California to cause cancer. For more information go to www.P65Warnings.ca.gov

ORDERING INFORMATION				
SERIES	**LSE20**	Vibrating level switch		
SWITCH OUTPUT	**1**	PNP/3-wire (Transistor PNP)		
PROCESS CONNECTIONS*	**8**	1/2" NPT male	**101**	1-1/2" Tri-Clamp
	18	3/4" NPT male	**102**	2" Tri-Clamp
ELECTRICAL CONNECTIONS	**8**	DIN EN 175301-803 Form A	**25**	M12 x 1 (4-pin)

Please consult your local NOSHOK Distributor or NOSHOK, Inc. for availability and delivery information

*Other Connections Available, Consult Factory

EXAMPLE

LSE20 – 1 – 8 – 25

Series ..... LSE20 Series
Switch output ..... PNP/3-wire (Transistor PNP)
Process connection ..... 1/2" NPT male
Electrical connection ..... M12 x 1 (4-pin)

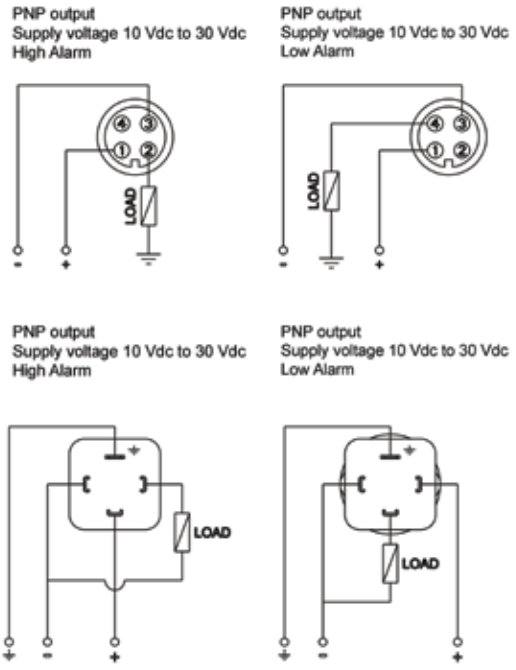

Dimensions

LSE20-25 (M12 x 1 (4-pin))

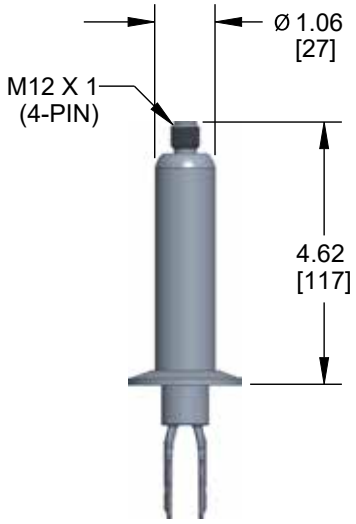

LSE20-8 (DIN EN 175301-803 Form A)

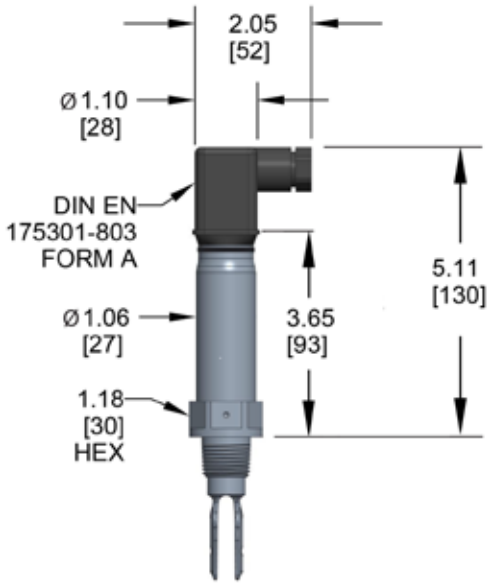

LSE20 Process Connections

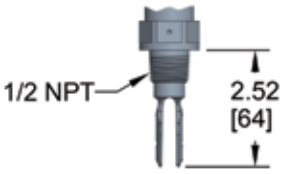

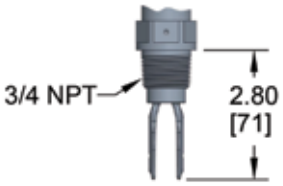

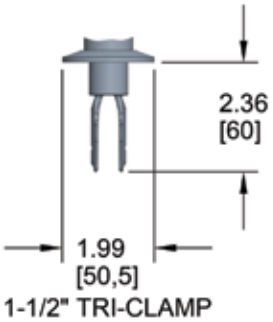

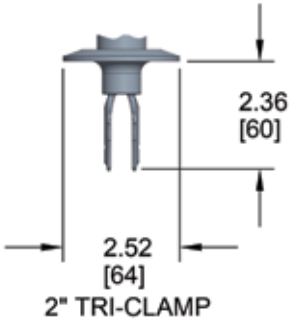

Mechanical Compact SPDT



200 SERIES

- Switch adjustment ranges from 3 psig to 30 psig through 435 psig to 4,640 psig depending on model
- Standard Zinc-nickel with NBR diaphragm wetted parts;
  Membrane type - NBR diaphragm
  Piston type - PTFE dynamic seal with NBR static o-ring
- SPST or SPDT snap-action switch with solid Silver contacts

APPLICATIONS

- Hydraulics & pneumatics
- Pumps & compressors
- Tank monitoring
- Leak detection
- Water management

SPECIFICATIONS	
Switching parameters	
Function	SPST or SPDT
Contact rating*	5A @ 125/250 Vac 5A @ 12/24 Vdc
Repeatability	Max. ±2% of Full Scale at room temperature
Hysteresis	2 psi + 5 - 10% of set point
Contact material	Solid Silver, self-cleaning, optional gold-plated
Frequency	Max. 100 cycles/min
Switch type	Snap action
Pressure ranges	3 psig to 30 psig through 435 psig to 4,640 psig
Service life	200L: >9,000,000 load cycles 200M: >2,000,000 load cycles 200H: >1,000,000 load cycles
Temperature ranges	Media -4 °F to 176 °F (-20 °C to 80 °C) Ambient -4 °F to 176 °F (-20 °C to 80 °C) Storage -4 °F to 176 °F (-20 °C to 80 °C)
Proof pressure	870 psig to 5,800 psig depending on model See Ordering Information for details
Measuring element	Membrane type - NBR diaphragm Piston type - PTFE dynamic seal with NBR static o-ring
Housing material	Zinc-nickel plated Steel, optional Stainless Steel
Environmental rating	IP00 - Spade Terminals IP65 - DIN EN 175301-803 Form A, M12, Cable & Deutsch Integral, Field adjustable IP67 - M12, Cable & Deutsch Integral, Fixed set point
Weight	Approximately 0.2 lb.

* Gold contacts may be required for less than 5 VDC and 5 milliamps

⚠ **WARNING:** This product can expose you to chemicals including Lead and Nickel, which are known to the State of California to cause cancer and birth defects or other reproductive harm. For more information go to www.P65Warnings.ca.gov

ORDERING INFORMATION

SERIES	**200L**	200 Low Pressure Membrane Series	**200M**	200 High Pressure Membrane Series
	200H	200 High Pressure Piston Series		
SWITCH FUNCTIONS	**1**	SPST, Normally open	**3**	SPDT
	2	SPST, Normally closed		
PROCESS CONNECTIONS	**1**	1/8" NPT male	**45**	7/16-20 SAE Male, Non-Adjustable
	2	1/4" NPT male	**62**	G 1/4 Male ISO 228-1
	33	G 1/8 Male ISO 228-1		
200L LOW PRESSURE MEMBRANE SWITCH ADJUSTMENT RANGES (Max. working pressure)	**3/30**	3 psig to 30 psig (870 psig)	**15/145**	15 psig to 145 psig (870 psig)
	7/75	7 psig to 75 psig (870 psig)	**15/235**	15 psig to 235 psig (870 psig)
	7/116	7 psig to 116 psig (870 psig)	**45/300**	45 psig to 300 psig (870 psig)
200M HIGH PRESSURE MEMBRANE SWITCH ADJUSTMENT RANGES (Max. working pressure)	**15/50**	15 psig to 50 psig (3,000 psig)		
	15/150	15 psig to 150 psig (3,000 psig)		
	45/300	45 psig to 300 psig (3,000 psig)		
200H HIGH PRESSURE PISTON SWITCH ADJUSTMENT RANGES (Max. working pressure)	**145/435**	145 psig to 435 psig (5,800 psig)	**290/2900**	290 psig to 2,900 psig (5,800 psig)
	145/1160	145 psig to 1,160 psig (5,800 psig)	**290/3625**	290 psig to 3,625 psig (5,800 psig)
	145/1740	145 psig to 1,740 psig (5,800 psig)	**435/4640**	435 psig to 4,640 psig (5,800 psig)
ELECTRICAL CONNECTIONS†	**4**	Spade Terminals (1/4 x 1/32)	**100**	Deutsch 2-Pin Male (DT04-2P)*, **
	8	DIN EN 175301-803 Form A	**101**	Deutsch 3-Pin Male (DT04-3P)*
	25	M12 x 1 4-pin	**103**	Deutsch 2-Pin Female Socket (DT06-2S)*, **
	36	18" Integral Cable	**104**	Deutsch 3-Pin Female Socket (DT06-3S)*
	46	Deutsch Integral 3-Pin (DT04-3P)	**110**	Weatherpack Tower, 3-Pin Female*
	66	Deutsch Integral 2-Pin (DT04-2P) **	**111**	Weatherpack Tower, 3-Pin Male*
	96	Weatherpack Tower, 2-Pin Female*,**	**112**	Weatherpack Shroud, 3-Pin Female*
	97	Weatherpack Tower, 2-Pin Male*,**	**113**	Weatherpack Shroud, 3-Pin Male*
	98	Weatherpack Shroud, 2-Pin Female*,**		
	99	Weatherpack Shroud, 2-Pin Male*,**		
OPTIONS* **	**AU**	Gold Plated Contacts	**SP**	Factory Adjusted Switch Point
	EP	EPDM Diaphragm (-40/212 °F)	**SS**	Stainless Steel Wetted Materials
	HNBR	Low Temp Nitrile Diaphragm (-22/176 °F)	**VT**	FKM Diaphragm (32/212 °F)
	FVMQ	Fluorosilicone Diaphragm (-40/212 °F)		

Please consult your local NOSHOK Distributor or NOSHOK, Inc. for availability and delivery information.

* Options attached to Integral Cable
** For SPST only
*** Not all options are available for all ranges, consult factory
† Other electrical connections available, consult factory

EXAMPLE

200L – 3 – 2 – 3/30 – 8

Series ..... 200 Low Pressure Membrane Switch
Switch function ..... SPDT
Process connection ..... 1/4" NPT Male
Adjustable range ..... 3 psig to 30 psig (870 psig)
Electrical connection ..... DIN EN 175301-803 Form A

Dimensions

Integral Cable



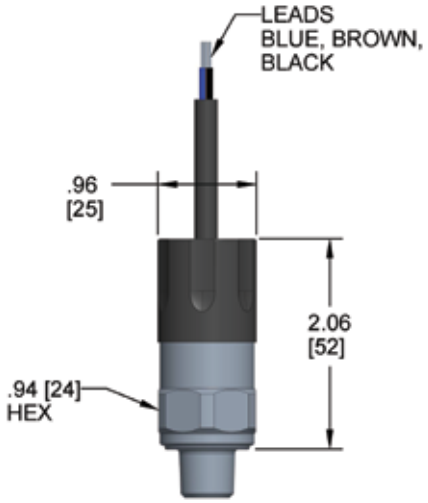

M12 x 1 (4-Pin)



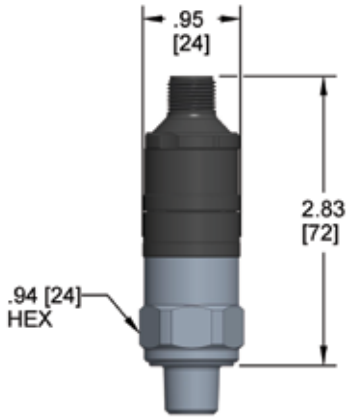

Spade Terminals (SPST, Normally Closed)



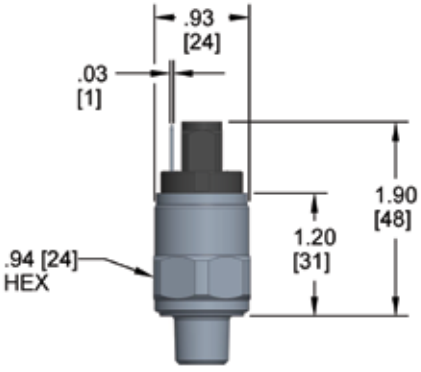

Spade Terminals (SPST, Normally Open)



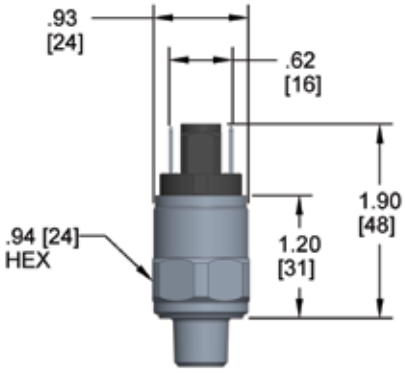

Spade Terminals (3-Pin)

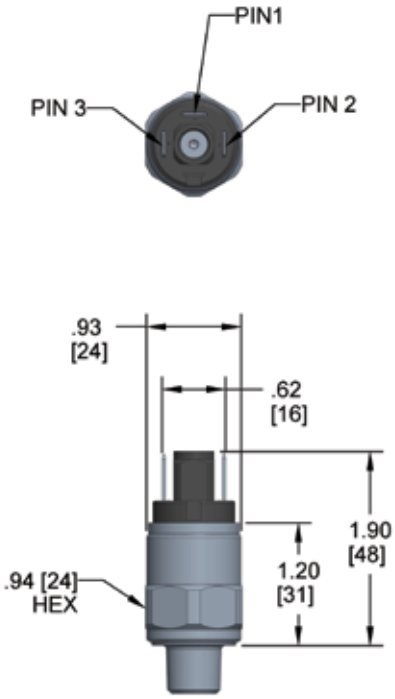

DIN EN 175301-803 Form A (With Socket)

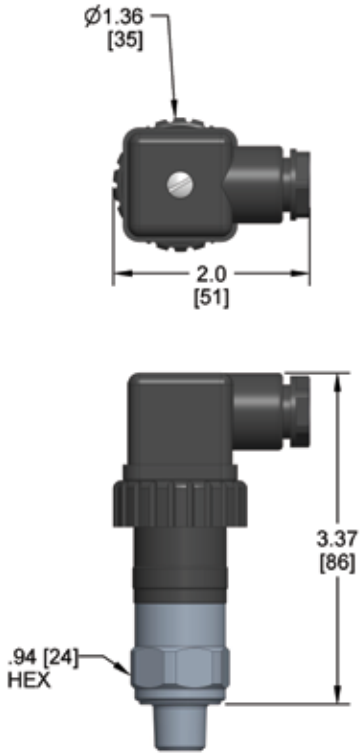

DIN EN 175301-803 Form A (No Socket)

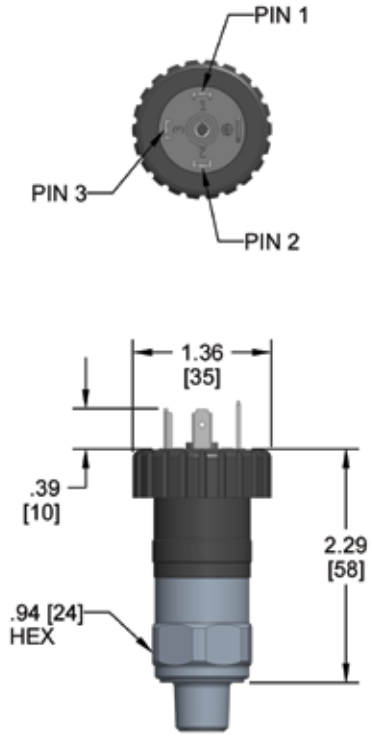

DIN EN 175301-803 Form A

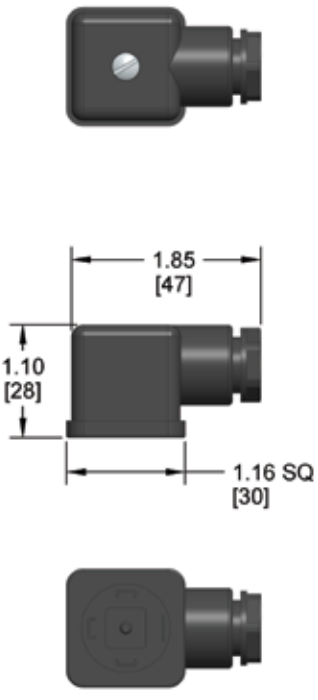

Dimensions

Deutsch Integral (3-Pin - DT04-3P)

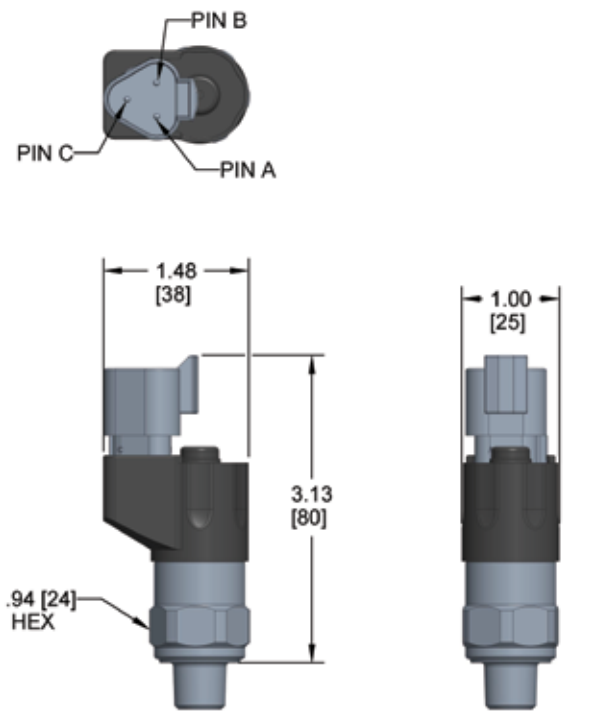

Deutsch Integral (2-Pin - DT04-2P)

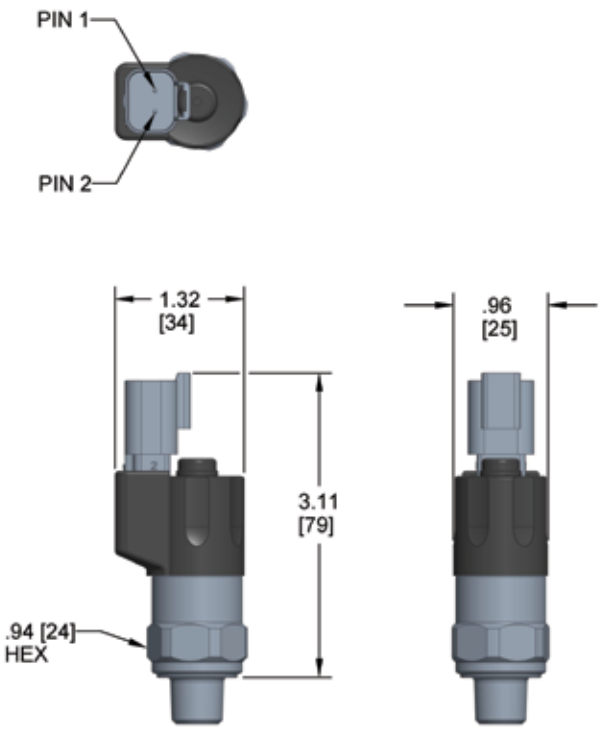

Mechanical Compact SPDT with Adjustable Hysteresis



300 SERIES

- Switch adjustment ranges from vacuum through 4,600 psig depending on model
- Standard Zinc-nickel with NBR diaphragm wetted parts
- SPST or SPDT snap-action switch with solid Silver contacts
- CE compliant to suppress RFI, EMI and ESD
- RoHS compliant

APPLICATIONS

- Hydraulics & pneumatics
- Pumps & compressors
- Tank monitoring
- Leak detection
- Water management

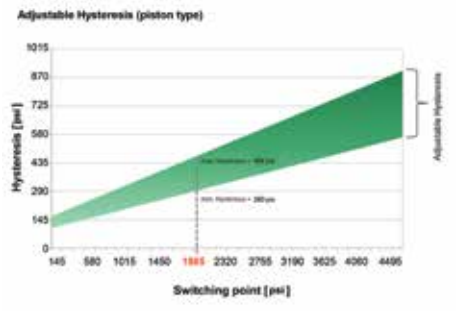

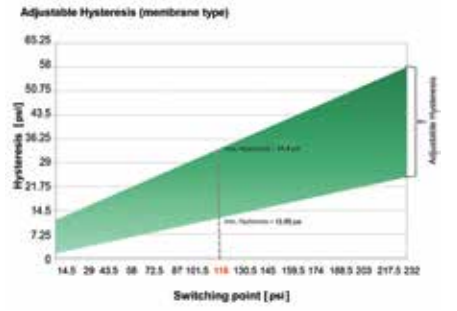

SPECIFICATIONS

Switching parameters	
Function	SPST or SPDT
Contact rating	6A @ 125/250 Vac 6A @ 12/24 Vdc
Repeatability	2% of full set point range at 70 °F
Hysteresis	Adjustable, see charts below
Contact material	Solid Silver, self-cleaning
Frequency	Max. 100 cycles/min
Switch type	Snap action with adjustable hysteresis
Pressure ranges	-5 inHg to -28 inHg (350 psig) through 450 psig to 4,600 psig (5,000 psig)
Service life	>1,000,000 load cycles
Temperature ranges	Media -4 °F to 176 °F (-20 °C to 80 °C) Ambient -4 °F to 176 °F (-20 °C to 80 °C) Storage -4 °F to 176 °F (-20 °C to 80 °C)
Proof pressure	870 psig or 5,000 psig depending on adjustment range
Measuring element	NBR
Housing material	Zinc-nickel plated Steel
Environmental rating	IP65 - DIN EN 175301-803 Form A IP67 - All others
Weight	Approximately 0.2 lb.

WARNING: This product can expose you to chemicals including Lead and Nickel, which are known to the State of California to cause cancer and birth defects or other reproductive harm. For more information go to www.P65Warnings.ca.gov

ORDERING INFORMATION				
SERIES	**300V**	300 Vacuum Series	**300H**	300 High Pressure Series
	300L	300 Low Pressure Series		
SWITCH FUNCTIONS	**1**	SPST, Normally open	**3**	SPDT
	2	SPST, Normally closed		
PROCESS CONNECTIONS	**1**	1/8" NPT male	**33**	G 1/8B
	2	1/4" NPT male	**45**	7/16-20 SAE Male, Non-Adjustable
	10	G 1/4B		
300V VACUUM PRESSURE SWITCH ADJUSTMENT RANGES (Max. working pressure)	**5/28-vac**	-5 inHg to -28 inHg (350 psig)		
300L LOW PRESSURE SWITCH ADJUSTMENT RANGES (Max. working pressure)	**3/7**	3 psig to 7 psig (870 psig)	**7/120**	7 psig to 120 psig (870 psig)
	3/15	3 psig to 15 psig (870 psig)	**15/200**	15 psig to 200 psig (870 psig)
	3/30	3 psig to 30 psig (870 psig)	**15/230**	15 psig to 230 psig (870 psig)
	7/70	7 psig to 70 psig (870 psig)	**30/290**	30 psig to 290 psig (870 psig)
300H HIGH PRESSURE SWITCH ADJUSTMENT RANGES (Max. working pressure)	**100/220**	100 psig to 220 psig (5,000 psig)	**300/2900**	300 psig to 2,900 psig (5,000 psig)
	145/435	145 psig to 435 psig (5,000 psig)	**300/3600**	300 psig to 3,600 psig (5,000 psig)
	145/1160	145 psig to 1,160 psig (5,000 psig)	**450/4600**	450 psig to 4,600 psig (5,000 psig)
	145/1750	145 psig to 1,750 psig (5,000 psig)		
ELECTRICAL CONNECTIONS†	**1**	36" Cable attached to option 8	**100**	Deutsch 2-Pin Male (DT04-2P)*, **
	8	DIN EN 175301-803 Form A	**101**	Deutsch 3-Pin Male (DT04-3P)*
	25	M12 x 1 4-Pin	**103**	Deutsch 2-Pin Female Socket (DT06-2S)*, **
	36	3' Integral Cable	**104**	Deutsch 3-Pin Female Socket (DT06-3S)*
	66	Deutsch Integral 2-Pin (DT04-2P)**	**110**	Weatherpack Tower, 3-Pin Female*
	96	Weatherpack Tower, 2-Pin Female*, **	**111**	Weatherpack Tower, 3-Pin Male*
	97	Weatherpack Tower, 2-Pin Male*, **	**112**	Weatherpack Shroud, 3-Pin Female*
	98	Weatherpack Shroud, 2-Pin Female*, **	**113**	Weatherpack Shroud, 3-Pin Male*
	99	Weatherpack Shroud, 2-Pin Male*, **		
OPTIONS* **	**EP**	EPDM Diaphragm (-40/212 °F)	**SS**	Stainless Steel Wetted Materials
	HNBR	Low Temp Nitrile Diaphragm (-40/176 °F)	**VT**	FKM Diaphragm (0/250 °F)
	SP	Factory Adjusted Switch Point		

Please consult your local NOSHOK Distributor or NOSHOK, Inc. for availability and delivery information.

* Options attached to 18" cable
** For SPST only
*** Not all options are available for all ranges, consult factory
† **Other electrical connections available, consult the factory**

EXAMPLE

300V – 1 – 2 – 5/28-vac – 25 – EP

Series .....300 Vacuum Series
Switch function.....SPST, Normally open
Process connection .....1/4" NPT Male
Adjustable range.....-5 inHg to -28 inHg (350 psig)
Electrical connection .....M12 x 1 4-Pin
Option..... EPDM Diaphragm (-10/250 °F)

Dimensions

DIN EN 175301-803 Form A

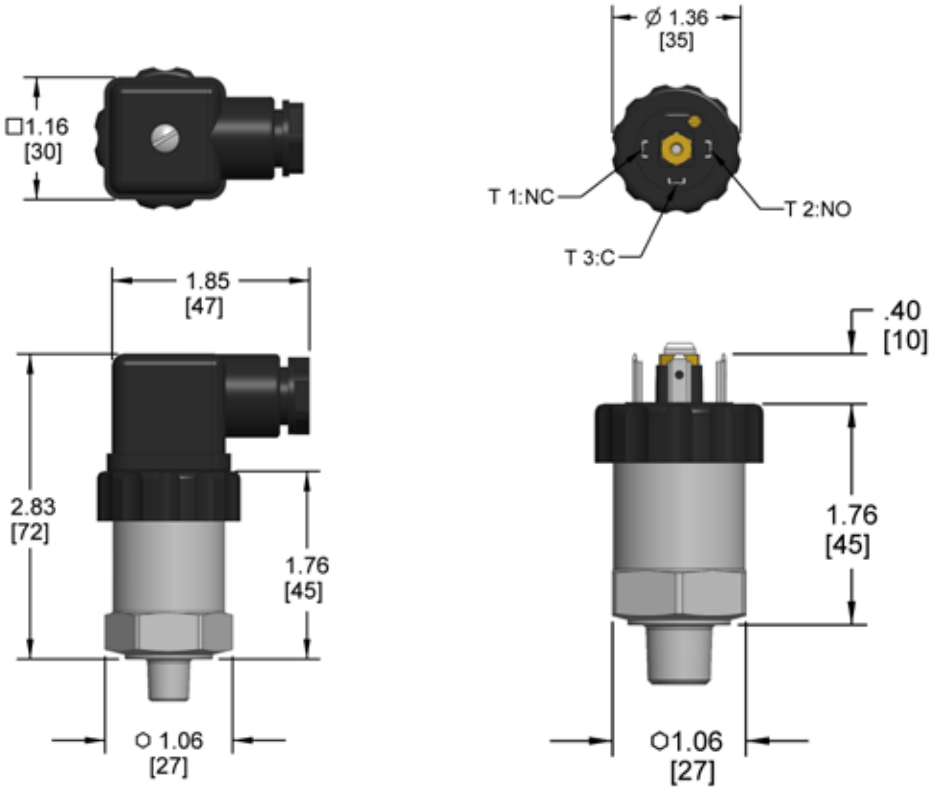

M12 x 1 4-Pin

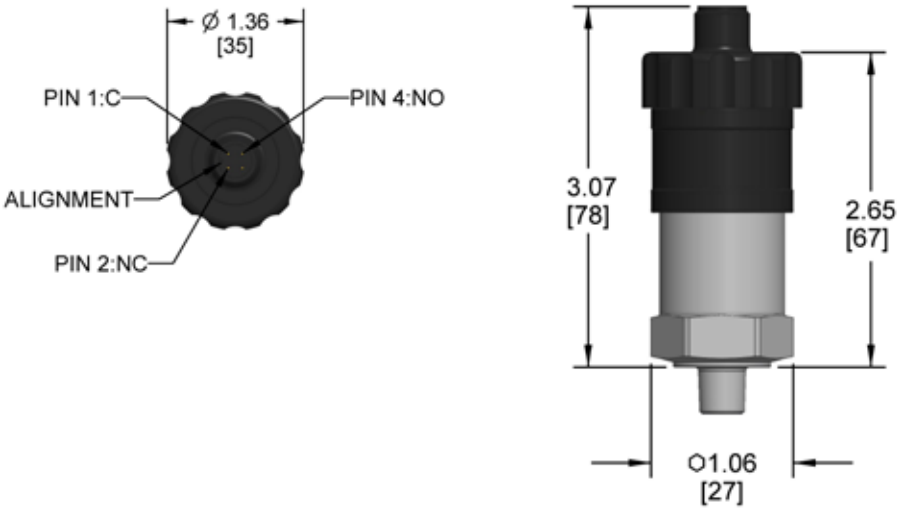

300H 3' Integral Cable

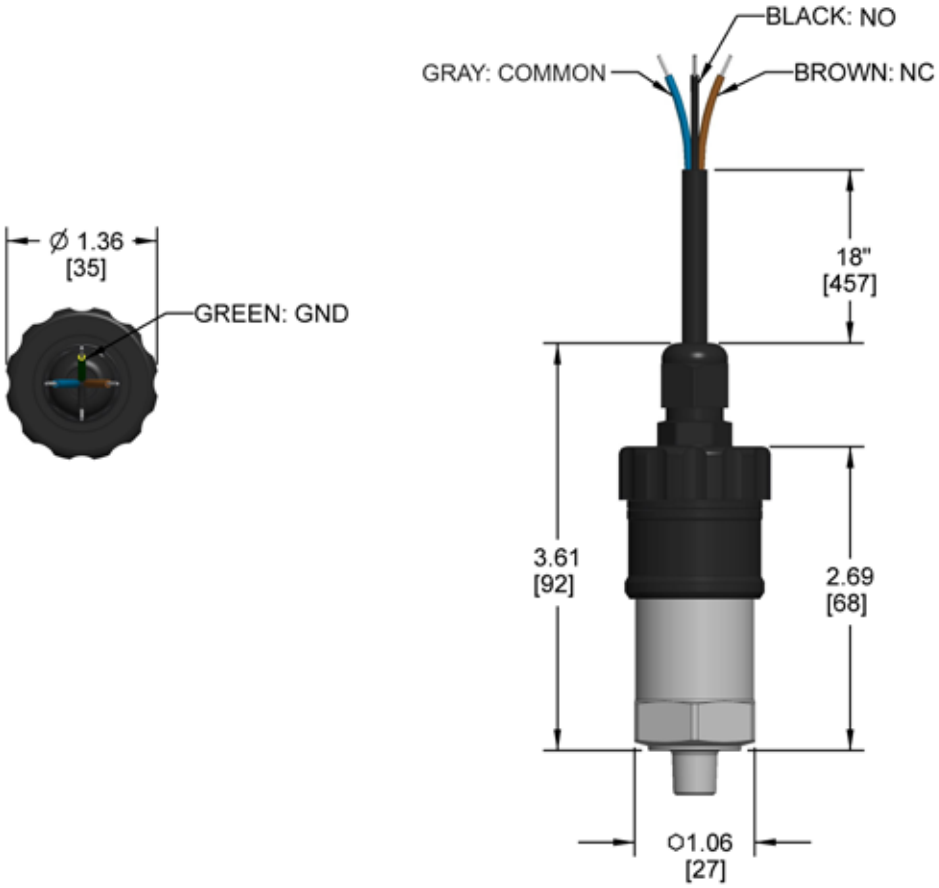

300H Deutsch Integral 2-Pin (DT04-2P)

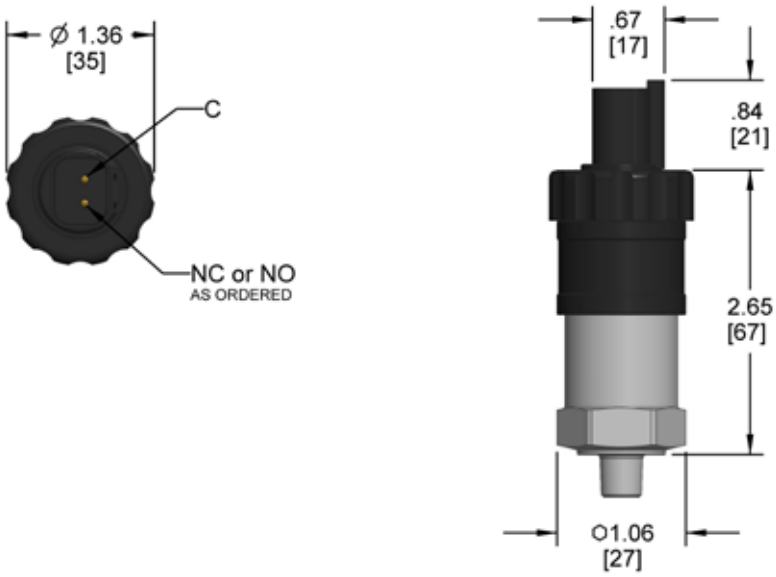

Mechanical Heavy-Duty SPDT



400 SERIES

- Switch adjustment ranges from vacuum through 4,600 psig depending on model
- Standard zinc-plated Steel with NBR diaphragm (< 225 psig); Steel piston with NBR seal (> 225 psig) wetted parts
- SPDT snap-action switch
- CE compliant to suppress RFI, EMI and ESD
- RoHS compliant

APPLICATIONS

- Hydraulics & pneumatics
- Mobile hydraulics
- Power generation
- Pumps & compressors
- Tank monitoring
- Water management

SPECIFICATIONS	
Switching parameters	
Function	SPDT snap-action micro switch
Contact rating	6A @ 125/250 Vac
	6A @ 12/24 Vdc
Repeatability	±2% of full scale of adjustment range
Hysteresis	Diaphragm type, 1% to 11% of adjustment range full scale Piston type, 2% to 8% of adjustment range full scale
Contact material	Solid Silver, self-cleaning
Frequency	Max. 200 cycles/min.
Pressure ranges	0 psig to 300 psig through 0 psig to 5,000 psig Adjustment knob from 3 psig to 4,600 psig dependent on full scale range
Service life	>1,000,000 load cycles
Temperature ranges	Media -4 °F to 176 °F (-20 °C to 80 °C) Ambient -4 °F to 176 °F (-20 °C to 80 °C) Storage -13 °F to 185 °F (-25 °C to 85 °C)
Proof pressure	300 psi or 5,000 psi depending on adjustment range
Measuring element	NBR diaphragm ≤ 230 psig Stainless Steel piston with NBR seal ≥ 500 psig 1/4″ NPT and 7/16-20 SAE zinc-plated Steel connections standard, others available on request
Housing material	Zinc die-cast
Environmental rating	IP65 for DIN EN 175301-803 Form A IP67 for M12 x 1
Electromagnetic rating	CE compliant to EU Standard 73/23/EWG RFI, EMI and ESD protection
Shock	30 g's according to IEC 60068-2-27
Vibration	10 g's according to IEC 60068-2-6
Weight	Approximately 0.66 lb.

⚠ **WARNING:** This product can expose you to chemicals including Lead and Nickel, which are known to the State of California to cause cancer and birth defects or other reproductive harm. For more information go to www.P65Warnings.ca.gov

ORDERING INFORMATION				
SERIES	**400V**	400 Vacuum Series	**400H**	400 High Pressure Series
	400L	400 Low Pressure Series		
SWITCH FUNCTION	**3**	Single Pole Double Throw (SPDT)		
PROCESS CONNECTIONS	**2**	1/4" NPT male	**19**	G 1/4 B female
	10	G 1/4 B male	**45**	7/16-20 SAE Male, Non-Adjustable
400V VACUUM PRESSURE SWITCH ADJUSTMENT RANGES (Max. working pressure)	**5/28-vac**	-5 inHg to -28 inHg (350 psig)		
400L LOW PRESSURE SWITCH ADJUSTMENT RANGES (Max. working pressure)	**3/30**	3 psig to 30 psig (870 psig)	**15/230**	15 psig to 230 psig (870 psig)
	7/120	7 psig to 120 psig (870 psig)		
400H HIGH PRESSURE SWITCH ADJUSTMENT RANGES (Max. working pressure)	**145/435**	145 psig to 435 psig (5,000 psig)	**300/2900**	300 psig to 2,900 psig (5,000 psig)
	145/1160	145 psig to 1,160 psig (5,000 psig)	**300/3600**	300 psig to 3,600 psig (5,000 psig)
	145/1750	145 psig to 1,750 psig (5,000 psig)	**450/4600**	450 psig to 4,600 psig (5,000 psig)
	145/2320	145 psig to 2,320 psig (5,000 psig)		
ELECTRICAL CONNECTIONS†	**1**	DIN EN 175301-803 Form A w/ 36" Cable	**25**	M12 x 1 4-Pin*
	8	DIN EN 175301-803 Form A	**46**	DIN EN 175301-803 Form A with LED Status Indicator
OPTIONS	**EP**	EPDM Diaphragm (-40/212 °F)	**SP**	Factory Adjusted Switch Point
	HNBR	Low Temp NBR Diaphragm (-40/176 °F)	**VT**	FKM Diaphragm (0/212 °F)

Please consult your local NOSHOK Distributor or NOSHOK, Inc. for availability and delivery information.

* Available in adjustment ranges to 225 psig

† Other electrical connections available, consult factory

EXAMPLE

400V – 3 – 2 – 5/28-vac – 8

Series ..... 400 Vacuum Series
Switch function ..... Single pole double throw
Process connection ..... 1/4" NPT Male
Adjustable range ..... -5 inHg to -28 inHg (350psig)
Electrical connection ..... DIN EN 175301-803 Form A

Switch Wiring Diagrams

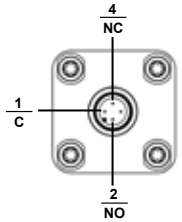

M12x1 (4-Pin)

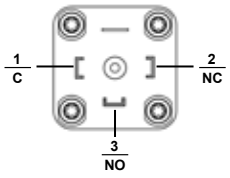

DIN EN 175301-803 Form A

Dimensions

DIN EN 175301-803 Form A

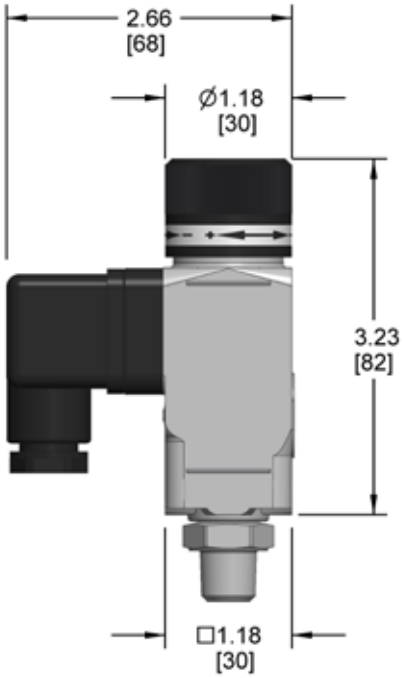

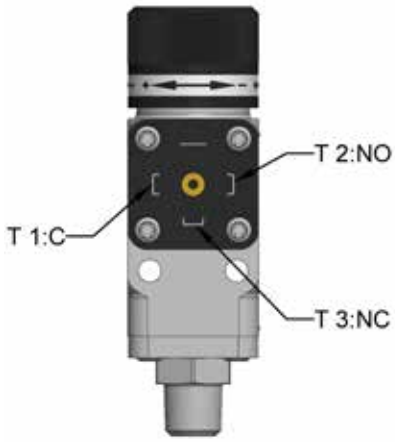

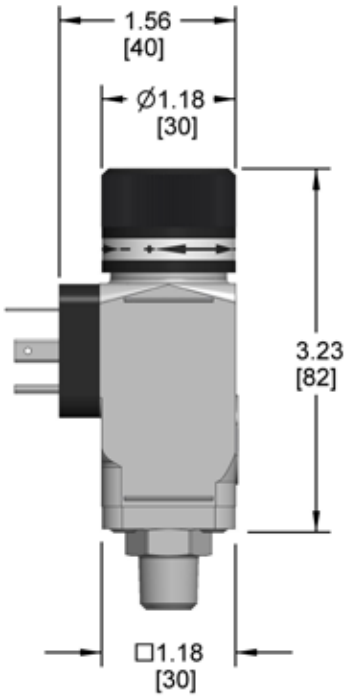

M12 x 1 4-Pin

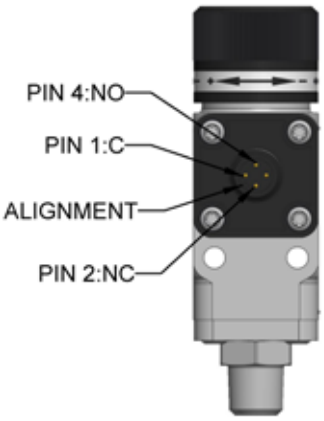

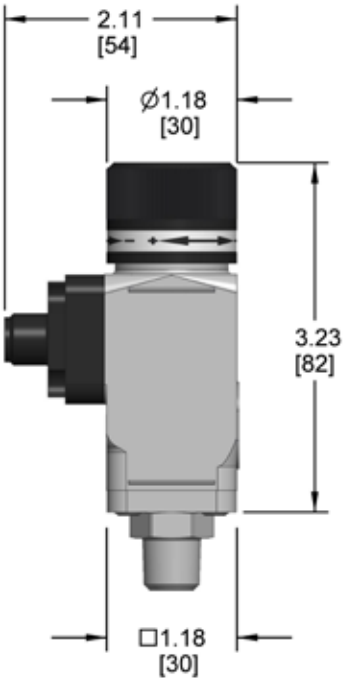

PISTON-TYPE SNUBBERS

- Resist clogging and are self cleaning
- Five different sized pistons included with each snubber to ensure the correct amount of snubbing for virtually every application
- Available in Brass and 316 Stainless Steel in 1/4″ NPT, 1/2″ NPT or SAE J1926-3: 7/16-20
- Weight approximately 0.2 lb. for 1/4" & 7/16", and approximately 0.4 lb. for 1/2"

Options & Accessories

Piston-Type Snubbers Specifications

PART NO.	SIZE	MATERIAL	PRESSURE RATING
1325	1/4″ NPT	Brass	6,000 psi
1335	SAE J1926-3:7/16-20	Brass	5,000 psi
1350	1/2″ NPT	Brass	6,000 psi
5025	1/4″ NPT	316 Stainless Steel	15,000 psi
5035	SAE J1926-3:7/16-20	316 Stainless Steel	8,000 psi
5050	1/2″ NPT	316 Stainless Steel	15,000 psi



Piston-Type Snubbers

DIMENSIONS		1/4" NPT	1/2" NPT	SAE J1926-3: 7/16-20
A	IN	0.812	1.125	0.812
	MM	20.6	28.6	20.6
B	IN	1.60	1.875	1.60
	MM	40.6	47.6	40.6
C	IN	1.04	1.25	1.24
	MM	26.4	31.8	31.5
D	IN	0.56	0.625	0.36
	MM	14.2	15.9	9.1

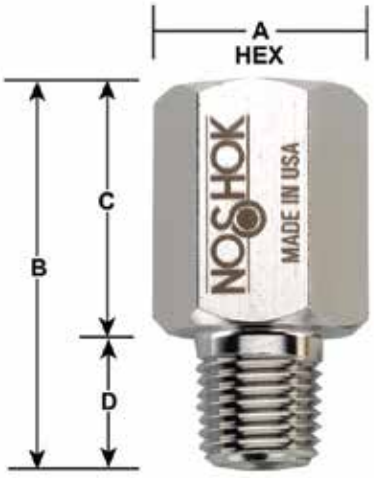

PISTON	SUGGESTED USE
A, B*	Gases
B, C	Water
C, D	Light Oil
E	Heavy Oil

* Snubber assembled and shipped with the B piston installed

⚠ **WARNING:** This product can expose you to chemicals including Lead and/or Nickel, which are known to the State of California to cause cancer and birth defects or other reproductive harm. For more information go to www.P65Warnings.ca.gov.

NOSHOK

SINTERED SNUBBERS

- Cost effective solution to protect expensive instrumentation
- Increases gauge readability by smoothing out pressure surges, pulsations and spikes
- 5 basic elements available for each snubber to accommodate specific application needs
- Snubbing action achieved by utilizing a corrosion resistant 316 Stainless Steel sintered porous element
- Exotic materials or intermediate disc grades available
- Provides long service life with no moving parts to wear out
- Weight approximately 0.2 lb. for 1/4" & 7/16", and approximately 0.4 lb. for 1/2"



Sintered Snubbers

Options & Accessories

Sintered Snubbers Specifications

PART NO.	SIZE	MATERIAL	PRESSURE RATING
1125-X	1/4" NPT	Brass	6,000 psi
1135-X	SAE J1926-3:7/16-20	Brass	5,000 psi
1150-X	1/2" NPT	Brass	6,000 psi
5125-X	1/4" NPT	316 Stainless Steel	15,000 psi
5150-X	1/2" NPT	316 Stainless Steel	15,000 psi

Note: The "X" in the part number denotes the Disc option (example: 1135-C).
See chart below for Disc options.

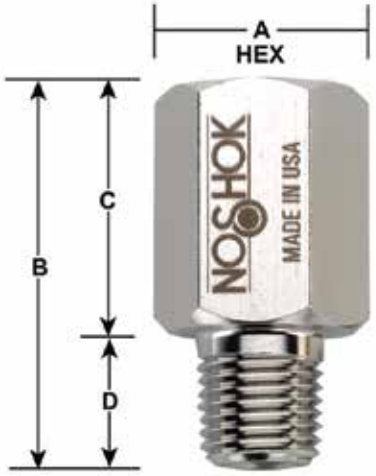

DIMENSIONS		1/4″ NPT	1/2″ NPT	SAE J1926-3 :7/16-20
A	IN	0.812	1.125	0.812
	MM	20.6	28.6	20.6
B	IN	1.60	1.875	1.60
	MM	40.6	47.6	40.6
C	IN	1.04	1.25	1.24
	MM	26.4	31.8	31.5
D	IN	0.56	0.625	0.36
	MM	14.2	15.9	9.1

Sintered Snubbers Replacement Disc Options

DISC GRADE	PART NO.	AVERAGE AIR FLOW ESTIMATE	MICRON GRADE (reference)	SUGGESTED USE
A	PD8-A-SS1	0.25 L/MIN @ 1 psi	2	Gases
B	PD8-B-SS1	0.63 L/MIN @ 1 psi	10	Gases, Water
C	PD8-C-SS1	1.46 L/MIN @ 1 psi	20	Water, Light Oil
D	PD8-D-SS1	2.79 L/MIN @ 1 psi	40	Light Oil
E	PD8-E-SS1	3.14 L/MIN @ 1 psi	60	Heavy Oil

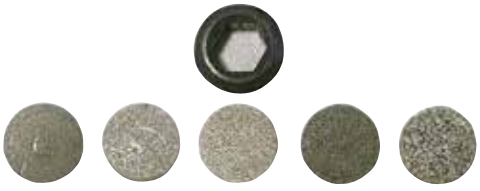

Sintered Snubbers Replacement Discs

⚠ **WARNING:** This product can expose you to chemicals including Lead and/or Nickel, which are known to the State of California to cause cancer and birth defects or other reproductive harm. For more information go to www.P65Warnings.ca.gov.

PIGTAIL STEAM SYPHONS

- Protect the instrument from the damaging effects of high temperature steam
- Recommended for use in steam applications and systems that contain superheated vapor
- Available in 1/4″ and 1/2″ NPT sizes in welded Steel, welded 316 Stainless Steel or seamless 316 Stainless Steel with ratings to 3,800 psi @ 850 ºF



Product Specifications

PART NO.	COIL STYLE	SIZE	MATERIAL
1225	90°	1/4″ NPT	Welded Steel, schedule 40
1250		1/2″ NPT	Welded Steel, schedule 80
2225		1/4″ NPT	Welded 316SS, schedule 40
2250		1/2″ NPT	Seamless 316SS, schedule 80
1025	180°	1/4″ NPT	Welded Steel, schedule 40
1050		1/2″ NPT	Welded Steel, schedule 80
2025		1/4″ NPT	Welded 316SS, schedule 40
2050		1/2″ NPT	Seamless 316SS, schedule 80
1425	270°	1/4″ NPT	Welded Steel, schedule 40
1450		1/2″ NPT	Welded Steel, schedule 80
2325		1/4″ NPT	Welded 316SS, schedule 40
2350		1/2″ NPT	Seamless 316SS, schedule 80
1525	360°	1/4″ NPT	Welded Steel, schedule 40
1550		1/2″ NPT	Welded Steel, schedule 80
2525		1/4″ NPT	Welded 316SS, schedule 40
2550		1/2″ NPT	Seamless 316SS, schedule 80



Pigtail Steam Syphons

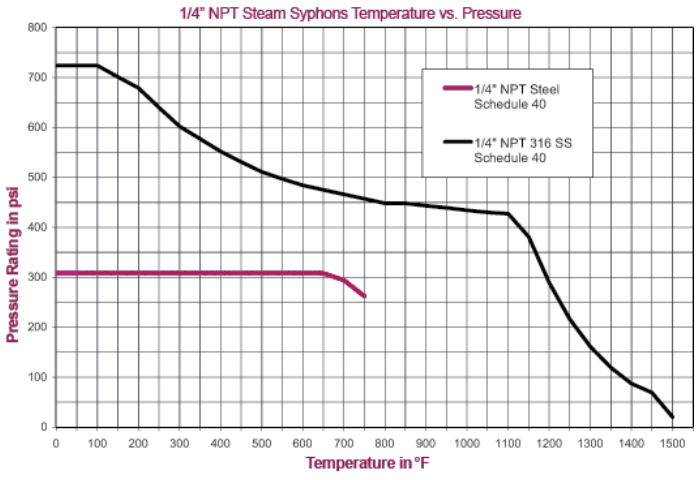

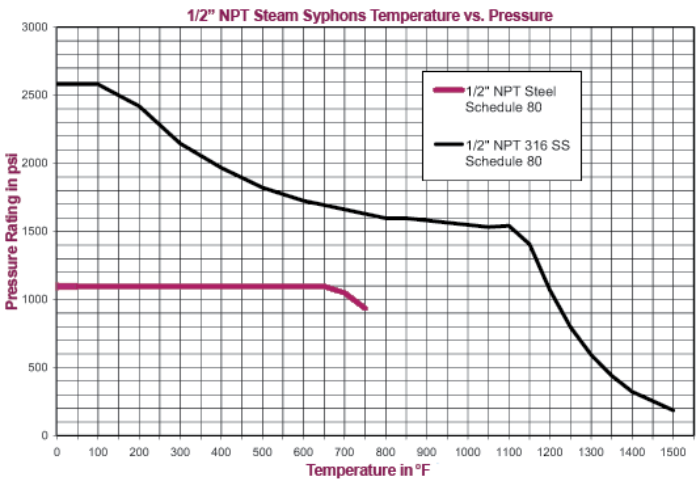

WARNING: This product can expose you to chemicals including Nickel, which are known to the State of California to cause cancer and birth defects or other reproductive harm. For more information go to www.P65Warnings.ca.gov.

90° Syphon

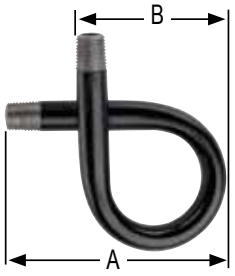

180° Syphon

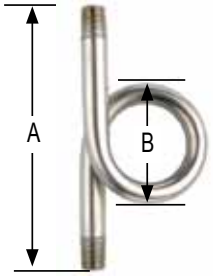

270° Syphon

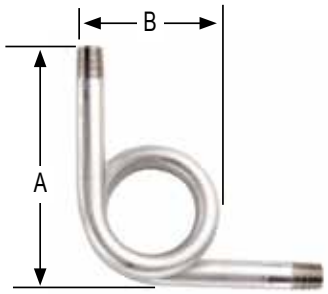

360° Syphon

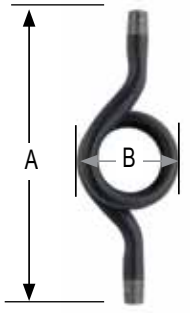

CONNECTION SIZE			1/4″ NPT	1/2″ NPT
90°	A	IN MM	4.25 107.95	6.5 165.1
	B	IN MM	2.625 66.675	4.0 101.6
180°	A	IN MM	5.5 139.7	8.875 225.425
	B	IN MM	2.5 63.5	4.0 101.6
270°	A	IN MM	4.5 114.3	7.5 190.5
	B	IN MM	2.625 66.675	4.0 101.6
360°	A	IN MM	7.25 184.15	12.0 304.8
	B	IN MM	2.625 66.675	4.125 104.775

SWIVEL ADAPTORS

- Temperature ratings: 15,000 psi @ 200 °F and 3,000 psi @ 1,000 °F
- Used with gauges and gauge valves to adjust the line of sight
- Rotates 360° to allow the connected instrument to be positioned in the desired direction
- The pressure connection is achieved with a tapered cone style compression fitting simply by tightening the swivel hex nut
- All 316 Stainless Steel construction
- Standard with 1/2″ NPT male process – 1/2″ NPT female instrument connections
- Also available with 1/4″ NPT connections, same specifications apply
- Weight approximately 0.8 lb.

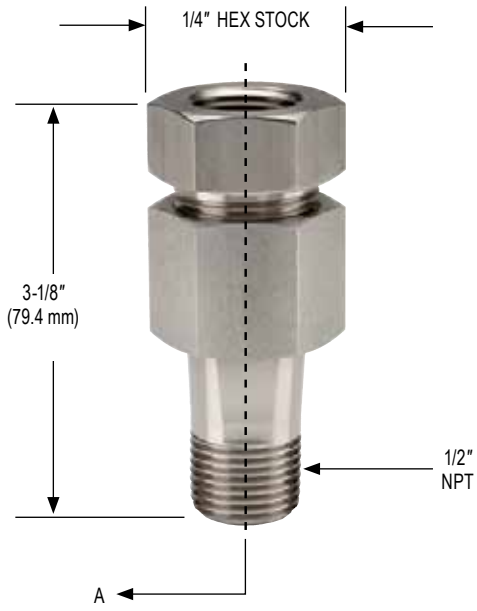

WARNING: This product can expose you to chemicals including Nickel, which is known to the State of California to cause cancer. For more information go to www.P65Warnings.ca.gov.

Gauge Configurations for High Temperature Applications

140 °F is the maximum recommended ambient media temperature for NOSHOK pressure gauges with Brass wetted parts, and 212 °F for gauges with Stainless Steel wetted parts. For applications in which media reaches temperatures above 212 °F, NOSHOK offers several accessories designed to prevent damage to the gauge, and maintain maximum performance and accuracy.

Recommended gauge configurations are listed below. Please note that these guidelines are intended to be general recommendations. Many conditions may affect the amount of temperature reduction; including ambient temperature, media type, and process configuration.

- **Up to 140 °F:** All NOSHOK pressure gauges will provide peak performance in this range
- **Up to 212 °F:** A gauge with Stainless Steel wetted parts is required, such as the NOSHOK 400 and 740 Series. Do NOT use a gauge with Brass wetted parts.
- **Up to 287 °F:** Accessories must be used to maintain gauge integrity and accuracy. Options include:
    - **Pigtail Steam Syphon:** For use with a Stainless Steel wetted parts gauge. Should be used in steam applications and systems that contain superheated vapor. The pigtail buffers the instrument from the damaging effects of high temperature steam by holding system fluid in the coil to provide a steam trap for the fluid to condensate and dissipate the heat. Reduces temperature by 75° F/ft. on average. Multiple configurations are available.
    - **Armored Capillary Tube:** For use with a Stainless Steel wetted parts gauge. Average temperature reduction is 75 °F/ft. Two feet of capillary tube can increase the media temperature range to 362 °F. Standard length is five feet, provided with thread connections; other lengths available on request. Gauge must be separated from the process with a mounting bracket or flange, and the extra capillary length can be rolled up if necessary. Recommended for use with clean media or gases.
    - **Long Pipe:** 1/2" in diameter or greater in either Steel or Stainless Steel construction with a Stainless Steel wetted parts gauge. Average temperature reduction is 75 °F/ft. Pipes can be cut and threaded for custom applications.
    - **Cooling Element:** For use with a Stainless Steel wetted parts gauge. Average temperature reduction is 75 °F/4" element. Use with other accessories for additional temperature decrease (long pipe, syphon, diaphragm seal).
    - **Cooling Tower:** For use with a Stainless Steel wetted parts gauge. Approved usage up to temperatures of 312 °F. Average temperature reduction is 100 °F/8" cooling tower. Recommended for use with clean media or gases.
- **Up to 300 °F:** A high temperature system fill is required, such as silicone D.C 550, and a diaphragm seal is recommended on a Stainless Steel wetted parts gauge.

For more information, contact NOSHOK at 440.243.0888

Process Conditions That Affect Pressure Gauge Accuracy & Performance

The technology used in today's pressure gauges has been around since the mid-eighteen hundreds, and the pressure gauge is still one of the most common methods of measuring pressure today. The majority of pressure gauges today still incorporate the Bourdon tube, socket, and geared movement; along with a pointer and dial to indicate process pressure.

Since the pressure gauge is a purely mechanical device, attention to three process conditions is necessary. The three factors that can adversely affect accuracy and performance are **Temperature, Vibration and Pulsation.**

Temperature Influence:
For every 18 °F (10 °C) shift in temperature from which the gauge is calibrated, the user can experience up to a ±0.4% additional error. The cause is the change in the elasticity or spring rate of the Bourdon tube element with temperature. While it is difficult to circumvent the influence of ambient temperature, we can address the influence of process temperature. In steam service, the common practice is to install coil syphons or pigtail syphons to dissipate process heat. Another common practice is to install a diaphragm seal with capillary to separate the gauge from the high heat source. There are many options available with fill fluid in the seal and capillary system to withstand temperatures up to 600 °F. In severe cold ambient conditions, many users elect to heat trace their instrumentation via electric or steam trace. Process and ambient temperature is an important consideration when selecting and applying pressure gauges.

Vibration Influence:
Vibration due to pumps, motors, and other rotating equipment can cause excess wear and possible premature failure of internal working parts of a pressure gauge, which include the Bourdon tube and the movement or gear mechanism. Vibration also causes difficulty in accurate reading of the gauge, due to pointer oscillation. One of the most common causes of pressure gauge failure is exposure to continuous vibration. The most widely accepted remedy is to utilize a liquid filled pressure gauge. The fill fluid of choice is either Glycerin or Silicone. Liquid filled gauges address not only pointer oscillation, but also serve to protect and lubricate the internal geared movement.

Pulsation Influence:
Process pulsation can occur around the discharge of pumps as well as quick operating valves. Many users assume that liquid filling a pressure gauge will fully address pulsation. Although a liquid filled gauge helps to dampen the effects of pulsation, it often does not fully address this process condition. Pulsation dampeners are installed upstream of the gauge socket and they can be a piston-type snubber, a sintered metal snubber, or a threaded in-flow restrictor in the socket of the gauge. A needle valve installed upstream of the gauge that is "pinched down" or slightly opened, is another common practice to address pulsation. It is not recommended to rely solely on a needle valve to address pulsation, due to the fact that the user could inadvertently open the valve, and thereby negate flow restriction. In clean fluids (gases or clean low viscosity liquids) a threaded orifice/flow restrictor or a sintered metal snubber is the least costly way to address pulsation. In dirtier and higher viscosity fluids a piston snubber is usually installed.

Summary:
Temperature, vibration and pulsation are three process conditions that adversely affect a pressure gauge. Being aware of these three process conditions, and taking the necessary steps to address them, can help minimize accuracy errors and add to the service life of the pressure gauge.

NOSHOK Transducer and Transmitter Pressure Sensing Technologies

Diffused Silicon Semiconductor Strain Gauge Sensor (used in 100, 200, 612, 613, 615, 616, 621, 622, 623, 624, 625, 626, 627, 640 and 650 Series - ranges up to 0 psi to 300 psi)



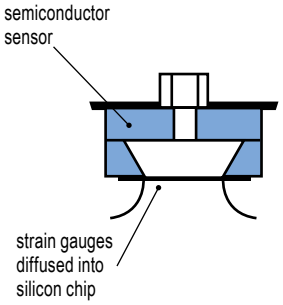

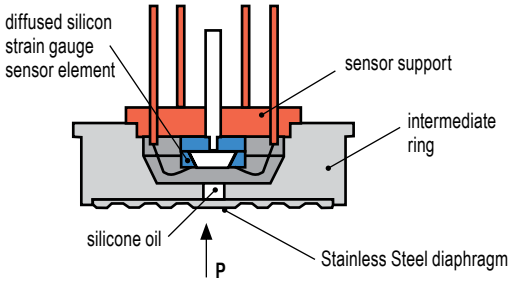

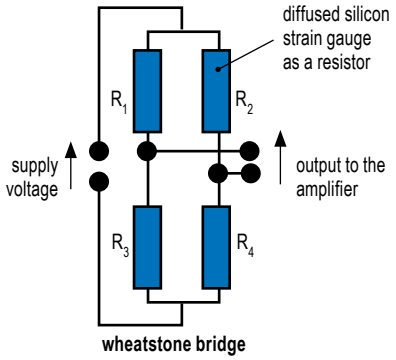

Sputtered Thin Film Strain Gauge Sensor (used in 100, 200, 612, 613, 615, 616, 621, 622, 623, 624, 625, 626, 627, 640, 650, 660, 800/810 Series - ranges 0 psi to 500 psi and higher)



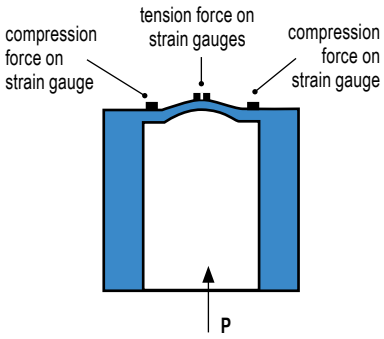

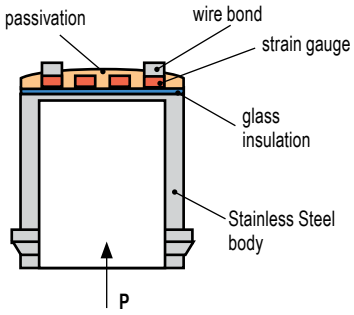

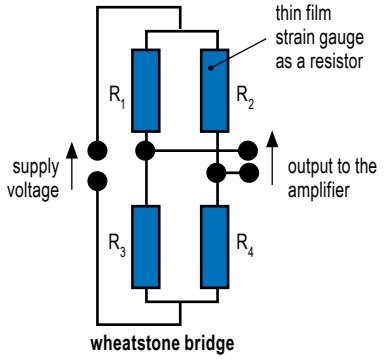

Ceramic Thick Film Strain Gauge Sensor (used in 800/810 and 1000 Series)



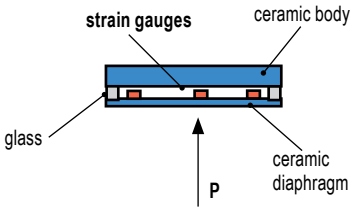

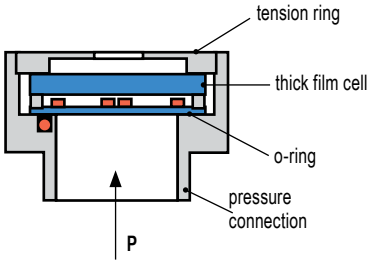

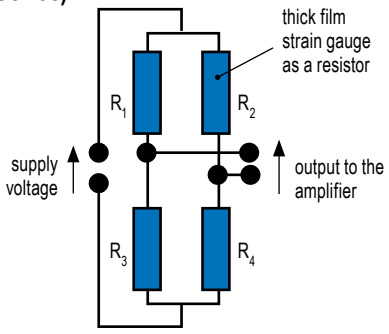

Hall Effect Sensor



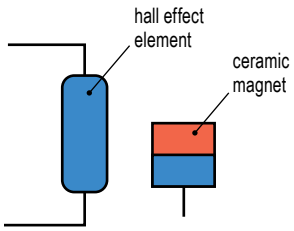

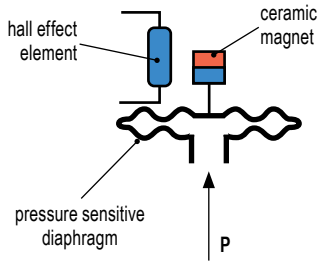

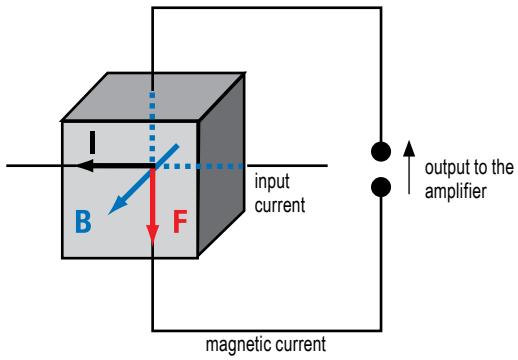

Accuracy according to IEC 61298-2

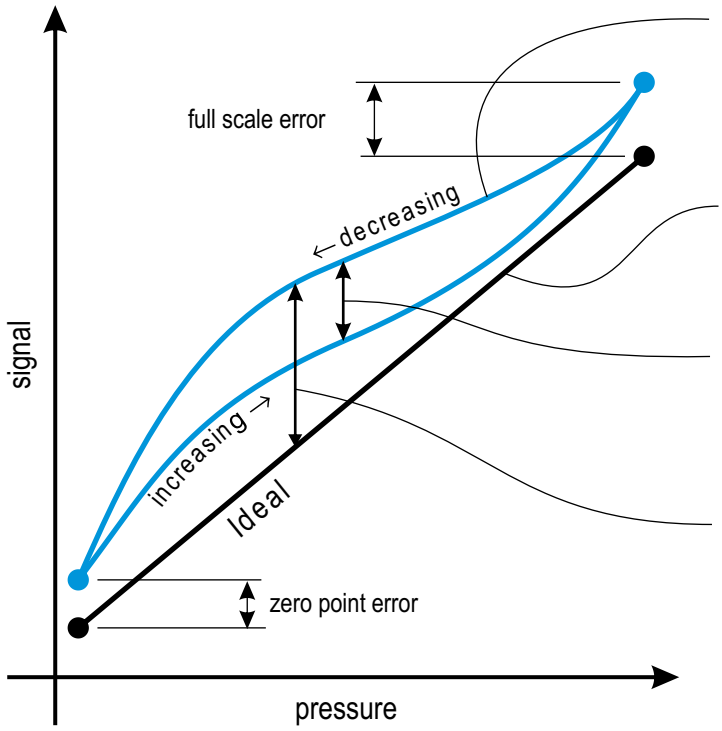

Definitions

Characteristic Curves:
A smooth curve generated through data points recorded from actual input pressures and output signals at increasing and decreasing pressures (upscale and downscale readings)

Ideal Characteristic Line :
A straight line representing an ideal linear relationship between the input pressure and output signal.

Hysteresis:
The maximum difference between the characteristic lines recorded at increasing and decreasing pressure. Expressed in percent of ideal span.

Accuracy :
The maximum deviation from an ideal characteristic line including the effects of non-linearity, hysteresis, non-repeatability, zero point and full scale errors. Expressed in percent of ideal span

Non-Repeatability :
The maximum deviation between values of output for any single input of multiple cycles considering decreasing and increasing pressures separately.
Expressed in percent of ideal span.

Non-linearity according to IEC 61298-2

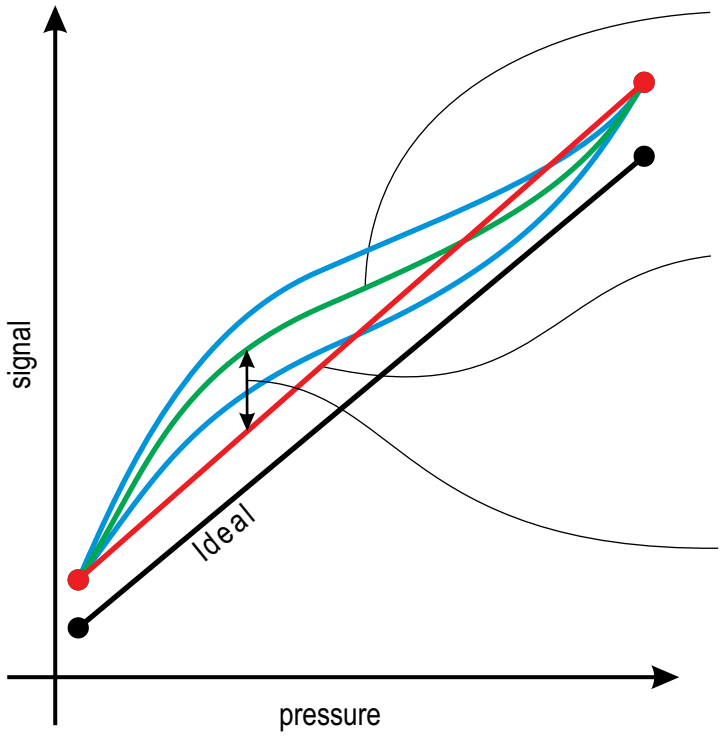

Averaged Characteristic Curve:
A single curve generated through the averaged data of input pressures and output signals at increasing and decreasing pressures. (average of upscale and downscale curves)

Reference line (TP or BFSL):
A straight line coinciding with the actual output data and the averaged characteristic curve.
(TP)Terminal Point connects the actual zero point value and the full scale value
(BFSL) Best Fit Straight Line connects the data using the least square method to minimize the maximum deviation
TP ≅ 2 X BFSL

Non-Linearity:
The maximum deviation from the averaged characteristic line to the the reference line.
Expressed in percent of ideal span.

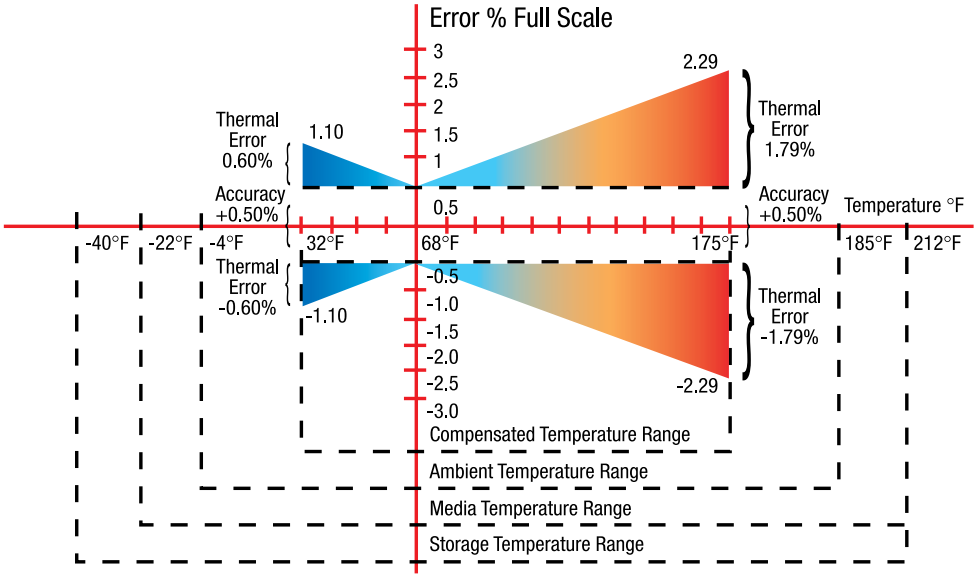

Temperature Performance 100 Series Pressure Transmitter

The above diagram illustrates transducer performance related to the temperature of the environment and media being measured.

The graph shows the worst case performance of the series 100 pressure transmitter as an example (other series follow the same pattern). The thermal specification as indicated in the 100 series specifications is given in a worst case coefficient for the combined effects on zero and span. The definitions are as follows.

The **Compensated Temperature Range** is the thermal band over which the effect specification is guaranteed. For the 100 series, the coefficient is +/-0.0167% full scale per °F. This means that over the compensated temperature range the thermal boundaries are straight lines as shown. This is sometimes called a “bow-tie effect” or “butterfly effect”.

The **Ambient Temperature Range** is the maximum and minimum ratings over which the transducer will output a correct signal.

The **Media Temperature Range** is the maximum and minimum ratings of the media at the process connection.

The **Storage Temperature Range** is the maximum and minimum ratings for no damage on the shelf.

The Minimum Power Supply Voltage Required For A 2-Wire 4 mA to 20 mA Loop

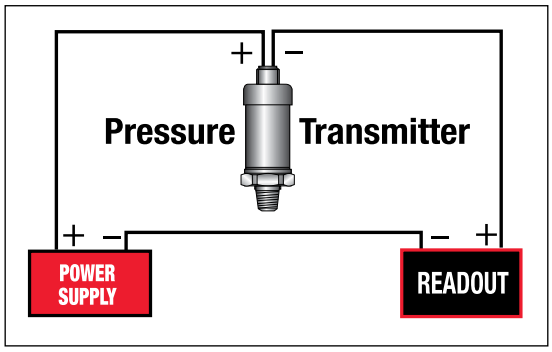

Single instrument 2 wire current loop

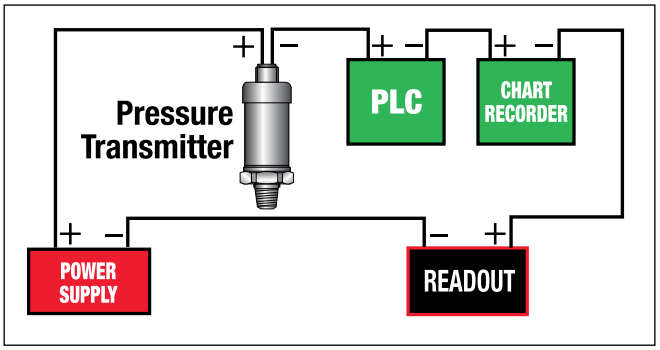

Single instrument 2 wire current loop

For the single instrument 2 wire current loop, the minimum power supply voltage is equal to the required voltage across the transmitter plus the voltage drop across the instrumentation plus the voltage drop caused by the resistance of the wiring.

As an example, for a 100 series (4 mA to 20 mA output) pressure transmitter, Vtransmitter = 10 Vdc

Vwiring = Resistance of the wiring (handbook data) X 20 mA maximum current flow in the circuit. If the instrumentation has an input resistance of 250 Ω and if the resistance of the wiring is minimal (100 ft of 24 AWG leadwire has less than 0. 6 Ω (negligible) of resistance), then the calculation including the leadwire is as follows:

Vmin = 10 Vdc + (250 Ω) x .020 Amp + (0.6 Ω) x .020 Amp = 15.012 Vdc

The power supply must provide at least this voltage with the current consumption of .020 Amp.

In a multiple instrument 2 wire current loop, if the second instrument also has an input resistance of 250 Ω, then a second component on the right side of the equation must be included. In this case, the Vmin= 20.012 Vdc. A power supply of 24 Vdc, 1 Amp would be a typical choice.

If there is more than 1 transmitter loop operating off of the same power supply then the current (.020 Amp) must be multiplied by the number of loops. It is recommended that the power supply provide 20% to 30% higher excitation voltage than that calculated above.

Load Limitations 4 mA to 20 mA output
$V_{min} = 10V + (.020 \times R_L)$
R_L = Loop resistance (Ω)
$R_L = R_S + R_W$
R_S = Sensor resistance (Ω)
R_W = Wire Resistance (Ω)

Measuring The Pressure Of High Temperature Media

In many applications the medium that the transducer or transmitter will contact may be at an elevated temperature beyond the operational limit of the measuring instrument. Selecting an instrument with a high temperature rating or using diaphragm seals to provide isolation from the medium may not be feasible from a design or economic standpoint.

One way to address this situation is to mount the instrument with a short length of tubing away from the hot area where the measurement needs to be made. With a dead ended pressure chamber, the tubing will effectively dissipate much of the heat and bring the medium in contact with the measuring instrument down to a lower temperature that is within its safe and accurate limit.

The following chart provides the basic information needed to determine the size and material of the tubing needed.

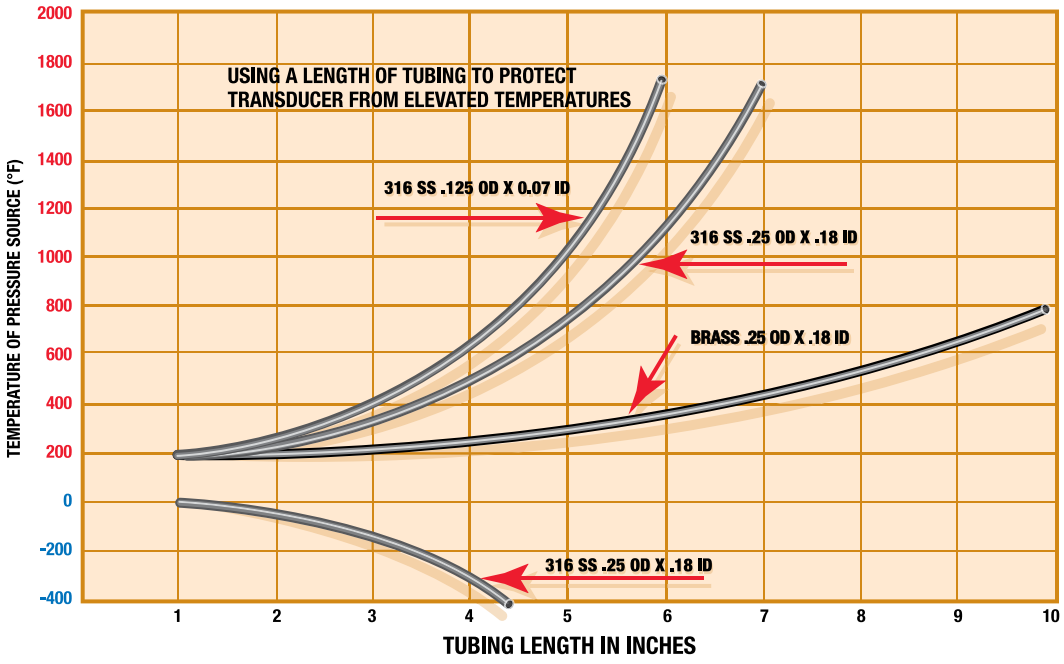

These curves are based upon the following assumptions:

1. The pressure vessel is insulated to limit radiant heat transfer to the transducer – the major source of thermal input is via the connecting tube.
2. The pressure medium has a coefficient of thermal conductivity less than .4btu / hr / ft^2 / ft / °F. This figure encompasses a wide range of liquids and gases.
3. The ambient temperature TA around the transducer is 100 °F.
4. The heat transfer rate (convection) from the tubing to still air is 1.44btu / ft^2 / hr / °F.

IP Environmental Protection Codes

First Numeral - Protection from Particles

0 No protection
1 Particles >50 mm
2 Particles >12 mm
3 Particles >2.5 mm
4 Particles >1 mm
5 Dust protected - limited ingress, no deposits ingress permitted
6 Dust tight - totally protected

IP (first numeral, second numeral), for example IP67

Second Numeral - Protection from Water

0 No protection
1 Vertical falling water
2 Direct sprays up to 15° from vertical
3 Direct sprays up to 60° from vertical
4 Direct sprays from all directions - limited ingress permitted
5 Low pressure jets of water from all directions - limited
6 Strong jets of water from all directions
7 Immersion in water from 15 cm to 1 m
8 Immersion in water under pressure for long periods of time
9 High pressure steam jet up to 100 bar

Environmental ratings on NOSHOK transducers are indicated with the individual specifications throughout this catalog. The following ratings are used and this is how they are defined.

IP65 Totally protected from dust as well as protection from low pressure jets of water from all directions - limited ingress permitted (no effect on performance)
IP67 Dust tight and capable of immersion in water from 15 cm to 1 m
IP68 Capable of immersion in water for long periods of time.
IP69K Capable of steam jet washdown.

Since IP65, NEMA 4 and NEMA 4X are related, the differences are in the standards used in qualification. Here they are:

	IP65	**NEMA 4**
Method	Stream of water	Stream of water
Nozzle Size	1/2 "	1 "
Distance	10 ft	10 ft
Duration	15 minutes	5 minutes
Direction	All angles	All angles
Pressure/Flow	10 m of water	65 gallons/min.

In order to meet the standard, the IP65 test results allow some ingress of water as long as it does not affect the performance of the instrument. In order to meet the standard, the NEMA 4 test results do not allow any ingress of water. NEMA 4X includes the NEMA 4 standard requirements plus corrosion resistance.

Hazardous Location Classifications (NEC)

Class I: ***Areas in which flammable gases or vapors may be present in the air in sufficient quantities to be explosive***

Group A: Atmospheres containing acetylene

Group B: Atmospheres such as butadiene, ethylene oxide, propylene oxide, acrolein, or hydrogen (gases or vapors equivalent in hazard to hydrogen,such as manufactured gas)

Group C: Atmospheres such as cyclopropane, ethyl ether, ethylene, gas or vapors of equivalent hazard

Group D: Atmospheres such as acetone, alcohol, ammonia, benzene, benzol, butane, gasoline, hexane, lacquer solvent vapors, naphtha, natural gas, propane, or gas or vapors of equivalent hazard

Class II: ***Areas made hazardous by the presence of combustible dust***

Group E: Atmospheres containing combustible metal dusts, regardless of resistivity; dust of similarly hazardous characteristics having a resistivity of less than 100 KΩs-cm; electrically conductive dusts

Group F: Atmospheres containing combustible carbon black, charcoal, or coke dusts having more than 8% total volatile material; dusts so sensitized that they present an explosion hazard, and dusts having a resistivity of greater than 100 Ω-cm but less than or equal to 1x108 Ω-cm

Group G: Atmospheres containing combustible dust having resistivity equal to or greater than 100K Ω-cm; electrically nonconductive dusts

Class III: ***Areas made hazardous by the presence of easily ignitable fibers or dust, but which are not likely to be in suspension in the air in quantities that are sufficient to ignite***

Division 1: Atmospheres where hazardous concentrations exist continuously, intermittently or periodically under normal operating conditions

Division 2: Atmospheres where hazardous concentrations exist only in case of accidental rupture or breakdown of equipment

Hazardous Location Pressure Measurement with NOSHOK Pressure Transmitters

NOSHOK has solutions to your applications in areas with flammable gases and liquids. Let's start with the definitions related to equipment used in hazardous environments:

Intrinsic Safety Protection

Protection in which the measurement system contains only transmitters and associated equipment that are incapable of causing ignition of the surrounding flammable atmosphere. Normally an intrinsic safety barrier is employed between the transmitter which is located in the hazardous area and the downstream receiving equipment. This barrier contains a electrical network designed to limit the energy (voltage and current) available to the protected circuit in the hazardous location under specified fault conditions. NOSHOK 625, 626 and 627 Series are Factory Mutual and Canadian Standards Association approved as intrinsically safe.

Non-Incendive Protection

Protection in which the measurement may contain arcing or sparking equipment but is still incapable, under specified test conditions, of igniting the flammable gas, vapor or dust-air mixture. This applies only in Division 2 environments. An intrinsic safety barrier is not required in this measurement system. No special wiring is required. NOSHOK 623 and 624 Series are Factory Mutual and Canadian Standards Association approved as non-incendive.

Explosion-Proof Protection

Protection in which the enclosure of the transmitter is capable of withstanding an explosion of the specified gas or vapor that may occur within it and of preventing the ignition of a specified gas or vapor surrounding the enclosure by sparks, flashes or explosion of the gas or vapor within, and that operates at such an external temperature that a surrounding flammable atmosphere will not be ignited. Explosion-proof installation techniques are required including special electrical conduit and junction boxes. NOSHOK 621 and 622 Series are Factory Mutual approved as explosion-proof.

Why NOSHOK Is The Best Choice

- Stable sensing technologies mean that there is no need for periodic recalibration. NOSHOK transducers do not have glues, epoxies or adhesives in the transduction portion of the sensor module because such organic agents cause calibration drift with temperature and pressure cycling, and over time in some applications, cause complete failure.
- Broad product offering results in best fit of product configuration to customer application requirements.
- CE compliance and an environmentally hardened design mean maximum performance and reliability in difficult real world applications. Products are manufactured in an ISO 9001 certified facility.
- All product specifications are conservatively stated in the literature so that product performance exceeds customer expectations.
- No specsmanship or games are ever employed, only honest information.
- The calibration of every product is verified in NOSHOK's modern facility with the best available pressure controllers and computerized readout equipment that are at least 4 times the accuracy of the product being checked.
- Highly automated production minimizing the variations in product caused by human labor mean more consistency from unit to unit resulting in interchangeability and consistent performance.
- Simple and proven dc electronics improves reliability and longer mean time between failure (MTBF) characteristics.
- While field failures are few, NOSHOK backs it's electronic products with a 3-year warranty that is the best in the market.
- Products provide significant performance and application flexibility at competitive prices addressing the needs of the OEM and the user alike.
- As a privately owned and run business, NOSHOK employees focus on continually improving customer satisfaction.

Specsmanship - What to Look for in Comparing Other Transducers and Transmitters to NOSHOK Products

- Be on the lookout for suppliers specifying "high accuracy" with a low price. In many cases you will find indications of zero offsets and span offsets of up to 2% each. The specified accuracy of NOSHOK transducers includes any offsets and is a true accuracy upon which you can depend.
- If the competitors do not specify a long term stability specification, then this bears out our contention that many of these other sensing technologies do not yield an attractive stability specification otherwise it would be printed in the literature.
- Look out for the "typical" nomenclature or the Root-Sum-Square (RSS) designation. While these methods provide a statistical probability of how most of the products will perform, it means that if a quantity of units is considered then a percentage of the products will not meet the listed specification. NOSHOK specifications are worst case, so all the transducers meet that specification.

NOSHOK Transmitters/Transducers Wiring Diagrams & Electrical Connections for 100, 200, 300, 612, 615/616, 640, 660 and 800 Series

Installation: NOSHOK pressure transmitters/transducers may be mounted in any plane with negligible effect on performance. Although these units are designed and manufactured to withstand substantial shock and vibration, it is recommended that they be mounted in an area of minimal vibration. Always use a wrench on the wrench flats when installing. NEVER use a pipe wrench on the housing or in the area of the electrical connection.

Maintenance/Calibration: NOSHOK pressure transmitters/transducers require no maintenance. Recalibration is dependent on the users Quality Assurance Program. If no program is in place, NOSHOK recommends a 1 year cycle.

Alignment Procedure

Using a pressure source and meter with adequate accuracy, perform the following steps:

- Open sensor
- With no pressure applied,adjust the "Z" potentiometer for the correct Zero output
- Apply the correct full scale pressure to the unit
- Adjust the "S" potentiometer for the correct Span output

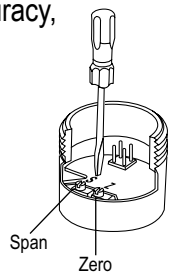

SERIES 100

Current output, 2 wire

Wiring – DIN EN 175301-803 Form C connector

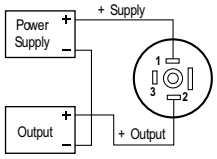

Wiring – M12 x 1 (4-pin) round connector

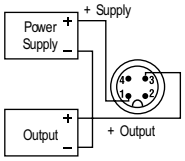

2 WIRE WIRING DIAGRAM EXAMPLE

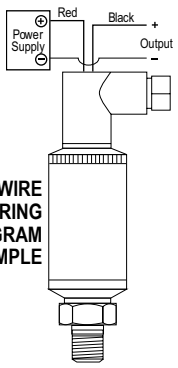

Load Limitations
4 mA to 20 mA Output Only

Vmin = 10V + (.020 x R_L)
R_L = R_S + R_W
R_L = Loop Resistance (Ωs)
R_S = Sense Resistance (Ωs)
R_W = Wire Resistance (Ωs)

100 Series	4 mA to 20 mA	
CONNECTION TYPE (CODE)	V+	V-
DIN EN 175301-803 Form C (7)	1	2
DIN EN 175301-803 Form C w/ Cable (1)	Red	Black
4 or 6-Pin Bayonet (2 or 3)	A	B
1/2" NPT Conduit w/ Cable (6)	Red	Black
M12 x 1, 4-Pin (25)	1	3
Integral Cable (36)	Red	Black

SERIES 200

Voltage output, 3 wire

Wiring – DIN EN 175301-803 Form C connector

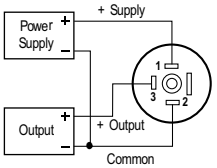

Wiring – M12 x 1 (4-pin) round connector

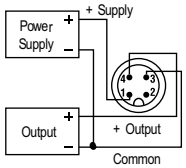

3 WIRE WIRING DIAGRAM EXAMPLE

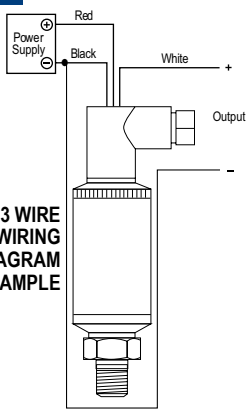

200 Series	0-5 Vdc, 1-5 Vdc, 1-6 Vdc, 0-10 Vdc, 1-11 Vdc		
CONNECTION TYPE (CODE)	V+	COMMON	OUTPUT
DIN EN 175301-803 Form C (7)	1	2	3
DIN EN 175301-803 Form C w/ Cable (1)	Red	Black	White
4 or 6-Pin Bayonet (2 or 3)	A	B	C
1/2" NPT Conduit w/ Cable (6)	Red	Black	White
M12 x 1, 4-Pin (25)	1	3	4
Integral Cable (36)	Red	Black	White

SERIES 612 & 613

2 WIRE WIRING DIAGRAM EXAMPLE

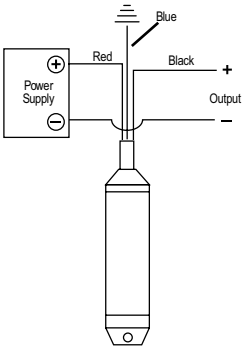

Load Limitations
4 mA to 20 mA Output Only

Vmin = [10V + (.020 x RL)] - RC
RL = RS + RW
RL = Loop Resistance (ohms)
RS = Sense Resistance (ohms)
RW = Wire Resistance (ohms)
RC = 0.0435 x cable length (ft.)

612 & 613 Series	4 mA to 20 mA		
CONNECTION TYPE (CODE)	V+	V-	CASE GROUND
PUR Cable	Brown	Green	Gray
FEP Cable	Brown	White	Blue

3 WIRE WIRING DIAGRAM EXAMPLE

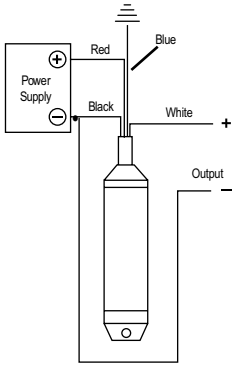

Load Limitations
4 mA to 20 mA Output Only

Vmin = [10V + (.020 x RL)] - RC
RL = RS + RW
RL = Loop Resistance (ohms)
RS = Sense Resistance (ohms)
RW = Wire Resistance (ohms)
RC = 0.0435 x cable length (ft.)

612 & 613 Series	0-5 Vdc, 0-10 Vdc, 0.5 to 2.5 Vdc			
CONNECTION TYPE (CODE)	V+	COMMON	OUTPUT	CASE GROUND
PUR Cable	Brown	Green	White	Gray
FEP Cable	Brown	Green	White	Gray

SERIES 615/616

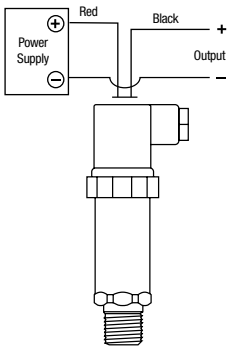

2 WIRE WIRING DIAGRAM EXAMPLE

Load Limitations
4 mA to 20 mA Output Only

Vmin = 10V + (.020 x R_L)
R_L = R_S + R_W
R_L = Loop Resistance (Ωs)
R_S = Sense Resistance (Ωs)
R_W = Wire Resistance (Ωs)

615 & 616 Series (2-wire)	4 mA to 20 mA	
CONNECTION TYPE (CODE)	V+	V-
DIN EN 175301-803 Form A (8 or 14)	1	2
DIN EN 175301-803 Form A w/ Cable (1)	Red	Black
6-Pin Bayonet (3)	A	B
1/2" NPT Conduit w/ Cable (6)	Red	Black
M12 x 1, 4-Pin (25)	1	3
Integral Cable (36)	Red	Black

615 & 616 Series (3-wire)	0-5 Vdc, 1-5 Vdc, 1-6 Vdc, 0-10 Vdc, 1-11 Vdc		
CONNECTION TYPE (CODE)	V+	COMMON	OUTPUT
DIN EN 175301-803 Form A (8 or 14)	1	2	3
DIN EN 175301-803 Form A w/ Cable (1)	Red	Black	White
6-Pin Bayonet (3)	A	B	C
1/2" NPT Conduit w/ Cable (6)	Red	Black	White
M12 x 1, 4-Pin (25)	1	3	4
Integral Cable (36)	Red	Black	White

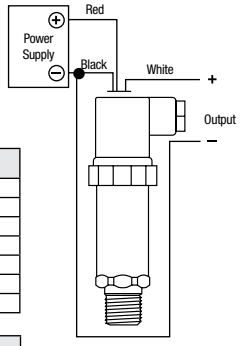

3 WIRE WIRING DIAGRAM EXAMPLE

SERIES 640

Wiring - M12 x 1 (4-pin) round connector

Current output, 2 wire

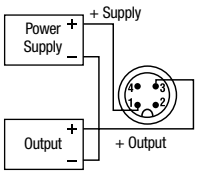

Voltage output, 3 wire

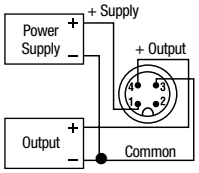

Load Limitations
4 mA to 20 mA Output Only

Vmin = 10V + (.020 x R_L)
R_L = R_S + R_W
R_L = Loop Resistance (Ωs)
R_S = Sense Resistance (Ωs)
R_W = Wire Resistance (Ωs)

RS 232 Interface

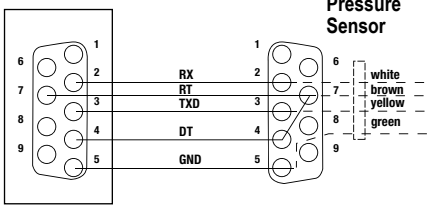

Pressure Sensor

SERIES 300

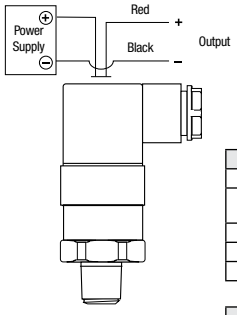

2 WIRE WIRING DIAGRAM EXAMPLE

Load Limitations
4 mA to 20 mA Output Only

Vmin = 10V + (.020 x R_L)
R_L = R_S + R_W
R_L = Loop Resistance (Ωs)
R_S = Sense Resistance (Ωs)
R_W = Wire Resistance (Ωs)

300 Series (2-wire)	4 mA to 20 mA	
CONNECTION TYPE (CODE)	V+	V-
DIN EN 175301-803 Form A (8 or 14), DIN EN 175301-803 Form C (7)	1	2
DIN EN 175301-803 Form A w/ Cable (1)	Red	Black
M12 x 1, 4-Pin (25)	1	3
Integral Cable (36)	Brown	Blue

300 Series (3-wire)	0-5 Vdc, 1-5 Vdc, 1-6 Vdc, 0-10 Vdc, 1-11 Vdc		
CONNECTION TYPE (CODE)	V+	COMMON	OUTPUT
DIN EN 175301-803 Form A (8 or 14), DIN EN 175301-803 Form C (7)	1	2	3
DIN EN 175301-803 Form A w/ Cable (1)	Red	Black	White
M12 x 1, 4-Pin (25)	1	3	4
Integral Cable (36)	Brown	Blue	Black

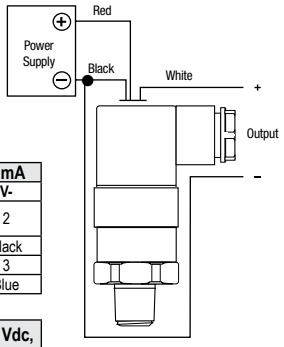

3 WIRE WIRING DIAGRAM EXAMPLE

SERIES 800

4 mA to 20 mA, 2 wire

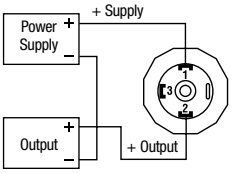

0 Vdc to 10 Vdc, 3 wire

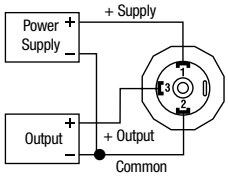

Load Limitations
4 mA to 20 mA Output Only

Vmin = 10V + (.020 x R_L)
R_L = R_S + R_W
R_L = Loop Resistance (Ωs)
R_S = Sense Resistance (Ωs)
R_W = Wire Resistance (Ωs)

800 Series	4 mA to 20 mA 2-wire
V+	Red/1
Output	Black/2

800 Series	Voltage Output, 3-wire
V+	Red/1
Common	Black/2
Output	White/3

SERIES 660

Wiring –
DIN EN 175301-803
Form C connector

Current output, 2 wire

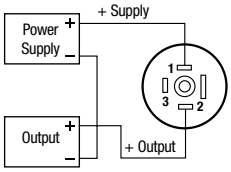

Voltage output, 3 wire

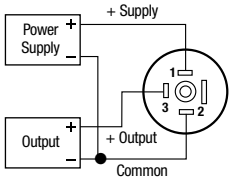

Load Limitations
4 mA to 20 mA Output Only

Vmin = 10V + (.020 x R_L)
R_L = R_S + R_W
R_L = Loop Resistance (Ωs)
R_S = Sense Resistance (Ωs)
R_W = Wire Resistance (Ωs)

660 Series (2-wire)	4 mA to 20 mA	
CONNECTION TYPE (CODE)	V+	V-
DIN EN 175301-803 Form C (7)	1	2
DIN EN 175301-803 Form C w/ Cable (1)	Red	Black
M12 x 1, 4-Pin (25)	1	3
Integral Cable (36)	Brown	Green

660 Series (3-wire)	1-5 Vdc, 0.1-10 Vdc		
CONNECTION TYPE (CODE)	V+	COMMON	OUTPUT
DIN EN 175301-803 Form C (7)	1	2	3
DIN EN 175301-803 Form C w/ Cable (1)	Red	Black	White
M12 x 1, 4-Pin (25)	1	3	4
Integral Cable (36)	Brown	Green	White

Wiring - M12 x 1 (4-pin) round connector

Current output, 2 wire

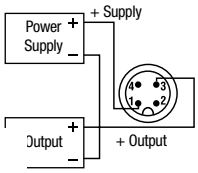

ltage output, 3 wire

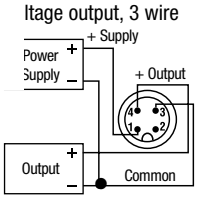

Q: What is the purpose of the ventable & non-ventable fill plug/relief plug?
A: A fill plug seals the fill hole in a pressure gauge case. On liquid filled pressure gauges, a ventable fill plug is used to relieve internal case pressures that occur due to thermal expansion of the fill fluid. In non-filled dry gauges, a non-ventable fill plug is used to occasionally drain the interior of the case from condensate or relieve internal case pressures. Ventable fill plugs incorporate a vent pin to open and close a hole for relieving internal case pressures and do not have to be removed from the case hole like non-ventable fill plugs.

Q: What are the designed overpressure ratings for NOSHOK gauges?
A: Overpressure ratings are specific to the gauge type, pressure range and accuracy ratings of the gauge. Normal overpressure protection can range from 1.1X to 1.3X depending on the gauge selected. NOSHOK gauges comply to the EN-837-1 and ASME B40.1 standards in regards to overpressure protection. When selecting a pressure gauge, it is recommended that the normal system pressure be maintained around half of the full range of the gauge as to avoid overpressure conditions. Overpressure protection of 3 times up to 10 times of the dial range is available on some series as a production option.

Q: How is the accuracy of a gauge affected by a Maximum Indicating Pointer?
A: A Maximum Indicating Pointer (MIP), also commonly referred to as a Tell Tale Pointer, adds an additional ±1% error to the pressure gauge due to the increase load on the Bourdon tube.

Q: What is a Certified Calibration?
A: Certified Calibrations provide the user with a serial numbered gauge along with a calibration certificate that it has been certified in accordance to the pressure gauge standard with instruments that are traceable to NIST with accuracies of at least 4 to 1.

Q: What is a Certificate of Conformance?
A: A Certificate of Conformance is a formal statement on company letterhead stating that an instrument complies with a particular standard. It contains the signatures of the required personnel. These Certificates are often needed to show industry inspectors that a system and its components are in compliance.

Q: How often does a gauge need to be calibrated?
A: NOSHOK pressure gauges require little or no calibration within the Warranty period. Some applications may be more aggressive than others, resulting in an increased frequency in the need for calibration. The environmental limitations for the pressure gauge series should be observed in all cases. Gauges used in situations outside these requirements may result in inaccuracies, premature wear and/or failure of the gauge and would require additional maintenance. The frequency of calibration, therefore, is up to the user to judge.

Q: When is it recommended to use an orifice?
A: Orifices are a type of snubber. On pressure systems that have rapidly increasing or decreasing pressure spikes, orifices lessen the effects of these energy pulses by blocking the wave energy using restricted flow. They are recommended in dynamic pressure applications with mild pressure spikes.

Q: When is a diaphragm seal used, and when would you apply a diaphragm seal and capillary?
A: A diaphragm is used to isolate and protect the instrument from the process media. Damaging process media may include corrosives, particulates, temperatures, or any state that is not suitable for direct contact with the measuring element. Diaphragms indirectly transmit system pressures by segregating the process pressure with a thin flexible membrane that in turn transfers the pressure through a fill fluid to the instrument. Diaphragms are often used in conjunction with capillaries to further distance the instrument from the process media. Capillary tubes transmit the diaphragm fill fluid to the instrument. Capillary tubes come in several lengths and provide the user a means to measure in a remote location and may also act as heat dissipaters in high temperature applications.

Q: What is the purpose of liquid filling a gauge, and in what applications would a liquid filled gauge be used?
A: Primarily, in applications that have vibrations or pulsations, liquid filling enables reading the dial pointer by dampening the movement. Liquid filling should be considered in any system that has high dynamic operating conditions. In general, liquid filling helps extend the life of a gauge. It reduces damaging resonance induced fracturing, reduces frictional wear, prevents aggressive ambient air from entering, prevents condensation formation, and improves reliability.

Q: How does temperature affect the accuracy of a pressure gauge?
A: Temperature changes affect the stiffness of a Bourdon tube. The stiffness change is produced by a combination of changes in the elastic (Young's) modulus and a change in linear dimensions due to linear expansion and contraction. The error caused by temperature change will follow the approximate formula: ± 0.04 x (t2 –t,) % of the span.

Frequently Asked Questions - Dial Indicating Pressure Gauges

Q: How do you select a pressure gauge relative to process pressures, normal operating pressures, and maximum pressures in the process? (Dynamic or static process pressures)
A: The pressure range of a gauge should be 10% over the maximum working pressure in static conditions (no pressure fluctuations). In dynamic conditions, the gauge range should be 40% over the maximum working pressure. Ideally, the pressure gauge range should be selected for a midscale reading during normal operating pressures.

Q: What applications require the various lens materials, and to what maximum temperature can each be subjected?
A: Lens materials include Instrument Glass, Laminated Safety Glass, Tempered Glass, and plastic. Glass lenses are used for abrasion, chemical and wear resistant properties. Laminated Safety Glass reduces the possibility of shattering if the Bourdon tube ruptures. Tempered Glass is 2 to 5 times stronger than Instrument Glass. Plastic lenses are used for impact, corrosion and chemical resistance. Special attention should be paid to the temperature and corrosive environments. Polycarbonate is selected for its superior impact resistance, acrylic for its clarity and scratch resistance and Homalite for is superior chemical resistance. In general, gauges with plastic lenses should remain below 140° F.

Q: In what situation would a pigtail syphon be used?
A: Pigtail syphons should be used in steam applications and systems that contain superheated vapor. The pigtail buffers the instrument from the damaging effects high temperature steam by holding system fluid in the coil to provide a steam trap for the fluid to condensate and dissipate the heat.

Q: What is the application for a gauge cleaned for O2 service?
A: Oxygen (O2) cleaning is performed on gauges that are used on oxygen service applications. The cleaning removes all hydrocarbons (oil and grease are common hydrocarbons) that can react violently, resulting in explosions, fire, and injury to personnel and property. Oxygen clean gauges can be used in any application that requires the cleanliness level associated with oxygen clean gauge. Glycerin fill gauge cannot be used on oxygen systems.

Q: What fill fluids options are available, and in what applications would each be used?
A: Glycerin is the most common fill fluid. Because of its unique fluid properties, Glycerin has become the standard for liquid filled gauges (see "What is the purpose of liquid filling a gauge?"). Glycerin's clarity, viscosity, stability, cost, solubility, low toxicity make Glycerin an ideal fluid for many applications. Mineral oils and silicon fluids are used when temperature extremes, chemical compatibility or viscosity fall outside of Glycerin use. Halocarbon® is an inert fluid that is compatible with chlorine, oxygen service, and some high temperature applications. Keep in mind that Glycerin is not compatible with strong oxidizers such as oxygen, chlorine, hydrogen peroxide, or nitric acid. Glycerin & Silicon are explosive in contact with chlorine. Halocarbon® is explosive in contact with Aluminum and magnesium.

Q: What is the difference between the ASME B40.1 and EN 837-1 specification?
A: The American National Standards Institute (ANSI) approves American National Standards which include the American Society of Mechanical Engineers (ASME) standard ASME B40.100. This Standard (B40.100) is confined to analog, dial-type gauges, which, utilizing elastic elements, mechanically sense pressure and indicate it by means of a pointer moving over a graduated scale. The European Committee for Standardization (CEN) is the officially recognized European standards body that develops European Standards (ENs) which include EN 837-1. The EN 837-1 includes mandatory dimensions, metrology, and testing requirement for sale in the European Union. ASME B40.100 includes similar requirements in a mandatory appendix.

Q: What is the purpose of throttle devices such as throttle plugs and screws?
A: Throttle devices limit the flow to the pressure instrument. They are a type of snubber.

Q: What is the purpose of an over and under load stop in a pressure gauge?
A: The tip motion of a Bourdon tube is translated to rotary motion of a pointer by a linkage and sector gear acting on the pointer pinion gear. Stop pins limit the movement of the Bourdon tube, sector or pointer rotation in over and under pressure conditions that would otherwise move the pointer pinion off the sector gear which would damage the gauge.

Frequently Asked Questions - Electronics

Q. What is the difference between a transducer and transmitter?

A. When these terms originated there was a distinctive difference between the two. A transmitter was referred to as an instrument with a current output signal (i.e. 4 mA to 20 mA) and a transducer was referred to as an instrument with a voltage signal (i.e. 3 mV/V, 0 Vdc to 10 Vdc etc.). As time has progressed these terms are now commonly interchanged for reference to current, voltage and digital output signals.

Q. What is the difference between the proof pressure and burst pressure specifications?

A. Proof pressure which is higher than the full scale pressure point is the limit that you can go to without affecting the performance and calibration of the transducer. The burst pressure on the other hand is the limit that you can go before there is pressure chamber rupture and damage. An overload limit specification used sometimes means that proof and burst ratings are identical.

Q. Will the series 1800 Attachable Loop Indicator work with transmitters not made by NOSHOK?

A. The series 1800 indicator will work with any brand that has the same pin connections and style DIN EN 175301-803 Form A connector and sufficient power supply voltage to drive all instruments in the loop. The series 1800 will use 3 Vdc to operate.

Q. What does RFI, EMI and ESD mean related to pressure transducers and transmitter?

A. Radio Frequency Interference and Electromagnetic Interference refer to the effects electrical noise can have on instruments. RFI frequently comes from hand held walkie-talkies and EMI comes from AC motors in the vicinity of the instrument. ESD (Electrostatic Discharge) comes from many sources including the application itself. CE compliant transmitters and transducers incorporate protection techniques and components to minimize most of the interference.

Q. Can traditional diaphragm seals or gauge protectors be used with pressure transducers and transmitters?

A. Most diaphragm seals can be used with pressure transducers and transmitters. The real key is to assemble and fill the seal properly, being careful not to entrap air in the fill fluid.

Q. Are pigtail steam syphons used in transmitter applications?

A. The steam syphon is necessary in steam pressure applications. It is important to isolate the transmitter sensing diaphragm from the high temperature encountered with steam pressure applications.

Q. Can orifices and snubbers be used and why would they be needed?

A. As with other pressure measurement instruments including gauges, pressure pulsations and spikes, are issues with pressure transmitters. Whenever the pressure of an incompressible fluid is measured, there is the potential for pulsations and spikes, which can damage pressure transmitters. An orifice installed in the pressure connection by NOSHOK can protect the transmitter from damage. Where there is the possibility of clogging the small orifice, an attachable piston snubber is recommended.

Q. What is the reason for the vent tube in the cable of the 612 and 627 Series submersible level transmitters?

A. All pressure measurements are inherently differential in theory. Gauge pressure is referenced to ambient atmospheric, absolute pressure is referenced to vacuum contained in an evacuated chamber within the transmitter. The level measurement is also a differential measurement, with its reference to ambient atmospheric pressure. In order for the submersible level measurement to be referenced to atmospheric, the cable contains a vent tube which runs the complete length of the cable and “vents” into the atmospheric pressure at the junction box connection which is out of the liquid.

Q. How does the series 612 and 627 submersible level transmitter measure level?

A. The transmitter measures the hydrostatic pressure produced by the liquid level higher than the point where the instrument is located. The higher the liquid, the higher the pressure.

Q. NOSHOK transducers and transmitters are normally 2 wire or 3 wire in output configuration. Is a 4 wire transducer available?

A. Voltage output transducers are available with a 4th connection which is electrically the same as the power supply common to connect to wiring configurations that require it.

Canadian Registration Numbers

CRN documents are available at www.noshok.com.

Category:	F. Measuring Devices
Type of Fitting:	**Including pressure gauges, level gauges, sight glasses, level or pressure transmitters**
Alberta	0F15217.52
British Columbia	0F15217.51
Manitoba	0F15217.54
New Brunswick	0F15217.57
Newfoundland & Labrador	0F15217.50
Northwest Territories	0F15217.5T
Nova Scotia	0F15217.58
Nunavut	0F15217.5N
Ontario	0F15217.5
Prince Edward Island	0F15217.59
Quebec	CSA-0F15217.56
Saskatchewan	CSA-0F15217.56
Yukon Territory	0F15217.5Y

NOTES

NOTES

NOTES

QUALITY POLICY

NOSHOK is committed to providing a high degree of value and continually improving processes to enhance customer satisfaction by focusing on requirements for pressure, temperature, and level measurement instrumentation and related products.

TO DOWNLOAD OR ORDER CATALOGS,
VISIT WWW.NOSHOK.COM

All from world class technology.

Combined with real-world stamina.

The highest value with the industry's best warranty.

And all from a company with a 50+ year record of customer satisfaction.

All from your Single Source Instrumentation Company.

NOSHOK

Adaptive Industrial Solutions
sales@adaptiveind.com
(877) 818-5009

Web: www.noshok.com

ISO 9001:2015
REGISTERED