Model UFTS Tube-N-Tube Armored Flow Indicators (patented)

FEP Teflon® Lined (patented)

- Approved by the Factory Mutual System (150° F max)
  (Max length for FM approved models per specifications below)
- Available in any length up to 72 inches
- Stock lengths are 8 and 12 inches
- Unobstructed visibility
- Patented one-piece SuperSeal inserts are self-sealing
- Wetted part is one-piece FEP Teflon®, flared over SuperSeal insert
- Available with sanitary fittings
- Reducing flanges and threaded end connections are available
- Designed for cryogenic and hot process applications
- Excellent for corrosive, viscous, or sanitary service
- Design is triple sealed and insulated
- Sight tube sleeve can be calibrated directly
- Custom designs available; consult factory
- Optional 304 or 316 SS construction
- ANSI Class 300 lb flanges available

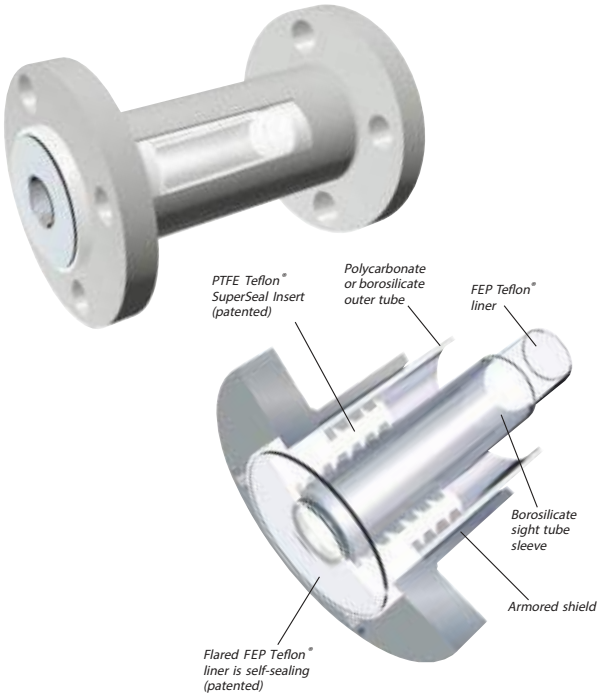

Standard Construction

- FEP Teflon® inner sight tube, one piece
- PTFE Teflon® SuperSeal inserts
- Borosilicate sight tube sleeve, standard or heavywall
- Polycarbonate or borosilicate outer sight tube
- Carbon steel shield and flanges, epoxy coated
- ANSI Class 150 lb flanges

Model UFTS Specifications

Indicator size, in.	Sight tube material	Outer tube size, in.	Outer tube material	Sleeve tube size, in.	Sleeve tubing	Indicator rating, psig	Flange size, in. ANSI 150	Max Length FM Approved in.
1.00	FP	2.25	LX	1.00	PI	150	1.50	48
1.00	FP	2.75	LX	1.00	PI	150	2.00	48
1.00	FP	2.75	OG	1.00	PI	150	2.00	48
1.25	FP	2.75	LX	1.50	HW	285 (1)	2.00	60
1.25	FP	2.75	OG	1.50	HW	285 (1)	2.00	60
1.50	FP	2.75	LX	1.50	PI	135	2.00	48
1.50	FP	2.75	OG	1.50	PI	135	2.00	48
1.65	FP	4.00	LX	2.00	HW	285 (1)	3.00	60
1.65	FP	4.00	OG	2.00	HW	285 (1)	3.00	60
2.00	FP	4.00	LX	2.00	PI	115	3.00	48
2.00	FP	4.00	OG	2.00	PI	115	3.00	48
2.75	FP	5.00	AC	3.00	HW	200	4.00	48
2.75	FP	5.00	OG	3.00	HW	200	4.00	48
3.00	FP	5.00	AC	3.00	PI	95	4.00	48
3.00	FP	5.00	OG	3.00	PI	95	4.00	48
4.00	FP	7.00	AC	4.00	HW	100	6.00	12
4.00	FP	7.00	OG	4.00	HW	100	6.00	12
4.00	FP	7.00	AC	4.00	PI	85	6.00	48
4.00	FP	7.00	OG	4.00	PI	85	6.00	48
6.00	FP	9.00	AC	6.00	PI	60	8.00	48
6.00	FP	9.00	OG	6.00	PI	60	8.00	48
8.00	FP	10.00	AC	8.00	PI	40	10.00	48
8.00	FP	10.00	OG	8.00	PI	40	10.00	48

FP = FEP Teflon® PI = Standard Borosilicate HW = Heavywall Borosilicate LX = Outer Polycarbonate
OG = Outer Borosilicate AC = Outer Acrylic Note: (1) Actual flange pressure rating may be less based on material selected.

Adaptive Industrial Solutions
sales@adaptiveind.com | (877) 818-5009