Taylor Valve Technology®

MALLARD CONTROL

A BRAND OF Taylor Valve Technology®

TRUSTED SINCE 1958 WORLDWIDE

Level Instrumentation

Precise.

Quality.

Reliable.

SINCE 1958

Mallard Control Model 3100E & 3100P/P1 Liquid Level Switches

Specifications

Model 3100E

Process connection: 2" MNPT

Maximum operating pressure
- Stainless steel float - 500 psig
- Polystyrene float - 2000 psig

Minimum operating specific gravity
- 316 stainless steel float: 0.68
- Polystyrene float: 0.50

Leadwires: 18 AWG x 36" long

Model 3100P/P1

Process connection: 2" MNPT

Maximum operating pressure
- Stainless steel float - 500 psig
- Polystyrene float - 2000 psig

Supply pressure connection
- 1/8" FNPT

Exhaust connection: 1/4" FNPT

Supply pressure: 30 to 60 psig

Minimum operating specific gravity
- 316 stainless steel float: 0.68
- Polystyrene float: 0.50

The model 3100E is an electric, float-operated switch which can be used as a high or low level alarm or for liquid level control.

The 3100E is rated for high pressure applications, and the polystyrene float will effectively and consistently operate the switch at specific gravities as low as 0.50. The switch can be mounted directly onto the vessel nozzle or into an external float chamber.

Model 3100E Electric Level Switch

The model 3100P and 3100P1 are pneumatic, float-operated switches for liquid level control. The 3100P is a 2-way normally-open or normally-closed switch and the 3100P1 is a 3-way block-and-bleed switch. The 3100P and 3100P1 are rated for high pressure applications, and the polystyrene float will effectively and consistently operate the switch at specific gravities as low as 0.50. Both models can be mounted directly onto the vessel nozzle or into an external float chamber.

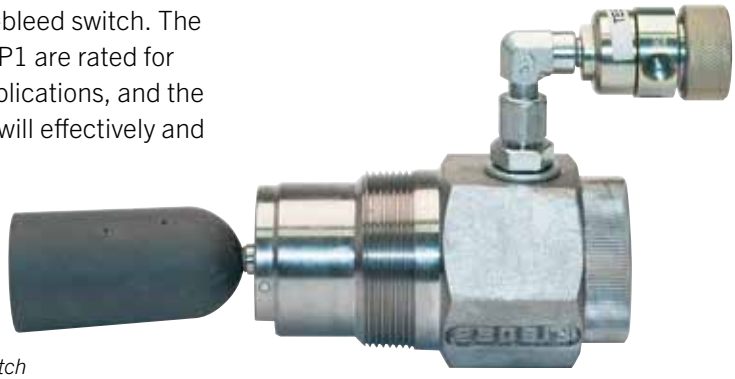

Model 3100P/P1 Pneumatic Level Switch

Table of Contents

Model 3100E & 3100P/P1 Liquid Level Switches 2-3
Model 3200/3201 Liquid Level Controllers. 4-9
Model 3500/3510 Gauge Valves 10
Model 3520 Liquid Level Gauges 11-13

Mallard Control Model 3100E & 3100P/P1 Liquid Level Switches

Dimensional Data (in.)

Model 3100E

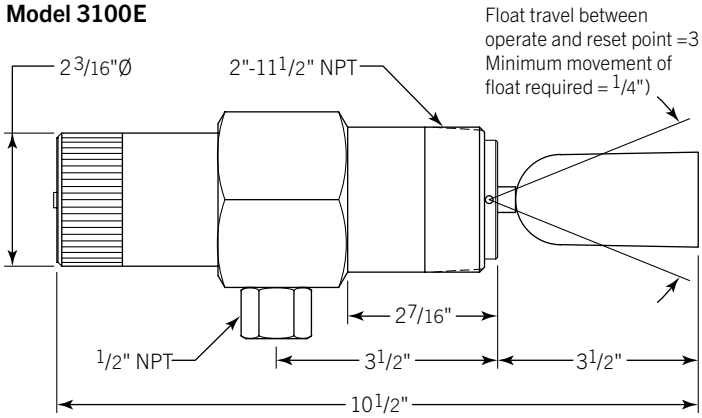

External Float Chamber - P/N 31124-2

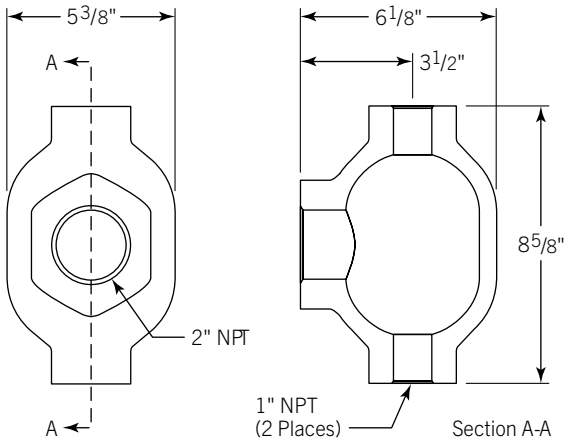

Model 3100P/P1

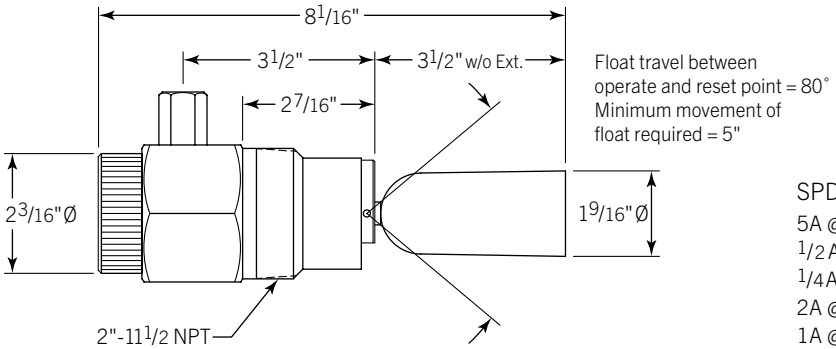

SPDT Switch Rating	DPDT Switch Rating
5A @ 125-250-480 VAC	10A @ 125-250 VAC
1/2 A @ 125 VDC	1/2 A @ 125 VDC
1/4 A @ 250 VDC	1/4 A @ 250 VDC
2A @ 6-30 VDC Resistive	10A @ 6-24 VDC
1A @ 6-30 VDC Inductive	Inductive/Resistive

Part Number Codes, Model 3100E

Part Number	Model Number	Body	Float (Viton® Seals)	Switch
91200	3100E	CS	Polystyrene	SPDT
91201	3100E2	CS	Polystyrene	DPDT
91210	3100E2	CS	SS	DPDT
91219	3100E	CS	SS	SPDT
91224	3100E2-SS	SS	SS	DPDT
91225	3100E-SS	SS	SS	SPDT
91227	3100E-SS	SS	Polystyrene	SPDT
91232	3100E2-SS	SS	Polystyrene	DPDT

Part Number Codes, Model 3100 P/P1

Part Number	Model Number	Body	Float (Viton® Seals)	Pilot
91000	3100P	CS	Polystyrene	No
91001	3100P1	CS	SS, 1" Ext.	Yes
91002	3100P	CS	SS	No
91004	3100P1	CS	SS	Yes
91006	3100P1	CS	Polystyrene	Yes
91008	3100P-SS	SS	Polystyrene	No
91025	3100P1-SS	SS	Polystyrene	Yes
91026	3100P1-SS	SS	SS	Yes
91027	3100P1-SS	SS	SS	No
91206	3100P1	CS	Poly., 1" Ext.	Yes
91207	3100P	CS	Poly.,1" Ext.	No

Materials of Construction

Description	Material
Body	WCC 316 Stainless Steel (Optional)
Float	Polystyrene 316 Stainless Steel (Optional)
Seals	Viton®

Temperature Limits

Model 3100E & 3100P/P1	
Polystyrene Float	Stainless Steel Float
-20 to 300°F (-29 to 200°C)	-20 to 400°F (-29 to 204°C)

Mallard Control Model 3200/3201 Liquid Level Controllers

Features

- Pneumatic snap-ECO Pilot and throttling pilot: Pneumatic model 3200/3201 can be fitted with either of these pneumatic pilots. A Snap-ECO pilot for environmentally friendly, non-bleed, and on/off applications or a throttle pilot for modulating service. The controller can be quickly and easily converted from one pilot style to the another.
- Electric pilots: The model 3200 is also available with explosion proof SPDT or DPDT electric switches.
- Weather-proof case: Utilizes a gasket between its cover and case to seal out the effects of outside weathering.
- Liquid-liquid interface control: The model 3200/3201 is well suited for liquid-liquid interface detection.
- Field reversible action: The model 3200/3201 design makes reversing the controller action simple. Requires no additional parts or special tools.
- Displacers: Mallard offers variety of displacer materials and designs for the model 3200/3201 to satisfy your design and application requirements. Standard material offerings are PVC, acrylic and 316 stainless steel.
- Available with wetted materials that meet NACE MR0175 specifications for sour service.

The model 3200/3201 liquid level controller is ideal for oilfield scrubber and separator applications. Its rugged and versatile design make it the preferred choice of production operators for reliable service in a wide variety of applications.

Model 3200 is available in pneumatic snap and throttling pilots, or electric SPDT and DPDT limit switches; direct or reverse action; with a variety of displacer sizes, materials, and vessel connections.

Specifications

Available end connection sizes
- Threaded: 2"

Pilot
- Pneumatic (standard)
  - Snap (on/off), 0-20/0-30 psig output
- Throttle (modulating), 3-15/6-30 psig output
- Electric (optional)
  - SPDT (explosion proof)
  - DPDT (explosion proof)

Supply pressure requirement
- 3-15 or 0-20 psig output
  - 20-30 psig min.
- 6-30 or 0-30 psig output
  - 35-40 psig min.

Electric switch rating
- SPDT: 15 amps @ 125, 250 or 480 VAC
- DPDT: 10 amps @ 125, 250 or 480 VAC

Supply & output connections
- Pneumatic pilots: 1/4" FNPT
- Electric switches: 1/2" FNPT

Pressure ratings
- 2" threaded: 6000 psig

Materials of Construction

Description	Material
Body	Carbon Steel
Case & Cover	Die Cast Aluminum
Pilots	Aluminum w/SS Internals
Pilot Gaskets / Diaphragm	Buna Viton® (Optional)
Gauges	Brass or Brass LF 316SS or 316SS LF (Optional)
Shaft	303 Stainless Steel 316 SS (Optional)
Bearing Blocks	303 Stainless Steel 316 SS (Optional)

Description	Material
Bearings	440C Stainless Steel
Seals	Buna-N Viton® (Optional)
Displacer	PVC Acrylic or 316SS (Optional)
Displacer Arm	304 Stainless Steel
Vertical Hanger (Swivel)	316 Stainless Steel
Vertical Displacer Ext. Chain	302 Stainless Steel

NOTE: Taylor Valve reserves the right to change product designs and specifications without notice.

Mallard Control Model 3200/3201 Part Number Codes

Controller Case
00 • Sealed Case
01 • Standard Case

Arm Length
– • 15" (Std.)
B • 7"
C • 7.19"
D • 7.25"
E • 7.75"
F • 8"
G • 8.5
H • 9"
I • 9.25"
J • 9.5"
K • 10"
L • 11"
M • 12"
N • 12.5"
O • 14"
P • 16"
Q • 16.44"
R • 16.75"
S • 17"
T • 18"
U • 20"
V • 21"
W • 22"
Y • 24" (40MU Std.)
Z • 25"

End Connection
20 • 2"

End Connection Type
MS • Threaded MNPT

End Connection Rating
0 • MNPT

Materials of Construction: Body / Shaft & Bearing Block
– • A350 LF2 / 303SS
A • A350 LF2 / 316SS
N • A350 LF2 / 316SS, NACE
S • 316SS / 316SS, NACE

Pilot
S • Snap/ECO Pilot)Non-Bleed Snap)
T • Throttling (Pneumatic Modulating)
E • SPDT, Single Pole Double Throw (Electric On/Off, Exp. Proof Housing)
D • DPDT, Double Pole Double Throw (Elec. On/Off, Exp. Proof Housing)

Mounting / Controller Action
LD • Left Hand / Direct
LR • Left Hand / Reverse
RD • Right Hand / Direct
RR • Right Hand / Reverse

Seal Material
B • Buna
A • Aflas®
V • Viton®
C • Low Temp Viton®
L • Low Temp Buna

Displacer: Dimensions (in.) / Material
– • 1.88 x 12 / PVC
B • 1.5 x 10 / PVC
C • 1.5 x 12 / Acrylic
D • 1.5 x 12 / PVC
E • 1.5 x 24 / Acrylic
F • 1.5 x 6 / PVC
H • 1.88 x 10 / Acrylic
I • 1.88 x 10 / PVC
J • 1.88 x 12 / Acrylic
K • 1.88 x 14 / Acrylic
L • 1.88 x 14 / PVC
M • 1.88 x 18 / PVC
P • 1.88 x 6 / PVC
R • 2.00 x 12 / Acrylic
S • 2.00 x 12 / PVC
T • 2.00 x 14 / Acrylic
U • 2.00 x 14 / PVC
V • 2.75 x 12 / PVC
W • 2.75 x 5 / Acrylic
Y • 2.75 x 5 / PVC
Z • 3.00 x 10 / PVC
0 • 1.66 x 12 / 316SS
1 • 1.66 x 10 / 316SS
2 • 1.66 x 6 / 316SS
4 • 1.66 x 10 / 316SS, NACE
5 • 1.66 x 12 / 316SS, NACE
6 • 1.66 x 14 / 316SS
7 • 1.66 x 18 / 316SS
8 • 1.66 x 24 / 316SS
9 • 1.66 x 30 / 316SS

Gauge Type: Pressure Range / Internal Material
S • 0-30 psi / Brass (Standard)
T • 0-60 psi / Brass (Standard)
3 • 0-30 psi / 316SS
6 • 0-60 psi / 316SS
A • 0-30 psi / Brass, Liquid -Filled
B • 0-60 psi / Brass, Liquid -Filled
C • 0-30 psi / 316SS, Liqui d-Filled
D • 0-60 psi / 316SS, Liqui d-Filled
E • Electric (**E & D Pilot Options Only**)

Enclosure
A • Std. Case (3201)
S • Std. Case (3200)

3201-20 MS0 - S RDB - SA
Example

NOTE: Taylor Valve reserves the right to change product designs and specifications without notice.

Mallard Control Model 3200/3201 Liquid Level Controllers

Operating Temperature Limits

Body Material	Seals	Displacer Material	Temperature Limits °F	Temperature Limits °C
Carbon Steel	Buna	PVC	-40 to 140	-40 to 60
		Acrylic	-40 to 180	-40 to 82
		316SS	-40 to 225	-40 to 107
	Viton®	PVC	-20 to 140	-29 to 60
		Acrylic	-20 to 200	-29 to 93
		316SS	-20 to 400	-29 to 204

Displacer Pressure Ratings

Displacer Material	Maximum Pressure (psig)
PVC	6170
Acrylic	6170
316 Stainless Steel	2000 at 180˚F (82˚C) 1595 at 400˚F (204˚C)*

*For applications requiring higher pressure ratings for SS displacers, consult factory or your local Mallard representative.

Minimum Allowable Fluid Specific Gravity

Pilot	Top Level Control		Liquid-Liquid Interface Level Control			
	Horizontal Displacer	Vertical Displacer	Horizontal Displacer		Vertical Displacer	
	Standard[1]	Standard[2]	Standard[1]	Special[3]	Standard[2]	Special[3]
Snap	0.28	0.21	0.28	0.030	0.21	0.050
Throttle	0.56	0.42	0.56	0.060	0.42	0.100

1. Based on 1.88" dia. x 12" displacer with 12" displacer arm.
2. Based on 1.88" dia. x 12" displacer with 15" displacer arm.
3. Special displacer and displacer arm configurations required. Consult factory or your local Mallard representative.

Theory of Operation

The operation of the model 3200 Level controller is based upon the "force balance principle". The weight of a displacer-type level sensing element produces a force which is applied to one side of the torque bar through a series of shafts and levers. This force is balanced by the opposing force of a compressed spring on the other side of the torque bar. As the level rises, the increased immersion of the displacer in the liquid causes the relative weight of the displacer to decrease, due to the buoyancy force being produced. This, in turn, results in a decrease in force applied to the torque bar. The torque bar then rotates until the forces are again balanced. Torque bar rotation is detected by the pilot through a fulcrum mounted on a lever (flapper bar) to affect the desired controller output. The output signal can be a pneumatic on/off signal by using the snap pilot, a pneumatic modulating signal by using the throttle pilot, or it can be an electrical SPDT or DPDT output signal by using an electric limit switch.

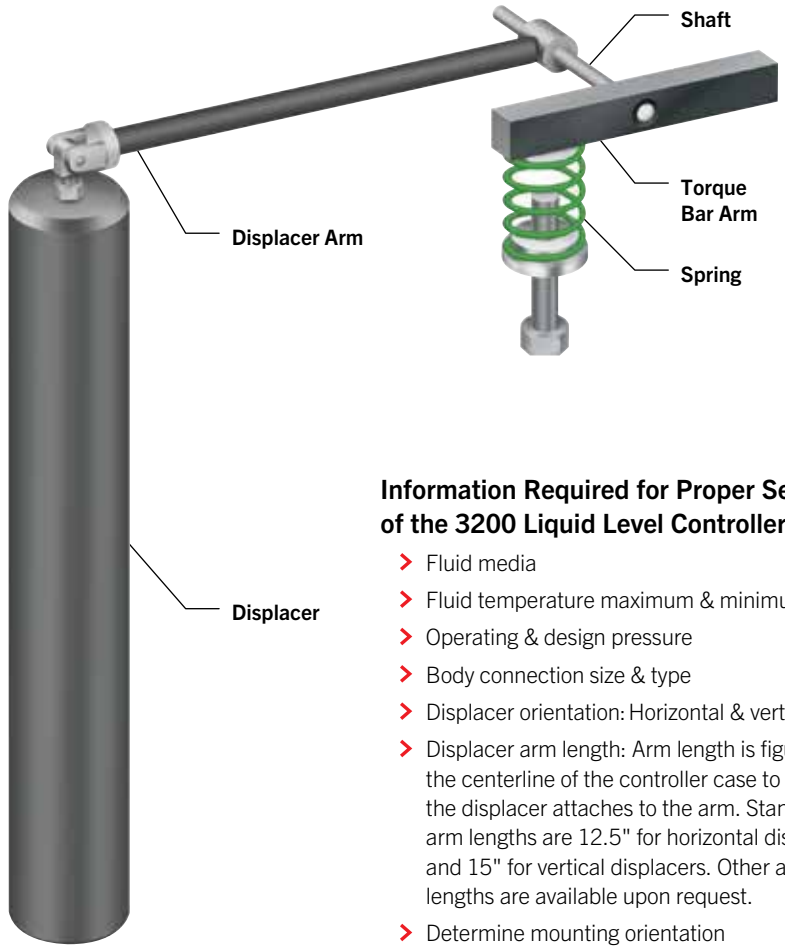

Information Required for Proper Selection of the 3200 Liquid Level Controller

- Fluid media
- Fluid temperature maximum & minimum
- Operating & design pressure
- Body connection size & type
- Displacer orientation: Horizontal & vertical
- Displacer arm length: Arm length is figured from the centerline of the controller case to where the displacer attaches to the arm. Standard arm lengths are 12.5" for horizontal displacers and 15" for vertical displacers. Other arm lengths are available upon request.
- Determine mounting orientation

NOTE: Taylor Valve reserves the right to change product designs and specifications without notice.

Mallard Control Model 3200/3201 Action & Mounting

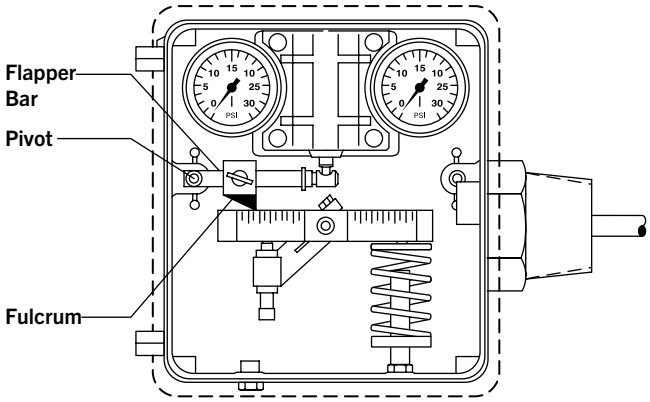

Left-Hand Mount Reverse Acting

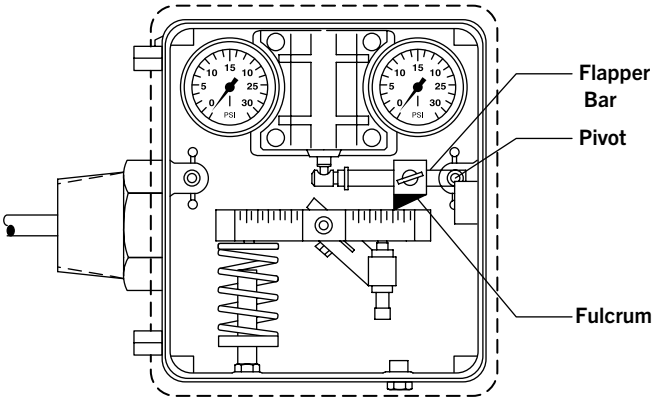

Right-Hand Mount Reverse Acting

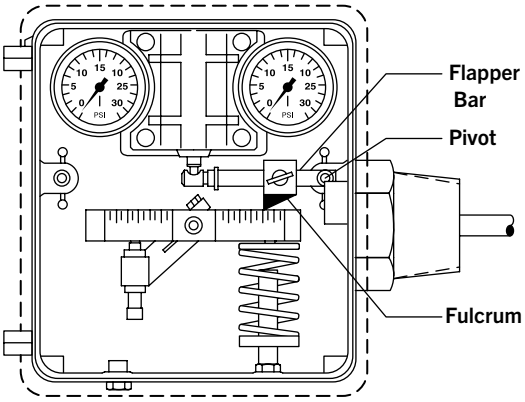

Left-Hand Mount Direct Acting

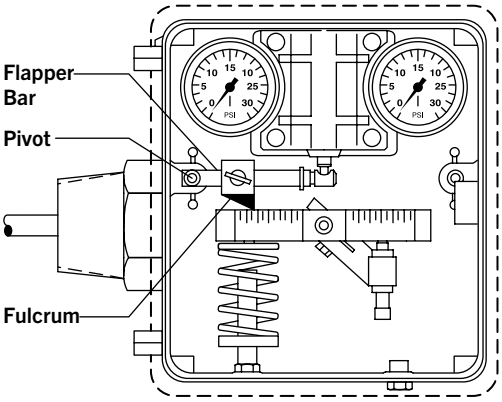

Right-Hand Mount Direct Acting

Proportional Band

Proportional band is the ratio of used displacer length versus the total length of the displacer to achieve a desired output signal. Example: If 6 inches of liquid level change will develop the required output signal (such as 3-15 psi) and a long vertical displacer is used, then the level controller is said to have a 50% proportional band over 12”. Sliding the fulcrum on the flapper bar away from the pivot pin toward the snap ring decreases proportional band (increases sensitivity), while sliding the fulcrum on the flapper bar away from the snap ring toward the pivot pin increases proportional band (decreases sensitivity). A desired output signal (such as 3-15 psi or 6-30 psi) may be accomplished over any portion of the displacer by adjusting the fulcrum as described above.

Controller Action

Controller action is determined by the installation of the flapper bar, as shown above. Control is considered "Direct-Acting" when the controller output changes in the same direction as the liquid level. For example, the controller output signal will increase when the liquid level the controller is sensing increases, and vice versa. Control is considered “reverse acting” when the controller output changes in the opposite direction as the liquid level. For a direct acting controller, the flapper bar pivot point is on the same side as the spring. For a reverse acting controller, the flapper bar pivot point is on the opposite side as the spring.

Mounting

The model 3200 liquid level controller can be set up as right-hand or left-hand mount. The orientation of the level controller mounted to the vessel, while facing the front of the controller, determines the mounting style. If the controller is to be mounted on the right side of the vessel, then it is considered “right-hand”. If the controller is to be mounted on the left side of the vessel, then it is considered “left-hand”. The mounting orientation can be easily reversed in the field.

NOTE: Taylor Valve reserves the right to change product designs and specifications without notice.

Mallard Control Model 3200/3201 Pilot Operation

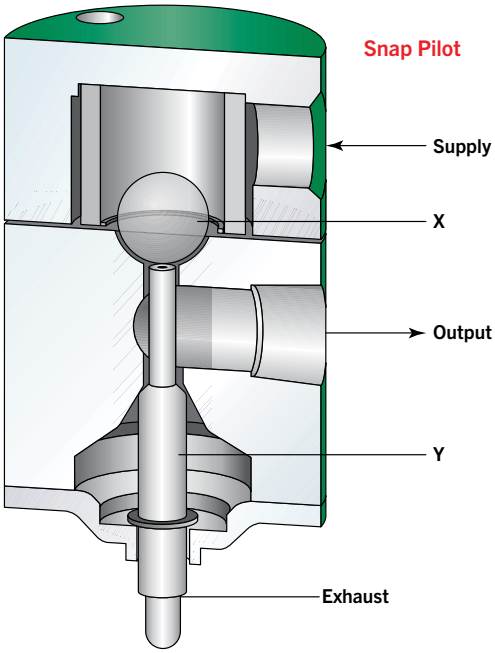

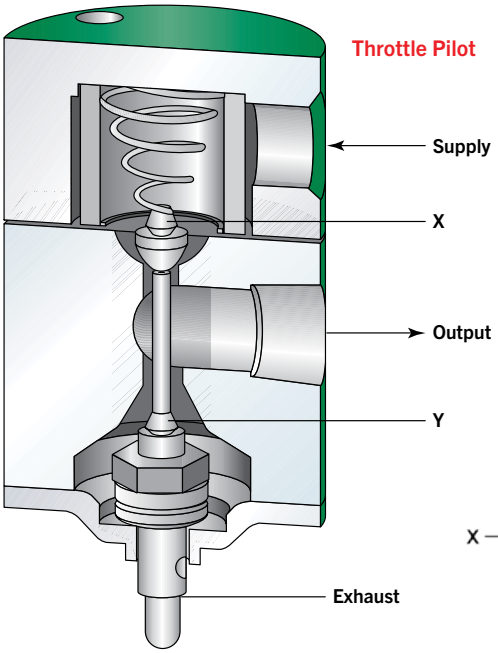

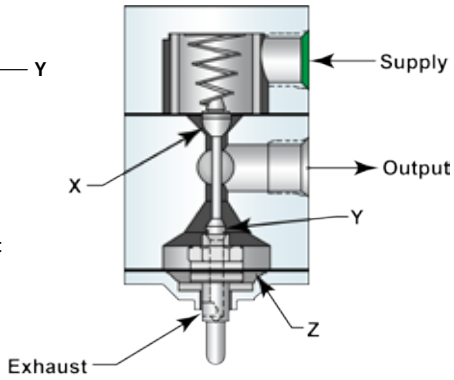

Snap Pilot Operation

The snap pilot is made up of two valves. One to admit system supply pressure and one to exhaust system pressure. Ball "X" controls the flow of supply gas into the pilot and is held closed on the pilot seat by force exerted by the supply pressure acting upon the seating area of the ball.

When force transmitted from the flapper bar to the thrust pin "Y" becomes sufficient to overcome the force holding ball "X" seated, ball "X" snaps off the pilot seat allowing supply gas to flow past ball "X" and through the output port of the pilot. The spherical seating end of the thrust pin "Y" seats and closes the exhaust port simultaneously when ball "X" snaps open. The seating area of the thrust pin is smaller than the seating area of ball "X"; therefore, the thrust pin must remain seated against the supply pressure until force on the thrust pin from the flapper bar diminishes.

A simultaneous action occurs as force from the flapper bar on the thrust pin "Y" is removed. When this happens, the supply pressure will unseat the thrust pin and open the exhaust port in the pilot and ball "X" will reseat and close off the supply port. The difference in seating areas gives this pilot its "snap" action.

The Mallard ECO Pilot is an easy and affordable solution to convert your existing level controllers to a more efficient non-bleed design. By reducing fugitive emissions into the atmosphere, oil & gas operators regain lost profits while lowering their carbon footprint.

Throttle Pilot Operation

The throttle pilot, like the snap pilot, is also made up of two internal valves. In addition, the throttle pilot utilizes a resilient diaphragm "Z" in conjunction with the valves to create a force balance pilot.

The pilot output supply pressure acts upon the diaphragm "Z" so that the diaphragm pushes back with the same force being applied to the thrust pin by the flapper bar, thus the term force balance.

The throttle pilot functions in a similar manner as the snap pilot except that the output pressure is proportional to the amount of force applied to the lower seat by the flapper bar. An increase in force on the thrust pin produces a proportionate increase in pilot output pressure.

As forces change on the thrust pin, the pilot seeks a new balance point by exhausting the supply output at valve "Y" or unseating valve "X" to increase output pressure. Supply gas does not flow while the pilot is in balance.

NOTE: Taylor Valve reserves the right to change product designs and specifications without notice.

Mallard Control Model 3200/3201 Dimensional Data

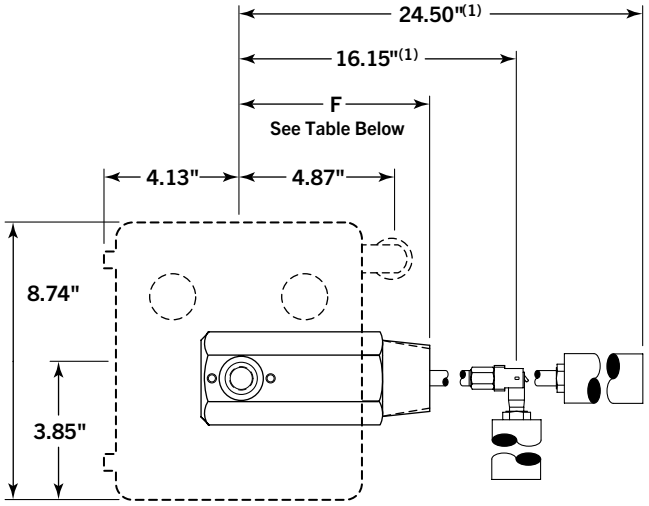

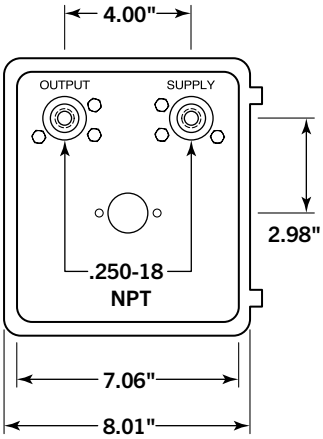

Model 3200 Back View

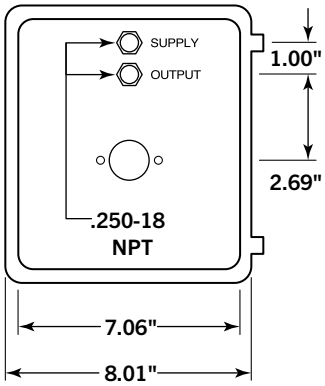

Model 3201 Back View

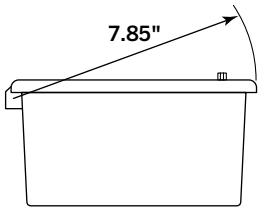

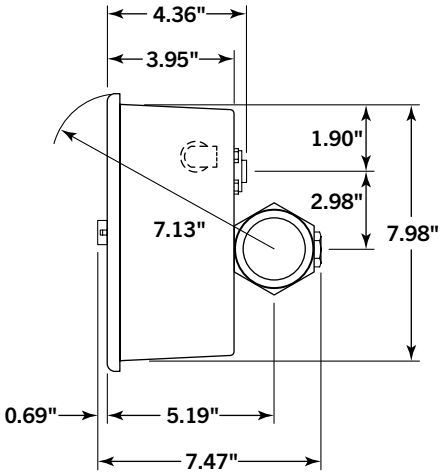

Model 3200

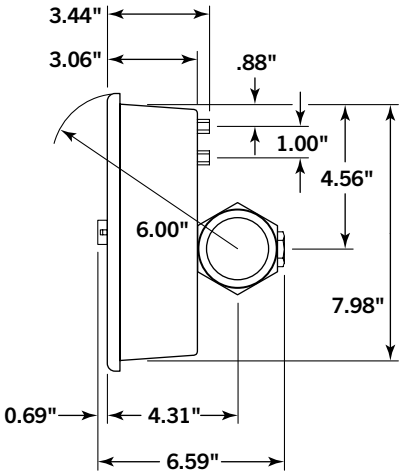

Model 3201

(1)16.15" dimension based on standard vertical service configuration of arm with a 12" long displacer. 24.50" dimension based on standard horizontal service configuration of 12.50" arm with a 12" long displacer. Other arm lengths and displacer sizes are available on request.

Dimension F Data (in., mm)

Vessel Connection	Size (in., mm) / Dimension F								
	2.00		3.00		4.00		6.00		8.00
	in.	mm	in.	mm	in.	mm	in.	mm	in. / mm
Screwed Male NPT	6.00	152.4	—	—	—	—	—	—	—

NOTE: Taylor Valve reserves the right to change product designs and specifications without notice.

Mallard Control Model 3500/3510 Gauge Valves

Features

- Safety shutoff: Equipped with a stainless steel ball check located upstream of the seat, which instantaneously shuts off flow of medium in case of gauge glass breakage.
- Union gauge connection: Allows top and bottom connected gauges to be rotated to any angle for convenient visibility. Enables gauge removal without removing the gauge valves, a significant time saver.
- Offset pattern: Gauge and drain connections are offset 0.75" from the vessel connection centerline, enabling the glass liquid level gauge to be cleaned in place.
- Materials of construction which comply with NACE MR0175 specifications are available on request.

Specifications

Gauge connections
1/2" or 3/4" FNPT, rigid or union

Vessel connection
1/2" or 3/4" MNPT, union only

Seating service
Integral to valve body

Approximate weight
5.5 lbs. (2.49 kg)

Maximum operating pressure
4000 psi

The model 3500 (rigid-union) and model 3510 (union-union) gauge valves are recommended for use with model 3520 glass liquid level gauges.

They are compatible with all armored flat-glass liquid level gauges. Consistent with Mallard's reputation, the model 3500 is designed and built to the highest standards.

Model 3500
Rigid-Union Gauge Valve

Model 3510
Rigid-Union Gauge Valve

Materials of Construction

Description	Material
Body	Low Temperature Carbon Steel
Stem	416 SS (Standard) 316 SS (NACE Option)
Ball Check	302 Stainless Steel
Handwheel	Cast Iron

Vent & Drain Connections

Gauge Connection (in.)	Vent / Drain Connection (in.)	
	Model 3500	Model 3510
1/2 NPT	1/2 NPT	1/2 NPT
3/4 NPT	3/4 NPT	3/4 NPT

Part Number Codes

Gauge-Vessel Connection Style
00 • Rigid-Union **10** • Union-Union

Connection Size
Gauge Connection / Vessel Connection
1 • 1/2" FNPT / 1/2" MNPT
2 • 1/2" FNPT / 3/4" MNPT
3 • 3/4" FNPT / 1/2" MNPT
4 • 3/4" FNPT / 3/4" MNPT

Materials of Construction
N • Carbon Steel, NACE MR0175

Note: Sold in two-piece sets.

3500 - 2
Example

NOTE: Taylor Valve reserves the right to change product designs and specifications without notice.

Mallard Control Model 3520 Liquid Level Gauge

The model 3520 glass liquid level gauge is a rugged flat glass gauge. Standard construction includes a solid one-piece chamber, steel covers, alloy steel bolts and nuts, and tempered glass.

Model 3520 Reflex Liquid Level Gauge

Model 3520 Transparent Liquid Level Gauge

Materials of Construction

Description	Material
Liquid Chamber Cover	Carbon Steel (Standard) Carbon Steel
Bolts & Nuts	Steel, Treated to Prevent Rust (Std.) 316 SS (Marine Option)
Glass	Tempered Borosilicate to 800 °F (427 °C)
Gaskets	Bonded Compressed Fibers or Glass Filled PTFE

Features

- Quality materials: Tempered borosilicate glass conforms to BS3463, JIS B8211, Din 7080, and DIN 7081. All parts are ASTM grade and listed in ANSI 31.3.
- Quality assurance testing: All gauges are hydrostatically tested to 1.5 times the rated pressure at 100°F (38°C).
- No-leak design: Recessed gasket seat in chamber and cover prevents leaks often caused by shifting gaskets.
- Liquid-gas or liquid-liquid interface applications: Available in either reflex or transparent styles to satisfy all application requirements.
- Wetted parts conform to NACE MR0175 specifications

Specifications

Connections
1/2" Top-bottom (standard)
3/4" Top-bottom (optional)

Gauge length
Gauge sections are available in nine standard glass sizes. For longer size requirements, units are constructed with multiple vision slots in a continuous solid bar chamber.

Pressure Temperature Ratings

Temp. (°F)	Maximum Pressure (psi) / Saturated Steam Rating 300 WSP									Maximum Pressure (psi) / Saturated Steam Using Mica 750 WSP								
	Reflex Gauge Glass Size (in)									Transparent Gauge Glass Size (in)								
	1	2	3	4	5	6	7	8	9	1	2	3	4	5	6	7	8	9
100	3270	3140	3000	2880	2750	2630	2510	2390	2250	2000	1850	1750	1600	1500	1350	1250	1100	1000
200	3090	2970	2860	2740	2620	2500	2380	2260	2150	1900	1780	1660	1550	1440	1300	1175	1060	950
300	2900	2790	2670	2560	2450	2340	2220	2110	2000	1770	1660	1550	1450	1330	1220	1100	1000	900
400	2700	2600	2490	2380	2270	2170	2060	1950	1850	1675	1575	1470	1350	1250	1150	1050	925	850
500	2510	2410	2305	2205	2100	2000	1900	1800	1700	1530	1450	1350	1250	1150	1050	950	850	750
600	2285	2190	2100	2010	1915	1820	1730	1640	1550	1350	1275	1180	1100	1010	925	850	750	675

NOTE: Taylor Valve reserves the right to change product designs and specifications without notice.

Mallard Control Model 3520 Liquid Level Gauge

Part Number Codes

Length Code
See Chart on Page 13

Style
R • Reflex
T • Transparent

Connections
Sight Glass / Gauge Valve - Vessel
B1 • 1/2" Sight Glass / Gauge Valve - 1/2" Vessel
B2 • 3/4" Sight Glass / Gauge Valve - 1/2" Vessel
B3 • 1/2" Sight Glass / Gauge Valve - 3/4" Vessel
B4 • 3/4" Sight Glass / Gauge Valve - 3/4" Vessel

Mounting
0 • None, Use Connections B1 or B2 Only
1 • Style 1, Rigid-Union (3500 Gauge Valve Included)
2 • Style 2, Union-Union (3510 Gauge Valve Included)

Coating / Service Option
S • Standard/NACE MRO0175

Center to Center Dimensions (For Mounting Use only)
Enter Length • 14.50 = 1450 (Omit Decimals)
Blank • No Mounting

3520-15 R B1 0-S-
Example

Notes

Mallard Control Model 3520 Liquid Level Gauge

Length Code & Center to Center Dimensional Data (in., mm)

Length Code	No. of Sections	Length				Center to Center			
		Visible		Overall		3500		3510	
		in.	mm	in.	mm	in.	mm	in.	mm
11	1	3.75	95.25	5.25	133.4	8.13	206.5	11.38	289.1
12		4.75	120.7	6.25	158.8	9.13	231.9	12.38	314.5
13		5.75	146.1	7.25	184.2	10.13	257.3	13.38	339.9
14		6.75	171.5	8.25	209.6	11.13	282.7	14.38	365.3
15		7.88	200.2	9.38	238.3	12.25	311.2	15.50	393.7
16		9.13	231.9	10.63	270.0	13.50	342.9	16.75	425.5
17		10.25	260.4	11.75	298.5	14.63	371.6	17.88	454.2
18		11.88	301.8	13.38	339.9	16.25	412.8	19.50	495.3
19		12.63	320.8	14.13	358.9	17.00	431.8	20.25	514.4
23	2	13.00	330.2	14.50	368.3	17.38	441.5	20.63	524.0
24		15.00	381.0	16.50	419.1	19.38	492.3	22.63	574.8
25		17.25	438.2	18.75	476.3	21.63	549.4	24.88	632.0
26		19.75	501.7	21.25	539.8	24.13	612.9	27.38	695.5
27		22.00	558.8	23. 50	596.9	26.38	670.1	29.63	752.6
28		25.25	641.4	26.75	679.5	29.63	752.6	32.88	835.2
29		26.75	679.5	28.25	717.6	31.13	790.7	34.38	873.3
36	3	30.38	771.7	31.88	809.8	34.75	882.7	38.00	965.2
37		33.75	857.3	35.25	895.4	38.13	968.5	41.38	1051
38		38.63	981.2	40.13	1019	43.00	1092	46.25	1175
39		40.88	1038	42.38	1076	45.25	1149	48.50	1232
47	4	45.50	1156	47.00	1194	49.88	1267	53.13	1350
48		52.00	1321	53.50	1359	56.38	1432	59.63	1515
49		55.00	1397	56.50	1435	59.38	1508	62.63	1591
57	5	57.25	1454	58.75	1492	61.63	1565	64.88	1648
58		63.38	1610	66.88	1699	69.75	1772	73.00	1854
59		69.13	1756	70.63	1794	73.50	1867	76.75	1949
68	6	78.75	2000	80.25	2038	83.13	2112	86.38	2194
69		83.25	2115	84.75	2153	87.63	2226	90.88	2308
78	7	92.13	2340	93.63	2378	96.50	2451	99.75	2534
79		97.38	2473	98.88	2512	101.8	2586	105.0	2667
88	8	105.5	2680	107.0	2718	109.9	2791	113.1	2873
89		111.5	2832	113.0	2870	115.9	2944	119.1	3025

Center to center with 1.13" length nipple. To match different center to centers, subtract the longest center to center that will fit needed center to center, divide by 2 and then add the nipple length.

Formula:
(needed center to center –
closest center to center from chart / 2)
+ 1.13
= nipple length needed

Example:
3500 needed center to center - 25
(25 – 24.13 / 2) + 1.13
= 1.57

Example:
3510 needed center to center - 25
(25 – 24.88 / 2) + 1.13
= 1.19

Overall nipple length can be divided between nipples to suit the application.

Minimum length required for each nipple is 1 1/8" for 1/2" NPT nipple and 1 3/8" for 3/8" NPT nipple.

Sizes above Length Code 28 cannot be mounted for shipping purposes.

Notes

NOTE: Taylor Valve reserves the right to change product designs and specifications without notice.

Taylor Valve Technology
Adaptive Industrial Solutions
sales@adaptiveind.com
(877) 818-5009

Precise.

Quality.

Reliable.

7/11/25