Pressure, Level & Temperature Transmitters & Transducers

Adaptive Industrial Solutions
sales@adaptiveind.com
(877) 818-5009

SELECTING A DIFFERENTIAL PRESSURE TRANSMITTER

Technical Note #7

A Differential Pressure (DP) sensor measures the difference between two pressures in a system. There are 2 process ports on a DP, a high side and low side. The process pressure being measured is connected to each side of the sensor. As the pressure on one side increases versus the other, a differential output is provided.

Understanding DP Terminology

There are many applications that require a differential pressure measurement. Differential pressure sensors can be used to measure: pressure drops across a filter, fluid levels in a pressurized vessel, flow rates across a restriction plate such as venturi or orifice plate, hydraulic pressure drop on test stands or anywhere a difference between two pressures is required.

When selecting a DP sensor there are many parameters to consider so as to insure proper, accurate, and safe operation. Selection of a DP transmitter requires a bit more detail than a gage pressure style. An incorrect selection can cause poor performance or possible catastrophic failure. Below are some examples of areas to consider when selecting your DP sensor as well as definitions typically used in the selection of these devices.

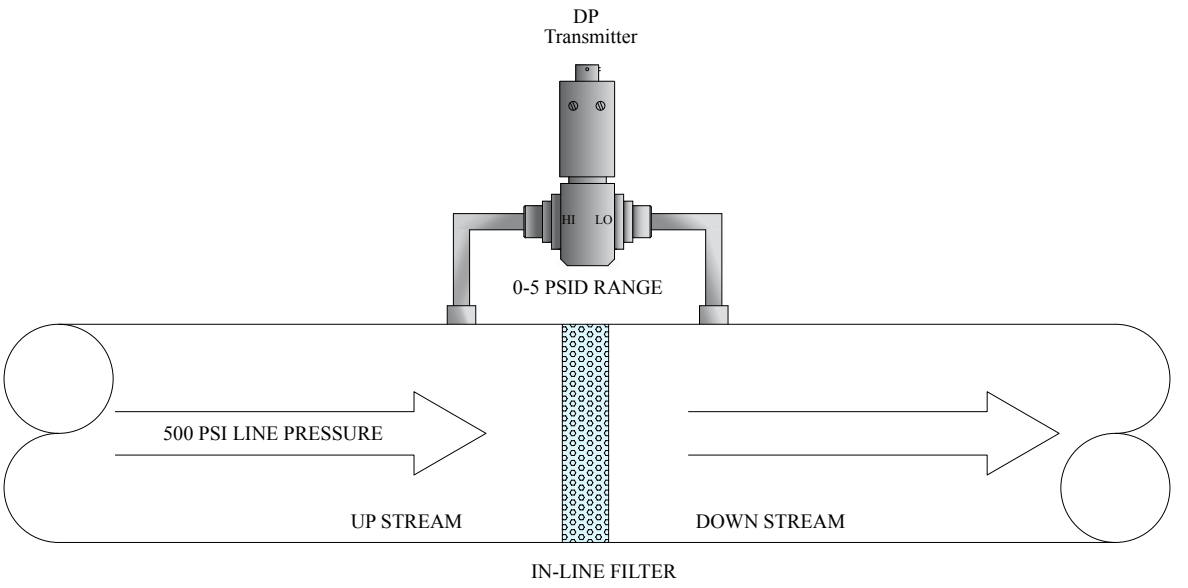

The drawing above shows a typical installation of a DP used to measure the pressure drop across an inline filter. The DP is plumbed in the system so the high side is on the “upstream” leg of the filter and the low side on the “downstream” of the filter. As the filter begins to plug, the high side line will increase in pressure and the low side will decrease.

1. “Line Pressure” or “Static Line Pressure” – In the drawing above, the line pressure would be the highest process pressure in the system that will act upon the DP sensor, both high and low ports at the same time. For example, the Static Line pressure in the image above is 500 PSI with no filter installed or with no restrictions. That is the maximum pressure that can be generated in this system's example.

2. Differential Pressure – The difference you want to measure between the high side and low side of the filter. In the example above this is 5 PSID.

3. Proof pressure – The maximum pressure one side of the DP can experience at any time. In the example above, if the filter became completely plugged, 500 PSI would be applied to the high side and 0 psi on the low side, this is then a 500 PSI proof pressure.

Adaptive Industrial Solutions
sales@adaptiveind.com
(877) 818-5009

SELECTING A DIFFERENTIAL PRESSURE TRANSMITTER

Technical Note #7

Every application is different, some may require very high line pressure with very low DP measurements, some may require very high proof pressure. For example, some applications may require 5,000 psi of line pressure, only 1 psi of differential measurement, and only 10 psi of proof pressure while a similar application may require 5000 psi of proof pressure.

These 3 pressure parameters are critical when selecting a DP. Some differential pressure transmitters can handle high line pressure but not low DP measurements. Some can handle high line pressure and low DP pressure but can't handle high proof pressure.

Below are 4 different DP sensors that GP:50 offers. The DP range, Line pressure and Proof are shown here to reflect the differences available. Some options may affect ratings, please consult the factory with your application details.

Model 114/214/314

- DP ranges from 0-500 PSID thru 0-20,000 PSID
- Line pressure ratings: 5X DP range or 22.5K PSI max
- Proof pressure ratings: 5X DP range or 22.5K PSI max



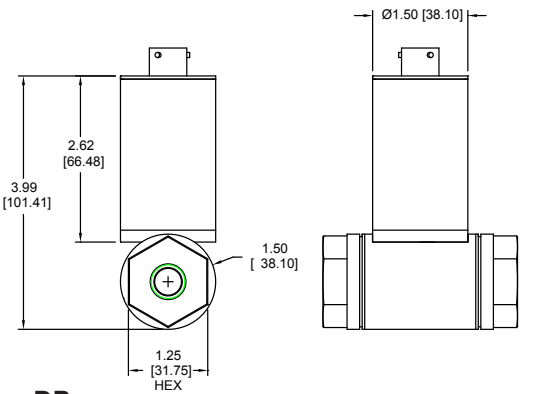

Ultra High Range DP

Model 115/215/315

- DP ranges from 0-30 PSID thru 0-7500 PSID
- Line pressure ratings from 0-2000 thru 0-10,000 PSI
- Proof pressure ratings of 10X DP range or 22.5K PSI max



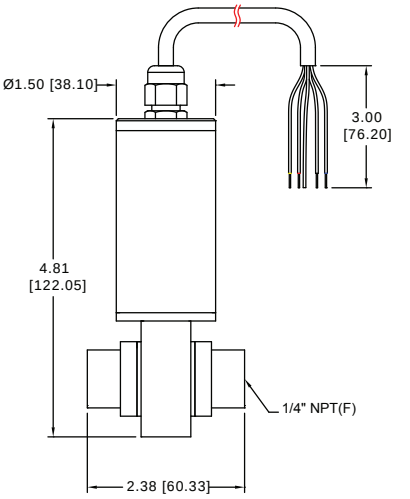

Medium to High Range DP

Adaptive Industrial Solutions
sales@adaptiveind.com
(877) 818-5009

SELECTING A DIFFERENTIAL PRESSURE TRANSMITTER

Technical Note #7

Model 216/316

- DP ranges from 0-2.5 Inches Water thru 0-100 PSID
- Line pressure ratings from 0-500 thru 0-5000 PSI
- Proof pressure ratings of 500 PSI max

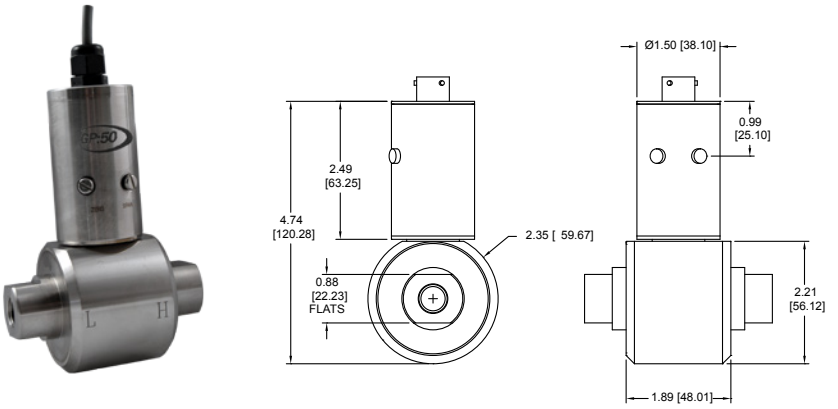

Ultra Low Range, High Line DP

Model 136/236/336

- DP ranges from 0-1 PSID thru 0-1,000 PSID
- Line pressure ratings: 1,000 PSI max
- Proof pressure ratings: 3X DP range (Higher options available)

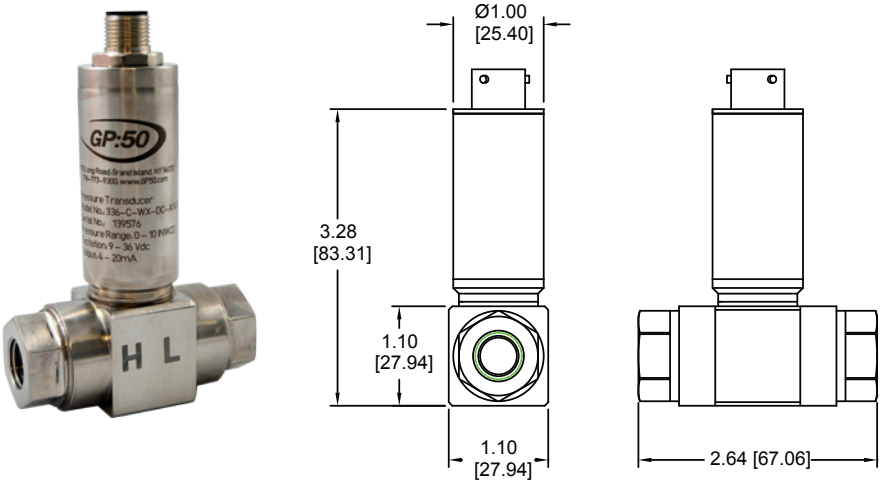

Low to Mid Range DP

The products above represent a small offering of our DP based products. With over 30 years of field experience, one of our qualified technical sales personnel can assist you with your application in selecting the best product to meet your specifc needs.

GP:50 LTD
Adaptive Industrial Solutions
sales@adaptiveind.com | (877) 818-5009