BARBEN ANALYTICAL

Application Note
Sugar Processing

Food & Beverage

Sugar is produced in 127 countries around the world. Global production totals 144 million tons with roughly 75% from sugar cane and 25% from sugar beet.

The Process

Sugar cane and sugar beet contain up to 20% sugar. The first stages extract the raw juice either through crushing the sugar cane or slicing up the sugar beets. The remaining raw juice is extracted from the plant material through a leaching process in a diffusion tower. The raw juice contains roughly 99% of the original sugar, plus various impurities. The juice is purified using multiple stages where milk of lime ($Ca(OH)_2$) and carbon dioxide (CO_2) are added. These two chemicals help to precipitate out impurities and neutralize any organic acids in the juice. The chemical reaction between the two additives creates calcium carbonate ($CaCO_3$). $CaCO_3$ binds with salts and impurities and precipitates out as a solid at the thickener and collection tanks. The reaction is a follows:

$$Ca(OH)_2 + CO_2 \rightarrow CaCO_3 + H_2O$$

Typically the sugar mill uses at least two stages of carbonation to purify the juice. Once complete the final filtered juice contains about 16% sugar. From this point the juice can be sent to the evaporators for thickening followed by crystallization into the end product. If white sugar is desired than another stage, sulfitation, is required. Sulfitation removes residual amino acids that would otherwise color the end product brown. Sulfitation is more common in sugar beet processing. Due to environmental concerns as well as additional costs sulfitation is slowly being replaced by filtration and ion exchange technology.

Measurement and control problems

pH measurement is one of the key parameters to controlling efficiency of the process. For this reason it is measured at the inlet and outlet of each stage within the process. At the exit of the pre-carbonation stage the reading is 8.5 - 9.0pH. Lime in the form of Calcium Oxide (CaO) is entrained with the juice entering the first carbonation. The water and lime drive the pH very high. The carbonated juice at the exit of the first carbonation is typically at 11 to 11.5pH. The addition of CO_2 will begin the precipitation of $CaCO_3$ which settles out in the thickener. Keeping the high pH level ensures maximum precipitation. The second carbonation is similar to first stage however the pH values are not quite so high. Temperatures throughout the Carbonation stages are kept very high from 70 - 100°C (158 - 212°F).

Sulfitation (sometimes referred to as “Third Saturation”) is an additional stage to alter the color of the final product. The addition of sulfur dioxide (SO_2) gas lowers the pH level to 7.0 - 8.0pH. In addition to lightening the color of the juice, sulfitation sanitizes the sugar and also helps uniform crystallization of the final product. Temperatures in the sulfitation process are similar to carbonation at 70 - 100°C (158 - 212°F).

The challenges to a pH measurement in all of these processes are well known:

- High suspended solids can plug porous reference junctions
- High temperatures shorten sensor life
- Elevated pH levels (especially in the first carbonation stages)
- Sulfides (H2S) from bacteria can poison the sensor

Sugar Mill Carbonation & Sulfitation

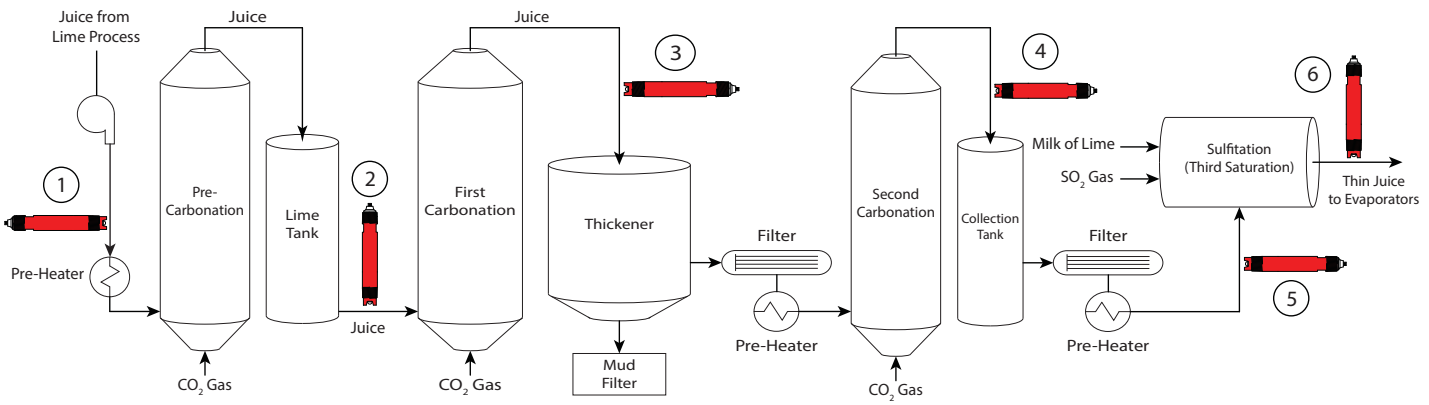

Sensor #	pH Reading	Temperature
1	5.5 - 6.0	76-82°C (169-180°F)
2	8.8 - 9.0	75-80°C (167-176°F)

Sensor #	pH Reading	Temperature
3	11.0 - 11.5	85-88°C (185-190°F)
4	8.7 - 8.8	95-100°C (203-212°F)

Sensor #	pH Reading	Temperature
5	8.5 - 9.0	74-80°C (165-176°F)
6	7.0 - 7.5	90-100°C (194-212°F)

Figure 1

AMETEK®

Application Note
Sugar Processing

The Solution

Sugar mills run on a seasonal schedule. Processing of sugar beets or cane begins immediately after harvest. These applications need reliable pH measurement for up to six months while the mill is in production. Barben Analytical Performance Series pH sensors offer reliable design that can be trusted through the entire campaign.

Plugging of the reference junction is the most common problem cited in sugar mill applications. The Barben Axial Ion Path® reference technology provides a great solution for these issues. The filtering design of the reference and large amount of electrolyte contained inside the sensor ensure that a strong signal path is maintained.

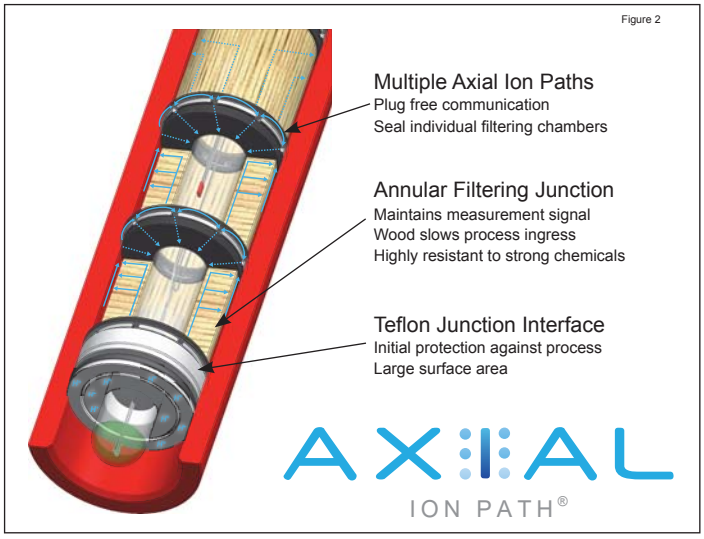

Barben sensors should be specified with “R” or “CR” high temperature glass electrodes for these applications. These electrodes are rated to 130°C (266°F) thus can survive direct measurement in the process. Sample line installations should be avoided as they delay the response time of the sensor and can clog up if not heated properly. Kynar (PVDF) should be specified as the sensor body material due to it’s chemical compatibility and integrity at elevated temperatures.

Retractable “hot tap” sensor such as the 547 are ideal for sugar mill processes. The 547 sensor uses a full port ball valve to isolate the sensor from the process when removal is required. Optional housings with flushing ports can be provided to cool the sensor and dissolve the sticky process further aid removal of the sensor from the process.

Barben pH sensors will easily connect to most analyzers in use today, Wiring diagrams for commonly available instruments can be found on www.BarbenAnalytical.com or via request from technical support.

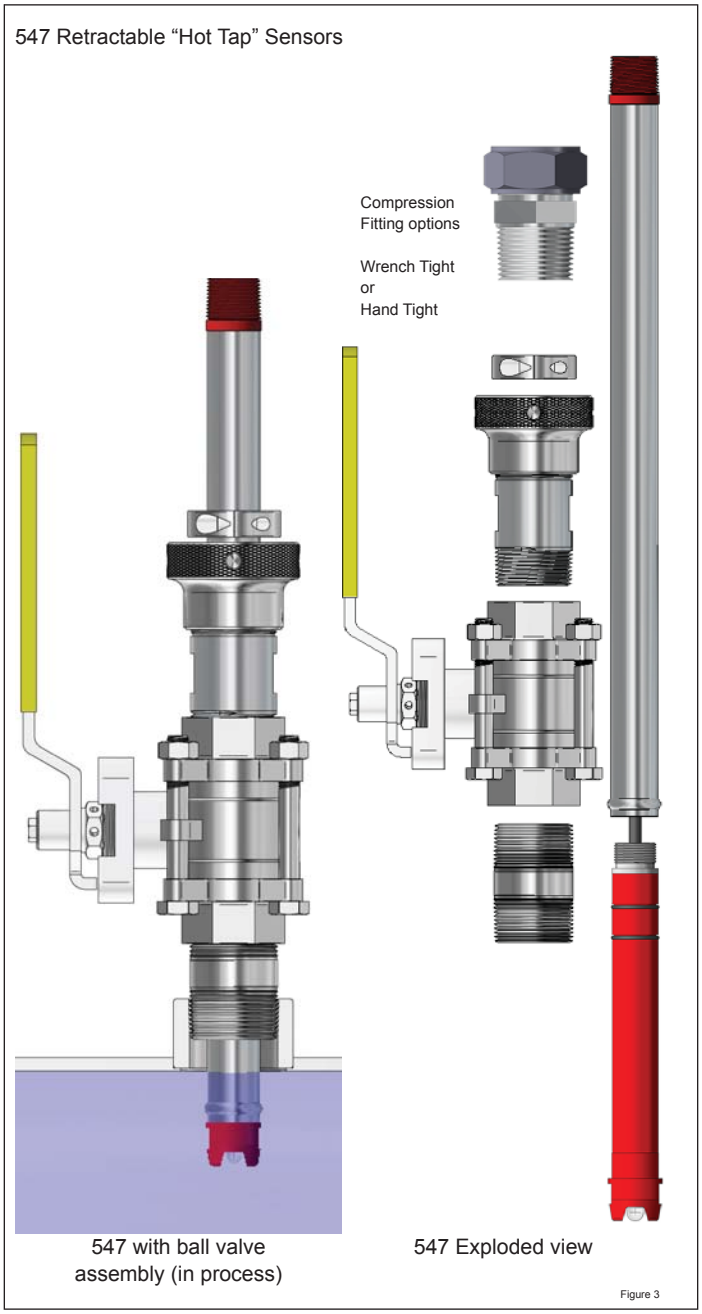

Barben Analytical reserves the right to make technical changes or modify the contents of this document without prior notice. We reserve all rights in this document and in the subject matter and illustrations contained within.

Kynar® is a registered trademark of Elf Atochem North America Inc.

© 2015, by AMETEK, Inc. All rights reserved • Sugar_Mill_AN_RevA • August, 2015