PUMP CONTROLLER

MODEL BD300



Models BD300
Pump Controller

OVERVIEW:

The Model BD300 Pump Controller is designed exclusively for use with the Blue Ribbon Birdcage® submersible level transmitter to provide multiple pump alternation for pumping stations and water municipalities. Featuring four programmable relay switches, a large 6 digit LED dual display, AC or DC power input, on board USB port and an isolated 24 Vdc power supply for use with any 4-20mA device. The BD300 is NEMA 4X and IP65 rated for the most demanding environments.

FEATURES:

- 0-20 mA, 4-20 mA, 0-5 V, 1-5 V, and ± 10V Inputs
- Large sunlight readable dual 6-digit display
- NEMA 4X, IP65 Front
- Universal 85-265 VAC, or12/24 VDC Input Power Models
- Front panel programming display and function keys
- Automatic round horizontal tank, or 32-point linearization
- Duplex and triplex pump control
- On board USB port for easy interface to Bulldog Pro programming software
- Free BULLDOG Pro Software for Operation, Monitoring, and Programming
- Standard 1/8 DIN (45mm x 92mm)

FIELD OPTIONS:

- NEMA 4X field enclosure with or without new light & horn option
- 4-Relay & Digital I/O Expansion Modules
- 1/4 DIN panel adapter (92mm x 92mm) Sunlight Readable Display Models

BR5SL-PC-003
REV-B

© 2015 Blue Ribbon Corp.
Adaptive Industrial Solutions
sales@adaptiveind.com | (877) 818-5009

DIMENSIONAL DRAWING

All dimensions are in inches (mm)

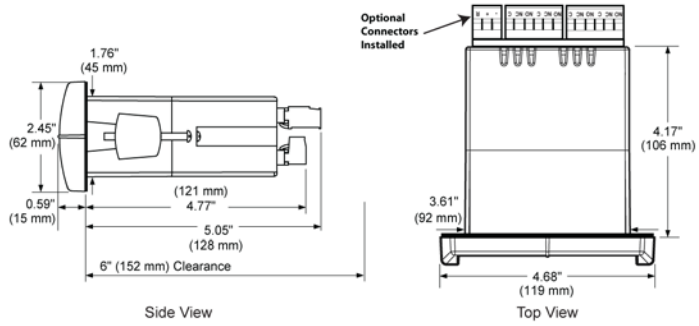

Notes:
1. Panel cutout required: 1.772" x 3.622" (45 mm x 92 mm)
2. Panel thickness: 0.040 - 0.250" (1.0 mm - 6.4 mm)
3. Mounting brackets lock in place for easy mounting
4. Clearance: Allow 6" (152 mm) behind the panel

USING THE BD300 24 VDC POWER SUPPLY:

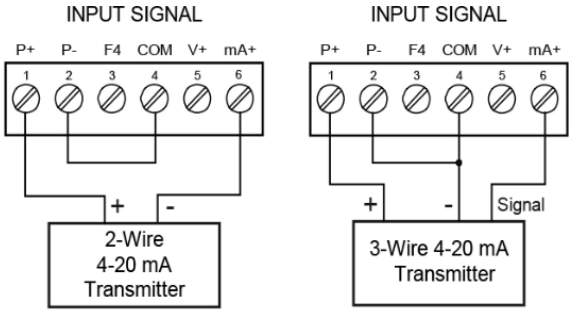

NEMA 4X FIELD ENCLOSURES:

Thermoplastic NEMA 4X enclosures are constructed for indoor or outdoor use.

CONNECTION DIAGRAM:

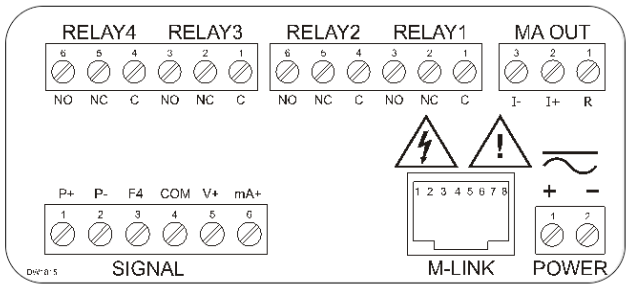



BD281

ACCESSORIES:

MODEL	DESCRIPTION
BDDRMK	DIN RAIL MOUNTING KIT FOR TWO EXPANSION MODULES
BDXM	4-RELAY EXPANSION MODULE
BDIO	4 DIGITAL INPUTS & 4 DIGITAL OUTPUTS MODULE
BDCCC	DUAL ANALOG OUTPUT EXPANSION MODULE
BDUSBSA	USB SERIAL ADAPTER
BD281	1/8 DIN ENCLOSURE

All specifications are for reference purposes only. In the interests of continuous product improvement, all specifications are subject to change without notice. Please contact Blue Ribbon Corporation for assistance with your application.

© 2015 Blue Ribbon Corp. **Adaptive Industrial Solutions**
sales@adaptiveind.com | (877) 818-5009