

viledon®

CORROSION PREVENTION FOR INCREASED OPERATIONAL EFFICIENCIES

WE PROVIDE SUPERIOR FILTRATION SOLUTIONS TO IMPROVE THE QUALITY OF LIFE.

YOUR GOALS, OUR TARGETS:

- Protect mission critical equipment.
- Reduce energy consumption and costs.
- Reduce labor and maintenance costs.
- Reduce carbon footprint.
- Increased media service life.

HOW WE DO IT?

- Total cost of ownership assessment.
- Customized chemical filtration solutions.
- Proprietary engineered media.

APPLICATIONS:

- Refineries
- Off-shore platforms
- Chemical processing

THE HONEYCOMB MATRIX (HM®) CARBON MEDIA SOLUTION

Vacuum truck services required to change carbon media can be costly, time-consuming, and just plain inconvenient. With **our proprietary HM® modules, we eliminate the need for a vacuum truck.**

DON'T HAVE AN HM® UNIT?

In addition to offering new customized systems, **most existing systems can be easily retrofitted to utilize our proprietary HM® modules.**

OTHER BENEFITS:

- **Improved site safety**
- **Reduced energy consumption**
- **Reduced maintenance downtime**

CALL US TO DISCUSS YOUR SOLUTIONS @ 800.542.2804

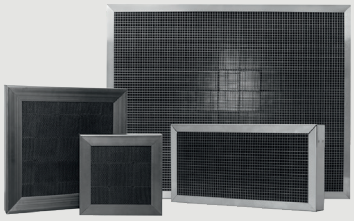

HM® MODULE

FREUDENBERG
FILTRATION TECHNOLOGIES

FREUDENBERG
INNOVATING TOGETHER

AT A GLANCE – VILEDON PRODUCT PORTFOLIO

CCP 104
1 2 3 4 7 9 10



CCP 108
1 2 3 4 7 9 10



CCP 210
1 2 3 4 7 9 10



CCP 310
1 2 3 5



CCP 510
5



CCP 610
5 8 11



CCP 810
1 2 4 8 11



CCP 830
1 2 3 4 8 11



CCP 840
1 2 5 8 11



CCP 903
6



Pellets are recommended for the contaminant gases as denoted in light blue. ●

1. Hydrogen sulfide (H_2S)
2. Sulfur dioxide (SO_2)
3. Other oxides of sulfur
4. Nitrogen oxides (NO_x)
5. Chlorine (Cl_2)
6. Ammonia (NH_3)
7. Formaldehyde (CH_2O)
8. Hydrocarbons
9. Mercaptans
10. Low molecular weight organic acids
11. Volatile organic compounds (VOCs)

This portfolio represents a small sample of your gas phase filtration needs. Please contact your Viledon® sales representative for customized solutions.

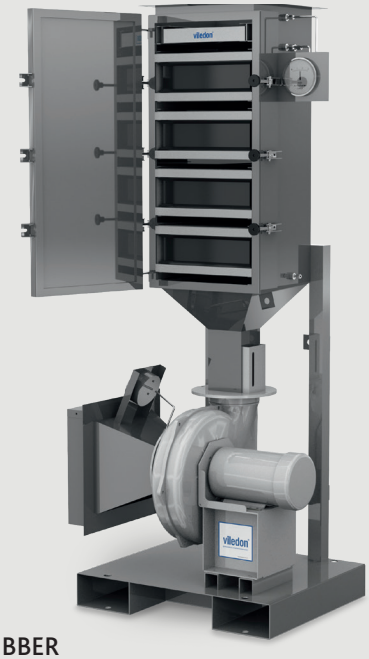

HM® SCRUBBER

Freudenberg Filtration Technologies, L.P.
Adaptive Industrial Solutions
sales@adaptiveind.com
(877) 818-5009

FREUDENBERG
INNOVATING TOGETHER

02–GP–624–May–2020–US

Viledon® is a registered and protected trademark of Carl Freudenberg KG.