GAS PRESSURE TEST GAUGES



Model BRGT-BV*

Model BRGT

MODEL BRGT

FEATURES:

The Model BRGT Series from Blue Ribbon Corporation is a combined utility gas pressure test gauge and valve body. Before gas is run into the system, it is charged with air. The gauge then indicates whether or not there is a leak present within the line. The valve body serves strictly as a bleed port. Series units support the reliable, cost-effective testing of gas line pressures within both commercial and residential applications.

*The Model BRGT-BV is available to order separately.

SPECIFICATIONS:

- Dial Size: 2″
- Measurement Range: 0-5 to 0-160 PSI (1/10# increments - only for 0-15)
- Connection: ¾″ FPT
- Accuracy: 3-2-3%, (ASME B40.1, Grade B)

PART NO.	RANGE
BRGT-5	0-5
BRGT-15	0-15
BRGT-30	0-30
BRGT-60	0-60
BRGT-100	0-100
BRGT-160	0-160

NOTE: BRGT-5 is a Capsule-style gauge. Refer to price list for correct pricing.

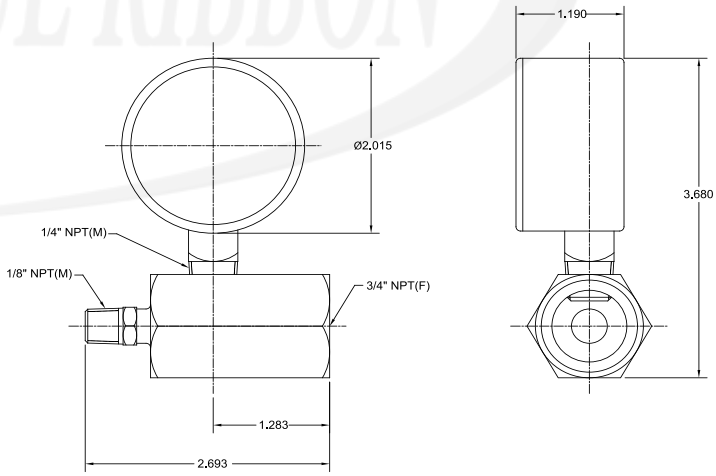

FRONT SIDE

BRGT15
2" GAS TEST GAUGE
3/4" NPT(F)

BR5SL-G-011
REV-D

© 2015 Blue Ribbon Corp.
Adaptive Industrial Solutions
sales@adaptiveind.com | (877) 818-5009