DIGITAL PRESSURE GAUGE



Model BRDG

MODEL BRDG

SPECIFICATIONS:

- Zero point calibration
- Automatic shutdown
- Min / Max display
- Overload Protection 1.5 X FS
- Accuracy: ±0.1 %FS
- Pressure Units: Bar, PSI, kPa, MPa, kg/cm^2, In Hg, Mbar, mm Hg
- Pressure Ranges: -1...0 bar to 0...1000 bar
- Pressure Ranges Absolute till 0 to 40 bar
- 10 point traceable calibration certificate
- Cast Aluminum epoxy painted case
- 1-year continuous operation when powered up from 2 x 1.5V AA
- 1 x Saft LS14500 3.6V Lithium AA battery
- Process Connections: ¼" BSP, ¼" NPT, ½" BSP, ½" NPT
- Display: 4-digit with 14mm high characters
- Storage: -4 to 185 °F (-20 to 85 °C)
- Ambient operating: -4 to 176 °F (-20 to 80 °C)
- Process Temperature Min and Max:
- -11 to 176 °F (-30 to 80 °C)

APPLICATIONS:

- Process Industries
- Hazardous process applications
- Industrial applications & Pumps
- Calibration & Lab testing

FEATURES:

- High accuracy and a 4-digit display
- Energy-efficient battery life of up to 1000 operating hours
- Dial Sizes: 2", 4"
- ATEX 2014/34/EU as per EN IEC 60079-0:2018 & 60079-11:2012
- Max / Min pressure measurement
- IP Protection: IP67 / NEMA 4
- Zero reset Button
- Piezoresistive pressure sensor with SS316L wetted parts
- Compensated Temperature -4 to 140 °F (-20 to 60 °C)
- Compliance to EN60079-0:2018 & EN60079-11:2012
- EX (intrinsically safe)
- Chemical seals with different wetted exotic materials like MONEL 400, HASTELLOY C 276 and INCONEL625/825 wetted parts depending upon process applications

ELECTRICAL DATA:

- Battery 3V, 2 X 1.5V AA
- Type CR2430 hazardous applications DG-Ex75
- Battery life up to 1000 hours when used continuously

MECHANICAL DATA:

- Materials in contact with media
- Pressure connection: AISI 316SS
- Diaphragm: SS316L All welded connection, NO O Ring
- Swivel Connection: SS316L

LC-DISPLAY:

- Dimensions: Width x Height: 27.8mm x 30.0mm
- Number of digits: 4 on LCD 14mm Digit Height
- Display Mode: Pressure
- Display Interval: 2/s

OTHER MATERIAL:

- Display Housing: Aluminum
- Front Glass: LEXAN® 163
- Pressure transducer oil filling: Silicone oil
- Swivel Connection: SS316L

© 2026 Blue Ribbon Corp.

Adaptive Industrial Solutions
sales@adaptiveind.com | (877) 818-5009

DIGITAL PRESSURE GAUGE

DIMENSIONAL DRAWING

All dimensions are in inches (mm)

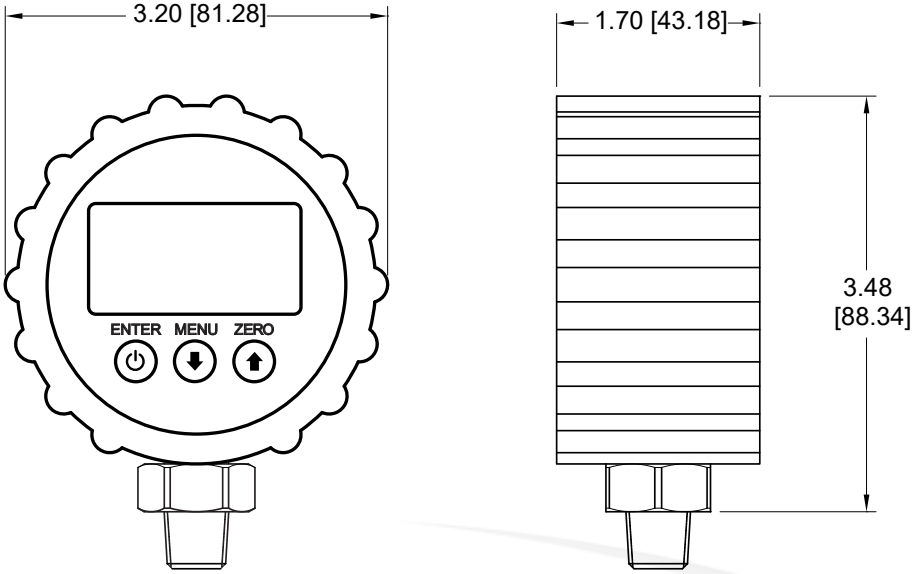

ORDERING GUIDE

Example: BRDG-30-2-A

BRDG Model Number	30 Dial Size	2 Connector Size	A Pressure Range
	3.0" - 30 4.0" - 40	4B - ¼" BSP 4 - ¼" NPT 2B - ½" BSP 2 - ½" NPT	See Table

RANGE	RANGE CODES
30/0 Hg Vac	A
30/0/15	CB
30/0/30	CC
30/0/60	CD
30/0/100	CE
30/0/150	CF
30/0/200	CG
30/0/300	CH
0/15 PSI	B
0/30 PSI	C
0/60 PSI	D
0/100 PSI	E
0/160 PSI	F
0/200 PSI	G
0/300 PSI	H
0/400 PSI	I
0/600 PSI	K
0/800 PSI	L
0/1000 PSI	M
0/1500 PSI	N
0/2000 PSI	O
0/3000 PSI	P
0/5,000 PSI	R
0/10,000 PSI	U
0/15,000 PSI	V
0/20,000 PSI	V2

All specifications are for reference purposes only. In the interests of continuous product improvement, all specifications are subject to change without notice. Please contact Blue Ribbon Corporation for assistance with your application.

© 2026 Blue Ribbon Corp.

Adaptive Industrial Solutions
sales@adaptiveind.com | (877) 818-5009