Compact Temperature Transmitter



810 SERIES

- Proven PT1000 platinum resistance sensor provides reliability, stability and unbeatable performance
- Standard temperature ranges from -22 °F to 302 °F (-30 °C to 150°C)
- 4 mA to 20 mA transmitter included
- 316 Stainless Steel housing
- CE compliant to suppress RFI, EMI, and ESD
- RoHS compliant

APPLICATIONS

- Mobile hydraulics
- Automotive
- Heat exchangers
- HVAC
- Transportation
- Refrigeration controls

SPECIFICATIONS		
Output signal	4 mA to 20 mA, 2-wire	
Temperature ranges	Standard ranges from -22 °F to 302 °F (-30 °C to 150°C)	
Accuracy	Measuring element	PT1000 Class A
	Temperature sensor	For °F: ±[1.8*(0.15 + 0.002 (t - 32) / 1.8)] For °C: ±(0.15 K + 0.002 I t I) per EN 60751
	Accuracy [1, 2]	± 0.80 °F (+- 0.45 °C)
Failure signal	Sensor burnout	≥ 21.0 mA
	Sensor short circuit	≤ 3.6 mA
Power requirement*	10 Vdc to 30 Vdc	
Environmental temperature affect	0.1% of span / 18 °F (10 °C)	
Load limitations	≤(Supply Voltage - 10 Volts)/0.023 A	
Wetted materials	316 Stainless Steel	
Housing material	316 Stainless Steel	
Ambient temperature	-40°F to 185 °F (-40°C to 85 °C)	
Storage temperature	-40°F to 185 °F (-40°C to 85 °C)	
Electromagnetic rating	CE compliant to EMC norm EN 61326 RFI, EMI and ESD protection	
Electrical protection	Reverse polarity, over-voltage and short circuit protection	
Max. operating pressure	3,915 psi (270 bar) [3]	
Environmental protection	IP67	

* Unregulated

[1] Maximum uncertainty calculated @ maximum span, maximum measurement temperature, and ambient temperature

[2] Maximum uncertainty includes Usensing element, Usensor measurement, Uoutput linearization

[3] Pressure rating may vary based on the process medium, temperature and flow rate

Thermowells are recommended for pressure, corrosive fluids and high velocity applications, see pages 46-48.

⚠ **WARNING:** This product can expose you to chemicals including Lead and Nickel, which are known to the State of California to cause cancer and birth defects or other reproductive harm. For more information go to www.P65Warnings.ca.gov

ORDERING INFORMATION						
SERIES	**810**					
TEMPERATURE RANGES	**-22/125**	-22 °F to 125 °F	**-22/302**	-22 °F to 302 °F	**0/200**	0 °F to 200 °F
	-22/250	-22 °F to 250 °F	**0/100**	0 °F to 100 °F	**0/300**	0 °F to 300 °F
	(L/H) Custom ranges available on request, specify low and high ranges (70 °F minimum span)					
ACCURACY	**1**	PT1000 Class A ±0.8 °F (±0.45 °C)				
OUTPUT SIGNAL	**1**	4 mA to 20 mA, 2-wire				
PROCESS CONNECTIONS	**2**	1/4″ NPT Male	**8**	1/2″ NPT Male		
ELECTRICAL CONNECTION	**25**	M12 x 1 (4-pin)				
STEM LENGTHS	**010**	1"	**030**	3"	**080**	8"
	020	2"	**040**	4"	**120**	12"
	025	2.5"	**060**	6"	**140**	14"
STEM DIAMETER	**6**	6 mm				

Please consult your local NOSHOK Distributor or NOSHOK, Inc. for availability and delivery information.

EXAMPLE

810 – -22/125 – 1 – 1 – 2 – 25 – 020 – 6

Series 810
Temperature range ..... -22 °F to 125 °F
Accuracy .....PT1000 Class A ±0.8 °F (±0.45 °C)
Output signal ..... 4 mA to 20 mA, 2-wire
Process connection ..... 1/4″ NPT Male
Electrical connection ..... M12 x 1 (4-pin)
Stem length .....2"
Stem diameter ..... 6 mm

810 Series Compact Temperature Transmitter

1/2" NPT

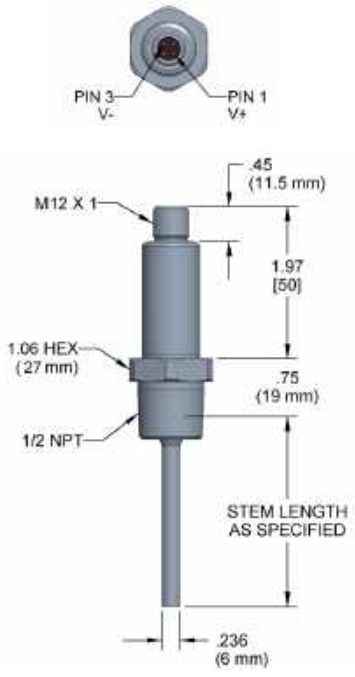

1/4" NPT

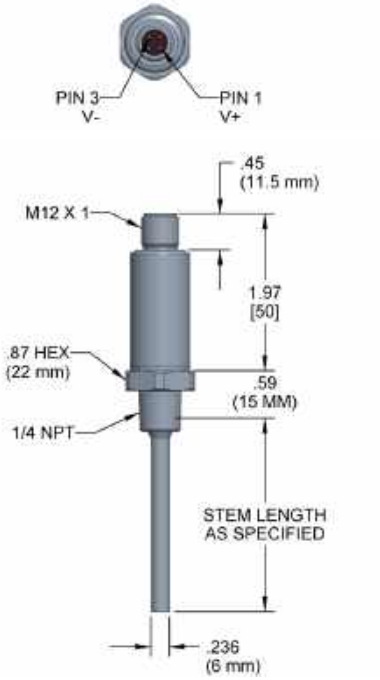

810 Series	4 mA to 20 mA	
CONNECTION TYPE (CODE)	V+	V-
M12 x 1, 4-Pin (25)	1	3

Load Limitations 4 mA to 20 mA output		
Vmin	=	10V + (.020 x RL)
RL	=	Loop resistance (Ω) RL = RS + RW
RS	=	Sensor resistance (Ω)
RW		Wire resistance (Ω)