BELL HOUSING GAS PRESSURE TEST GAUGES



Model BRGTB-5
2.5" Dial

Model BRGTB

MODEL BRGTB

FEATURES:

The Model BRGTB Series from Blue Ribbon Corporation is a combined utility gas pressure test gauge with bell housing body. Before gas is run into the system, it is charged with air. The gauge then indicates whether or not there is a leak present within the line. The bell housing body serves strictly as a bleed port. Series units support the reliable, cost-effective testing of gas line pressures within both commercial and residential applications.

SPECIFICATIONS:

- Dial Size: 2" Pressure Gauge
  - ▸ For 0-5 PSI Range, Gauge is 2.5" Dial
- Black Steel Case
- Measurement Range: 0-5 PSI, 0-30 PSI, and 0-60 PSI
- Connection: ½", ¾" & 1" FPT
- Accuracy: 3-2-3%, (ASME B40.1, Grade B)

PART NO.	CONNECTION	RANGE
BRGTB2-5	1/2"	0-5 PSI
BRGTB2-30	1/2"	0-30 PSI
BRGTB2-60	1/2"	0-60 PSI
BRGTB75-5	3/4"	0-5 PSI
BRGTB75-30	3/4"	0-30 PSI
BRGTB75-60	3/4"	0-60 PSI
BRGTB1-5	1"	0-5 PSI
BRGTB1-30	1"	0-30 PSI
BRGTB1-60	1"	0-60 PSI

(0-5 PSI has 1/10 of 1 PSI increments)

Drawing 1: 1/2" Unit

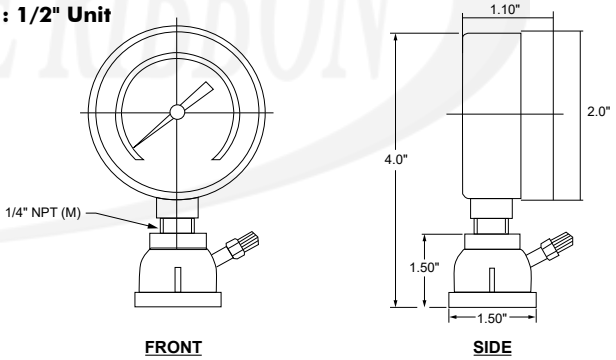

Drawing 2: 3/4" Unit

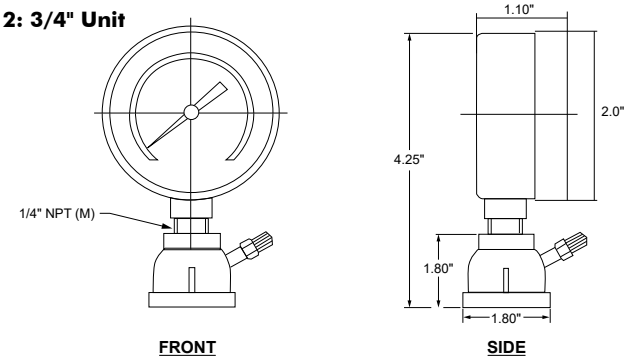

BR5SL-G-035
REV-B

© 2022 Blue Ribbon Corp. **Adaptive Industrial Solutions**
sales@adaptiveind.com | (877) 818-5009