Application Note
pH in Chlorine Dioxide Bleaching

Pulp & Paper: Bleach Plant

The bleaching of pulp stock is used by the mill to improve the brightness of fine paper. Strong oxidizing chemicals such as chlorine gas, oxygen, hydrogen peroxide, sodium hypochlorite, oxone, and chlorine dioxide are used to create pulp with the intended characteristics. Environmental and safety concerns have led to the reduction in use of chlorine gas and a greater reliance on Chlorine Dioxide (ClO_2). This process is often referred to as “Elemental Chlorine Free”, and is used in more than 50% of North American mills.

The Process

Chlorine Dioxide is introduced to the pulp in the D_0 tower where it reacts for approximately 1 hour. This first stage chemical reaction removes most of the lignin binding agents in the pulp without destroying the carbohydrates, which would weaken the final product. pH is maintained at a fairly low value (approx 2 - 4 pH) to insure a rapid chemical reaction. A higher pH level would consume more ClO_2 for a given degree of bleaching. Temperatures can vary between 45 to 85°C (113 to 185°F).

After bleaching in D_0 tower, the pulp is pumped through a washer. During the washing process ClO_2 is reclaimed and residual acids are removed to avoid carry-over to the following Eop stage. The Eop tower is where the remaining lignin is removed by dissolving in a high pH caustic solution. The caustic is reinforced with oxidizers in the form of hydrogen peroxide and oxygen. This stage is usually 10.5 - 11 pH to insure that all lignin is dissolved.

Additional “D” and “E” stages are used to further bleach the pulp to desired consistency. Usually a minimum of two D - E stages is required to deliver the desired brightness, with more used for finer or specialty papers. The % solids (density) is usually quite high, sometimes up to 15%. This minimizes water consumption use and increases the mill efficiency. Temperature is normally set at about 65 to 80°C (149 to 176°F).

Measurements and Control Problems

pH is controlled in the D towers to insure that the reaction conditions are ideal. Measurements are normally taken at the start and finish of each stage. pH is controlled in the E stages to minimize the consumption of caustic. ORP (redox) is often used in the wash stage between D and E states to insure that the CLO_2 has been removed. Efforts to use ORP to control ClO_2 in the D stage have proven to be difficult due to the non-linear behavior of ORP.

pH measurement in the bleaching process stages have proven to be particularly challenging. The high pulp densities (up to 15%) and the harsh chemistries are beyond the capabilities of most pH sensors. The typical pH sensor tends to require cleaning regularly and frequently, and few sensor reference cells are able to withstand the strongly oxidizing environment. Often pH sensors are not installed directly into the process but mounted downstream of extraction sample valves. This creates lag time between pH measurement and what is actually occurring in the process.

Pulp Mill Bleach Plant Process

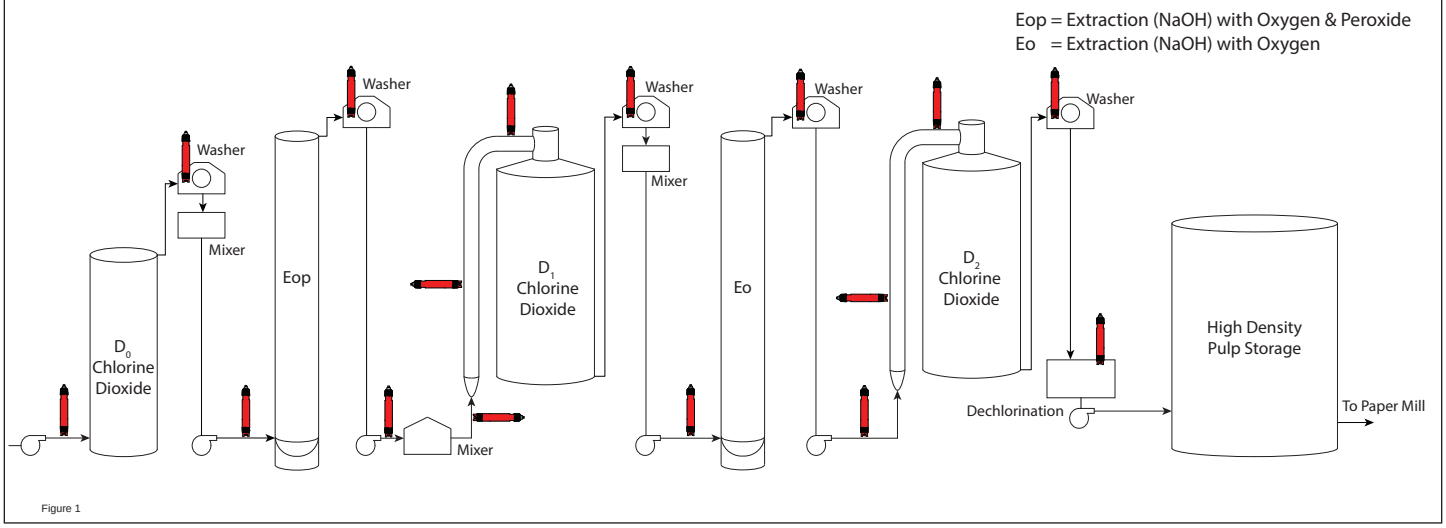

Figure 1

Application Note
pH in Chlorine Dioxide Bleaching

Solutions

The Barben Analytical Axial Ion Path® pH and ORP sensors have proven to be the best solution in Chlorine Dioxide. The Axial Ion Path® reference cell provides maximum resistance to oxidizer attack of the reference electrode Ag/AgCl element. As our Axial Ion Path™ reference cell does not use a polymerized electrode, there are no concerns about chemical compatibility or the need for a "special" sensor.

Figure 2

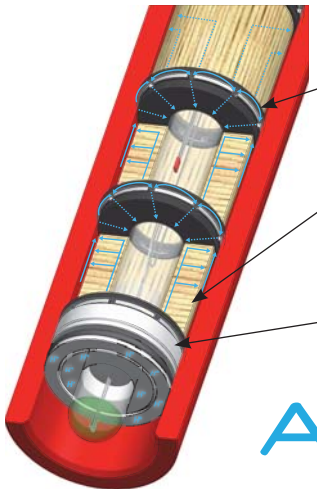

Multiple Axial Ion Paths
Plug free communication
Seal individual filtering chambers

Annular Filtering Junction
Maintains measurement signal
Wood slows process ingress
Highly resistant to strong chemicals

Teflon Junction Interface
Initial protection against process
Large surface area

AXIAL ION PATH®

Barben sensors should be specified with "R" or "CR" high temperature glass electrodes for these applications. Kynar (PVDF) should be specified as the sensor body material due to it's chemical compatibility and integrity at elevated temperatures. Metallic mounting hardware is typically titanium to withstand the process chemistry.

For measurements in the retention towers and their related piping we recommend the 547 cartridge style pH sensor. The Barben 547 sensor is a retractable "hot tap" design for installation directly into the process. The electrode tip should protrude at least 1/2" beyond the inside pipe wall to ensure that there is adequate flow past the sensor.

For measurements in washing vats and sample lines the Barben 546 threaded sensor is a good choice. This sensor uses 3/4" male NPT threads on both the front and rear of the sensor body thus providing some versatility on how it will be mounted.

Barben pH sensors will easily connect to most modern pH analyzers in use today, Wiring diagrams for commonly available instruments can be found on www.BarbenAnalytical.com or via request from technical support.

Installation Examples

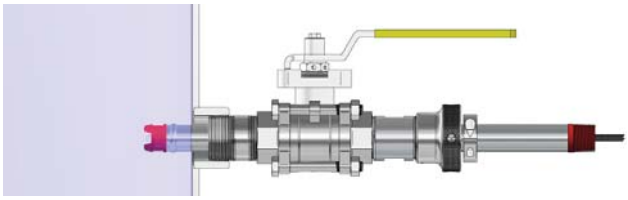

547 retractable pH Sensor mounted on side of vertical pipeline

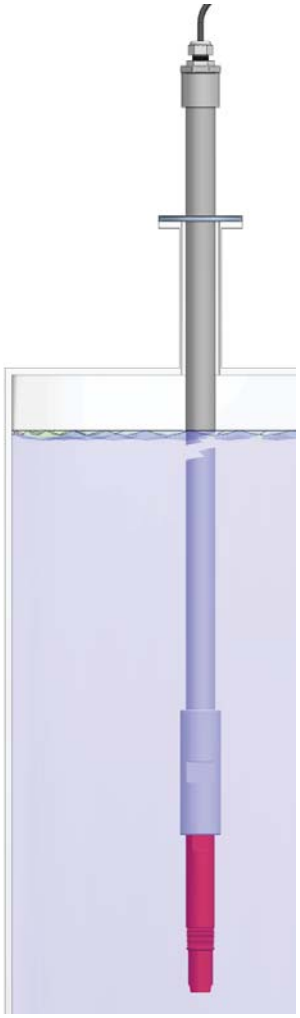

546 pH Sensor mounted on dip tube into a washer vat

Figure 3

Barben Analytical reserves the right to make technical changes or modify the contents of this document without prior notice. We reserve all rights in this document and in the subject matter and illustrations contained within.

Kynar® is a registered trademark of Elf Atochem North America Inc.

© 2015, by AMETEK, Inc. All rights reserved • Bleach_Plant_AN_RevA • August, 2015