LOW PRESSURE DIAPHRAGM GAUGE



Model BR500D

MODEL BR500D

FEATURES:

The Model BR500D Series from Blue Ribbon Corporation is a family of dry, non-fillable, diaphragm-based pressure gauges, designed to provide reliable economical measurements of pressures below 10 PSI. Available in brass and stainless steel construction to meet most application and media requirements.

SPECIFICATIONS:

- Accuracy:
  2½" Dial: 2.5%; (ASME B40.1, Grade B)
  4" and 4½" Dials: 1%; (ASME B40.1, Grade A)
- Dry, Non-fillable
- Working Pressure: 75% FSO
- Overpressure: 30% FSO
- Ambient/Process Temperature: -30 °F to 150 °F
- Enclosure: IP52
- Twist Lock Plastic Lens
- Black Steel Case
- Brass Internals and Connection
- Capsule-Type Diaphragm for Low-Pressure Measurements

RANGE	RANGE CODES	FIGURES	MINOR, INC.
100-0" WC Vac	**ZVAC**	10" WC	1"
55-0" WC Vac	**YVAC**	10" WC	1"
32-0" WC Vac	**XVAC**	4" WC	0.5"
0-15" WC	**W**	3" WC	0.2"
0-32" WC	**X**	10" WC	0.5"
0-55" WC	**Y**	10" WC	1"
0-100" WC	**Z**	10" WC	2"
0-3 PSI	**A1**	1 PSI	0.05 PSI
0-5 PSI	**AZ**	1 PSI	0.10 PSI
0-10 PSI	**BZ**	2 PSI	0-2 PSI

FIELD OPTIONS:

- Dial Sizes: 2½", 4" and 4½"
- Connection Sizes: ¼" NPT, ½" NPT on 4½" dial
- 304 Stainless Steel Case (4", 4½" Dial)
- Phenolic Case (4½" Dial)
- Front Flange (FF), Back Flange (BF), and U-Clamp (UC) mount

© 2015 Blue Ribbon Corp. **Adaptive Industrial Solutions**
sales@adaptiveind.com | (877) 818-5009

LOW PRESSURE DIAPHRAGM GAUGE

DIMENSIONAL DRAWING

All dimensions are in inches (mm)

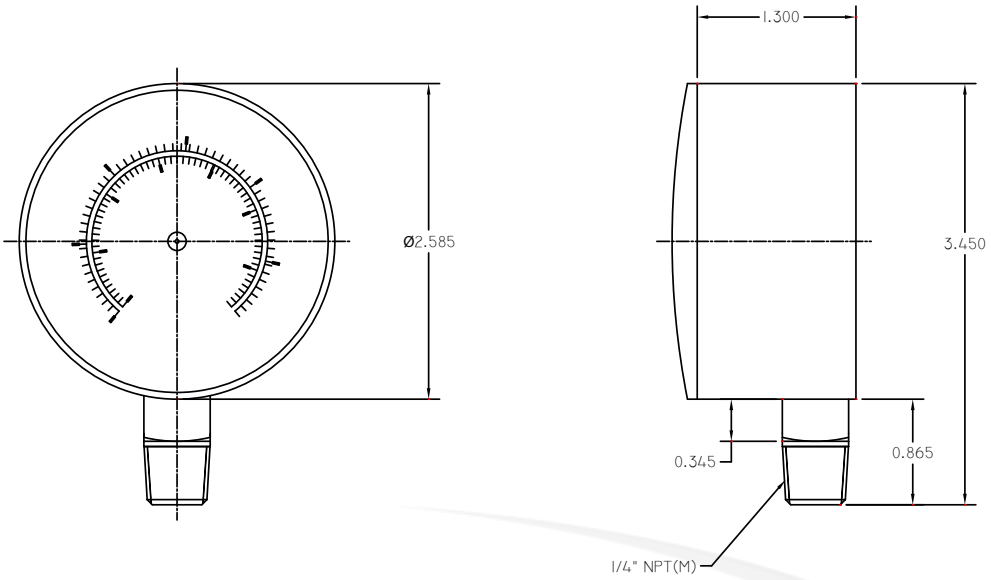

BR501D-254Y
63MMX1/4"NPT BOTTOM
0-55" W/C/OZ

ORDERING GUIDE

Example: BR501D452M

BR501	D	45	2	M
Model Number		**Dial Size**	**Connector Size**	**Pressure Range**
501 - bottom mount		2.5"	4 - ¼" NPT	See chart on page 1
502 - back mount		4"		
Fill Type		4.5"	4.5 - ½" NPT	
D - dry, non-filled				

Available in Back Flange (BF), Front Flange (FF), and U-Clamp (UC) mount

All specifications are for reference purposes only. In the interests of continuous product improvement, all specifications are subject to change without notice. Please contact Blue Ribbon Corporation for assistance with your application.

© 2015 Blue Ribbon Corp. **Adaptive Industrial Solutions**
sales@adaptiveind.com | (877) 818-5009