SPECIFICATION DATA

X-Series Flame Detector Sun Shade



DESCRIPTION

The sun shade mounts in-between the wall, pole surface or pole mount bracket and the Q9033 mounting arm providing the flame detector with protection from the sun and precipitation.

**Detector shown is mounted on a 4" (101.6 mm) pole using the 000609-026 4" Pipe Mount Bracket and U-Bolt Kit (not included with the 000003-067 Sun Shade)

Part Number: 000003-067

Material: 20ga 316 Stainless Steel

Weight: 5 pounds

WIRE DRAWING

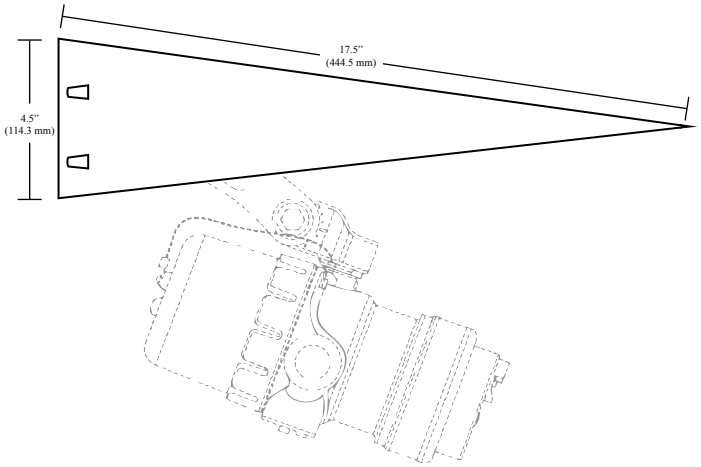

Specifications subject to change without notice.

All trademarks are the property of their respective owners.
© 2020 Detector Electronics Corporation. All rights reserved.

Det-Tronics manufacturing system is certified to ISO 9001—
the world's most recognized quality management standard.

Adaptive Industrial Solutions
Phone: (877) 818-5009
sales@adaptiveind.com
www.adaptiveind.com