HAZARDOUS LOCATION PRESSURE TRANSMITTER



Model BR240/340 AI/AN/AF
Hazardous Location Pressure Transmitter

Current Approvals:

Pending Approvals:

MODEL BR240/340 AI/AN/AF

FEATURES:

- Compact design for easier installation
- All stainless steel welded rugged construction
- ATEX & IEC Approvals
- Improved accuracy and thermally compensated
- Ranges 0 to 1 PSI thru 0 to 50K PSI (69 Mbar to 3447 Bar)
- NACE MR-01-75 compliant wetted parts available

APPLICATIONS:

- Natural Gas Compression
- Rig safety systems
- Well head control
- Control panels
- On-board transmission & engine monitoring

PRODUCT OVERVIEW:

Model 40 series from Blue Ribbon Corp incorporates over 25 years of oil field proven design in a 1" diameter package. The 40 series provides a rugged solution for hazardous approved areas, especially where space constraints are a concern. Its all-welded stainless steel design will provide years of reliable service in some of the harshest environments.

APPROVALS:

Currently Available:

- ATEX/IEC Intrinsically Safe, Zone 2, Flameproof*

*For details of available approvals go to:
Blue Ribbon Corp Certifications

BR5SL-TX-016
REV-H

© 2016 Blue Ribbon Corp. **Adaptive Industrial Solutions**
sales@adaptiveind.com | (877) 818-5009

HAZARDOUS LOCATION PRESSURE TRANSDUCER

DIMENSIONAL DRAWING

All dimensions are in inches (mm)

STANDARD
WIRING CONFIGURATION

PIN OR WIRE COLOR	MODEL 240	MODEL 340
A/1/RED	+EXC	+EXC/SIG
B/2/GRN	+SIG	CASE GND
C/3/WHT	CASE GND	N/C
D/4/BLK	-EXC/SIG	-EXC/SIG
E/5/BLU	N/C	N/C
F/6/BRN	N/C	N/C

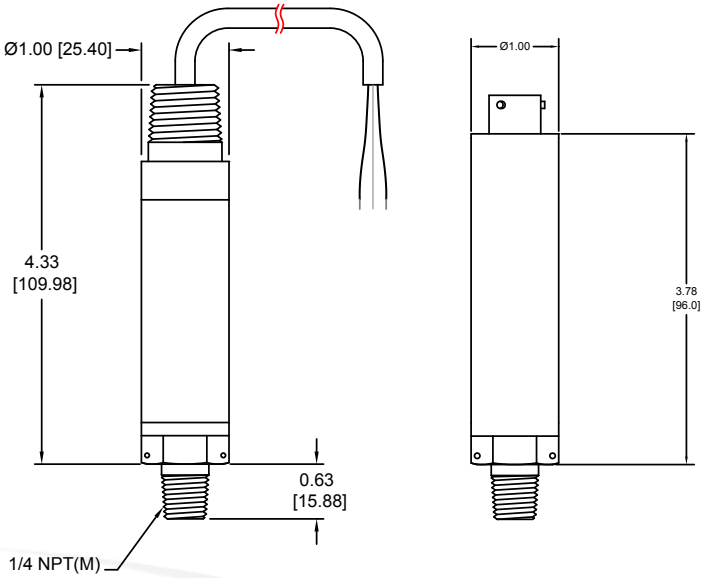

REFERENCE SPECIFICATIONS

ELECTRICAL

- **Excitation Voltage:**
  (Model 240) 9 to 28 Vdc
  (Model 340) 10 to 28 Vdc
- **Output Signal:**
  (Model 240) 0-5 Vdc, 1-5Vdc, and 0-10Vdc
  (Model 340) 4-20 mA
- **Electrical Connection:** ½" NPT (M) conduit w/6ft 18 AWG multi-conductor cable (options available)
- **Circuit Protection:** RFI, EMI, Reverse polarity protected
- **Response Time:** <4 ms

MATERIALS OF CONSTRUCTION

- **Wetted Parts:**
  ≤1000 PSI 316L SST
  >1000 PSI 17-4 PH SST, Inconel 718 available
- **Housing:** 316 stainless steel
- **Internal Fill:** Fomblin Oil Fill (May contain Silicone oil)

STATIC ACCURACY (BFSL): Non-Linearity @ +70 °F

- **Standard** ±0.20% FSO
- **Optional** ±0.10%
- **Zero & Span Balance:** ±1% FSO at +70 °F

MECHANICAL

- **Process Connection:** ¼" NPT (M), options available
- **Proof Pressure:** 2X FSO up to 20K PSI,1.2X > 20K PSI
- **Burst Pressure:** 5X FSO up to 20K PSI, 1.5X > 20K PSI
- **Approximate Weight:** 0.5 lb (0.23 kg) nominal, options may increase weight
- **Environmental:** Designed to meet IP67 (Some options may affect this. Consult factory if critical.)

PRESSURE RANGES

- 0 to 1 PSI thru 0 to 50K PSI, some options may affect range (PSIG, PSIS, PSIA, PSIV & compound ranges available)

THERMAL SPECIFICATIONS

- **Compensated Range:** 0 °F to +180 °F (-18 °C to +82 °C)
- **Operating Range:** -40 °F to +250 °F (-40 °C to +121 °C)
  (Hazardous Approval Area rating may affect limits)
- **Storage Ambient:** -65 °F to +250 °F (-53 °C to +121 °C)
- **Effect on Zero/Span:** ±1.0% FSO/100 °F

All specifications are for reference purposes only. In the interests of continuous product improvement, all specifications are subject to change without notice. Please contact Blue Ribbon Corporation for assistance with your application.

© 2016 Blue Ribbon Corp.
Adaptive Industrial Solutions
sales@adaptiveind.com | (877) 818-5009