DET-TRONICS

SPECIFICATION DATA

Eagle Quantum Premier®

Addressable Smoke (ASM) Module

Model EQ3760ASM

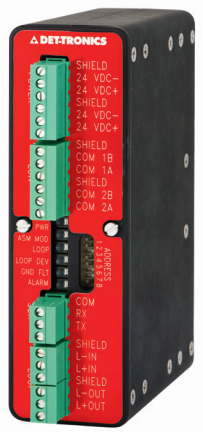

DESCRIPTION

The EQP Addressable Smoke (ASM) Module is designed to expand the input and output capability of the Det-Tronics Eagle Quantum Premier® system.

The ASM is an interface device designed to provide continuous and automated fire protection. It ensures system operation through supervision of system inputs/outputs and Local Operating Network/Signaling Line Circuit (LON/SLC) monitoring in the Controller.

The ASM is located directly on the LON of the EQP system, with a loop of up to 100 addressable devices tied into the ASM. This allows the EQP Controller to annunciate a fire alarm from either its own LON based I/O or from the ASM connected addressable detection loops (See Figure 2).

System status can be determined using the Eagle Quantum Safety System Software (S³), and the status indicators on the module.

FEATURES AND BENEFITS

- Expands the capabilities of the Det-Tronics Eagle Quantum Premier system.
- EQP Controller can support up to 10 ASM modules on a loop (this support is dependant on system configuration and logic within S³).
- Provides power and communications to 100 addressable devices.
- SIL2 capable certified by Exida.
- Intrinsically safe capability.
- Utilizes Apollo Discovery and XP95 devices.
- ASM alarm and fault conditions are logged in the EQP controller.
- LEDs for easy annunciation of power, faults and an active device on the loop.
- Monitors single addressable devices.
- Provides remote I/O capabilities via LON/SCL.
- DIN rail mounting.
- Plug-in wiring connectors.
- RFI and EMI hardened.

©2020 Detector Electronics Corporation

SPECIFICATIONS

Input Voltage 24 Vdc nominal, 18 to 30 Vdc.

Input Current 690 mA, maximum.

Loop Current 225 mA, maximum.

Power Consumption 11 Watts, maximum.

Wiring (Maximum)

	12 AWG	14 AWG	16 AWG	18 AWG
	4 mm²	2.5 mm²	1.5 mm²	0.75 mm²
Feet	15500	9800	6200	3900
Meters	4700	3000	1900	1200

Temperature Range Operating: –40°C to +85°C (–40°F to +185°F).
Storage: –55°C to +85°C (–67°F to +185°F).

Humidity Range 5 to 95% RH, non-condensing.

Certification:

FM / CSA: Class I, Div. 2, Groups A, B, C, D (T4).
Class I, Zone 2, Group II C (T4).

ATEX: Ⓔx II 3 G
Ex nA nC IIC T4 Gc
DEMKO 10 ATEX 150744X
Tamb = –40°C to +85°C.

Compliance with: EN 60079-0:2012
EN 60079-15:2010.

CE: The ASM Module can **not** be use for applications that fall within the scope of the CPD directive.

IECEx: ULD 10.0004X
Ex nA nC IIC T4 Gc
Tamb = –40°C to +85°C.

Compliance with: IEC 60079-0:2011
IEC 60079-15:2010.

SIL 2: IEC 61508: 2010 Parts 1-7
Certified SIL 2 Capable.

Dimensions See Figure 1.

Shipping Weight 2.7 lbs. (1.22 kg).

Supported Devices See Table 1 on page 3 for list of supported devices.

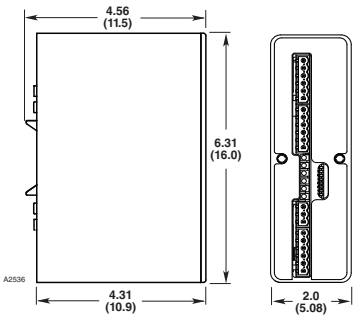

Figure 1—Dimensions of the ASM Module in Inches (Centimeters)

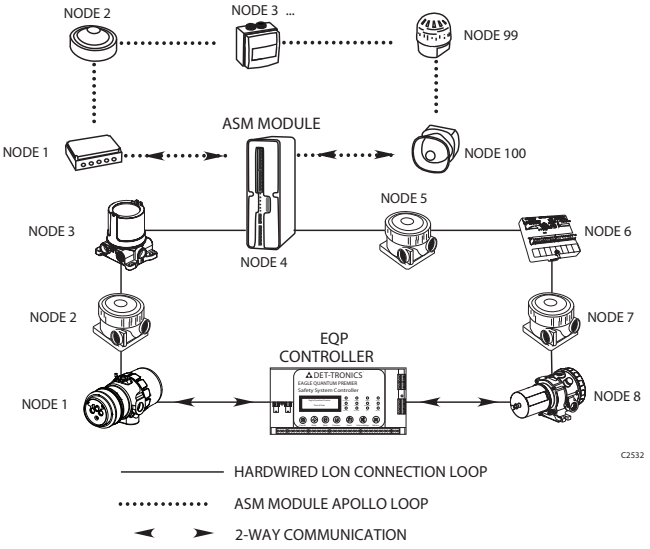

Figure 2—EQP LON with ASM Module Communication Loop

Specifications subject to change without notice.

All trademarks are the property of their respective owners.
© 2020 Detector Electronics Corporation. All rights reserved.

Det-Tronics manufacturing system is certified to ISO 9001—
the world's most recognized quality management standard.

Adaptive Industrial Solutions
Phone: (877) 818-5009
sales@adaptiveind.com
www.adaptiveind.com

Table 1—List of Supported Devices

DET-TRONICS PART NUMBER	APOLLO PART NUMBER	DEVICE NAME
000515-503	5800-400	Apollo Heat Detector, EU
000515-XXX	58000-400MAR	Apollo Heat Detector, EU Marine
000515-XXX	55000-440	Apollo Heat, IS **
000515-XXX	58000-400SIL	Apollo Heat Detector, SIL2
000515-553	58000-450	Apollo Heat Detector, FM
000515-501	58000-500	Apollo Ionization Smoke, EU
000515-XXX	58000-500MAR	Apollo Ionization Smoke, Marine
000515-XXX	58000-600MAR	Apollo Smoke, EU Marine Optical
000515-XXX	58000-600SIL	Apollo Smoke, SIL2 Optical
000515-XXX	58000-540	Apollo Ionization Smoke, IS **
000515-XXX	58000-640	Apollo Smoke, IS Optical **
000515-551	58000-550	Apollo Ionization Smoke, FM
000515-552	58000-650	Apollo Optical Smoke Detector, FM
000515-550	53546-022	Apollo Duct Smoke Det. Base EU
000515-XXX	58000-700MAR	Apollo Multisensor, EU Marine
000515-504	58000-700	Apollo Multisensor, EU
000515-XXX	58000-700SIL	Apollo Multisensor, SIL2
000515-554	58000-750	Apollo Multisensor, FM
000515-505	58000-300	Apollo Carbon Monoxide Detector, EU
000515-509	55000-847	Apollo Input / Output Unit, with Isolator
000515-512	58100-908	Apollo Manual Call, with Isolator
000515-513	58100-951	Apollo Manual Call, with Isolator, IP66
000515-517	55000-877	Apollo Beacon, Red
000515-557	55000-750	Apollo Isolator, FM
000515-559	55000-806	Apollo XP95A Priority Switch Monitor, FM
000515-560	55000-825	Apollo XP95A Sounder Control Module, FM
000515-561	55000-820	Apollo XP95A Input / Output Module, FM
000515-XXX	45681-210MAR	Apollo Mounting Base, Marine, FM
000515-XXX	45681-215	Apollo Mounting Base, IS
000515-XXX	45681-211MAR	Apollo Isolator Base, Marine, FM
000515-XXX	45681-242	Apollo Relay Base, FM, EU
000515-XXX	45681-211	Apollo Isolator Base, FM
000515-XXX	55100-940	Apollo Manual Call Point, Standard, Non-Isolated, Waterproof, IS **
000515-XXX	55000-960	Apollo Manual Call Point, Break Glass, Non-Isolated, Waterproof IS **
000515-XXX	55000-970	Apollo Manual Call Point, Push Button, Non-Isolated, Waterproof, IS **
000515-XXX	55200-910	Apollo Manual Call, Standard, Non-Isolated, Non-Waterproof, EU
000515-XXX	55200-950	Apollo Manual Call, Standard, Non-Isolated, Waterproof, EU
000515-XXX	58200-971MAR	Apollo Manual Call, Standard, Isolated, Waterproof, Marine
000515-XXX	58100-908SIL	Apollo Manual Call, Standard, Isolated, Non-Waterproof, SIL2
000116-180	53832-070	Apollo Remote Led 1 Gang Red
000515-510	55000-852	Apollo Sounder Control Unit
000515-515	55000-278	Apollo Sounder, 100dB, Red
000515-518	55000-293	Apollo Sounder / Beacon, with Isolator
000515-516	55000-274	Apollo Sounder, 100dB, Red, IP66
000515-XXX	55000-041	Apollo Sounder XP95a, Isolated, Non-Weatherproof, UL
000515-XXX	58000-005	Apollo Sounder Beacon Discovery, Non-Isolated, Non-Weatherproof, EU
000515-XXX	55000-298	Apollo Sounder Beacon XP95, Isolated, Waterproof, EU
000515-XXX	55000-374MAR	Apollo Sounder Beacon Discovery, Non-Isolated, Weatherproof, Marine
000515-XXX	58000-011	Apollo Sounder Beacon Discovery, Non-Isolated, Weatherproof, UL
000515-XXX	55000-398MAR	Apollo Sounder Beacon Discovery, Isolated, Weatherproof, Marine
000515-XXX	55000-182	Apollo Sounder Control, Din Rail, EU
000515-XXX	55000-181MAR	Apollo Sounder Control, Din Rail, Marine
000515-XXX	55000-803	Apollo I/O, Din Rail, EU
000515-XXX	55000-774MAR	Apollo I/O, Din Rail, Marine
000515-XXX	55000-588	Apollo 3 Channel I/O, Standard, EU
000515-XXX	55000-847SIL	Apollo I/O, Standard, SIL2
000515-XXX	55000-804	Apollo Relay Output, Din Rail, EU
000515-XXX	55000-771MAR	Apollo Relay Output, Din Rail, Marine
000515-511	55000-841	Apollo Switch Monitor Plus
000515-XXX	55000-822	Apollo Switch Monitor, Din Rail, EU
000515-XXX	55000-772MAR	Apollo Switch Monitor Plus, Din Rail, Marine
000515-XXX	55000-775MAR	Apollo Mini Switch Monitor, Mini, Marine
000515-XXX	55000-845	Apollo Zone Monitor, Standard, Eu
000515-XXX	55000-812	Apollo Zone Monitor, Din Rail, Eu
000515-XXX	55000-773MAR	Apollo Zone Monitor, Din Rail, Marine
000515-XXX	55000-859	Apollo Vac I/O, Standard
000515-XXX	55000-855	Apollo Is Protocol Translator, Sgl **
000515-XXX	55000-856	Apollo Is Protocol Translator, Dbl **
000515-XXX	29600-098	Apollo Is Galvanic Barrier **
000515-XXX	55000-721MAR	Apollo Isolator, Marine
000515-562	55000-765*	Apollo Mini Monitor Module, NA or Apollo Priority Mini Switch Monitor, FM

The device type depends on the priority switch setting on the device. ** Not FM approved as non-interfering
FM = FM Approved
EU = European Approvals

Table 1—List of Supported Devices, Cont.

UL BASIC FILE NO.	DET-TRONICS PART NUMBER	APOLLO PART NUMBER	DEVICE NAME
S5022	000515-507DET	45681-284DET	Isolating Base, FM
S24867	000515-605DET	56000-005DET	Pull Station, Addressable, Dual, UL Listed
S5022	000515-552DET	58000-650DET	Optical Smoke Detector, FM
S5053	000515-553DET	58000-450DET	Heat Detector, FM
S5022	000515-554DET	58000-750DET	Multisensor Smoke Detector, FM
S5022	000515-555DET	45681-210DET	Mounting Base, 4", FM
S5022	000515-556DET	45681-225DET	Mounting Base, 6", FM
S7003	000515-557DET	55000-750DET	Isolator, FM
S7003	000515-558DET	45681-211DET	Isolator Base, FM
S7003	000515-559DET	55000-806DET	Priority Switch Monitor, FM
S7003	000515-560DET	55000-825DET	Sounder Control Mod, FM
S7003	000515-561DET	55000-820DET	I/O Module, FM
S7003	000515-562DET	55000-765DET	Mini Monitor Module, FM
S7003	000515-620DET	55000-863DET	Relay Output Module, FM
	000515-557	55000-750	Isolator Module, FM

The device type depends on the priority switch setting on the device.
** Not FM approved as non-interfering
FM = FM Approved
EU = European Approvals