DIAPHRAGM SEAL

SERIES 4000



Series 4000

FEATURES:

The Series 4000 from Blue Ribbon Corporation are diaphragm seals or isolation devices used to provide economical protection of pressure sensing instrumentation from measured media. The Series is designed with a stainless steel diaphragm for small to medium instrumentation ranging from 30 to 2500 PSI. The Series 4000 provides ultimate protection for gauges and measuring instruments thru 4½" dial sizes in applications where space limitations are a concern.

TECHNICAL SPECIFICATIONS:

- **Housing:** 316 Stainless Steel
- **Diaphragm:** 316 Stainless Steel
- **Operating Pressure:** 30 to 2500 PSI
- **Instrument:** ¼" NPT
- **Process Connection:** ¼" NPT
- **Process Temperature:** -49 °F to +302 °F

Part #	Description
BR-D-4000	¼" NPT x ¼" NPT

© 2015 Blue Ribbon Corp.
Adaptive Industrial Solutions
sales@adaptiveind.com | (877) 818-5009

DIAPHRAGM SEAL

DIMENSIONAL DRAWING

All dimensions are in inches (mm)

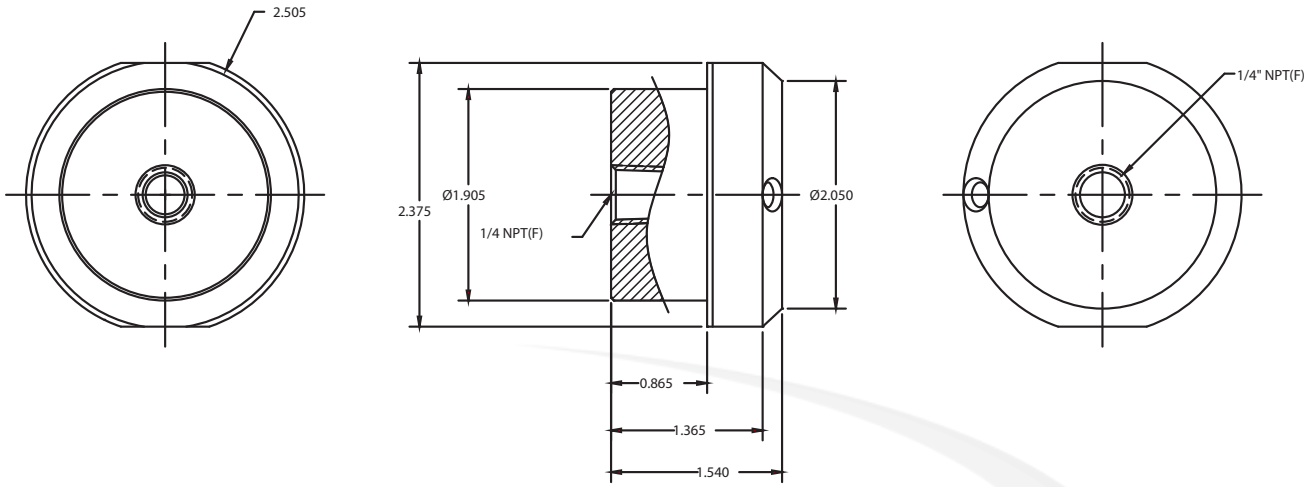

FRONT SIDE BACK

BR-D-4000
316SS
4000 SERIES

All specifications are for reference purposes only. In the interests of continuous product improvement, all specifications are subject to change without notice. Please contact Blue Ribbon Corporation for assistance with your application.

© 2015 Blue Ribbon Corp.

Adaptive Industrial Solutions
sales@adaptiveind.com | (877) 818-5009