BLUE RIBBON

BACK FLANGED GAUGE SERIES



Model BR661D

MODEL BR660

FEATURES:

The 660 gauge series from Blue Ribbon Corp. is a heavy duty, accurate, and highly reliable gauge for the mechanical, commercial, and industrial markets. The cast aluminum case and integral back flange are designed to ensure the model 660 will withstand the most rigorous environments.

SPECIFICATIONS:

- Dial Size: 4 ½"
- Connection Sizes:
  Lower (M) NPT ¼" and ½"
  Lower Back NPT ¼" and ½"
- Black Aluminum Cast Case w/integral back flange for surface mounting
- Brass Socket and Internals
- 304 SS Bezel
- Safety Glass Lens
- Micrometer Adjustable Pointer
- White Aluminum Dial, Black Numerals
- Accuracy: ±0.5%; (ASME B40.1, Grade 2A)
- Max Temp: 250 °F

RANGE	RANGE CODES	MAJOR	MINOR
30" HG VAC	A	5" HG	2" HG
30/0/30	CC	5 PSI	1 PSI
30/0/100	CE	10 PSI	1 PSI
30/0/160	CF	25 PSI	2.5 PSI
0/15	B	2.5 PSI	0.25 PSI
0/30	C	5 PSI	1 PSI
0/60	D	10 PSI	1 PSI
0/100	E	10 PSI	1 PSI
0/160	F	20 PSI	2 PSI
0/200	G	20 PSI	2 PSI
0/300	H	50 PSI	5 PSI
0/400	I	50 PSI	5 PSI
0/500	J	50 PSI	5 PSI
0/600	K	50 PSI	5 PSI

APPLICATIONS

- HVAC
- Plumbing
- Refrigeration
- Steam Heated Processes*

*NOTE: A pigtail siphon should always be used when installed in steam service.

BR5SL-G-017
REV-B

© 2018 Blue Ribbon Corp.

Adaptive Industrial Solutions
sales@adaptiveind.com | (877) 818-5009

DIMENSIONAL DRAWING

All dimensions are in inches (mm)

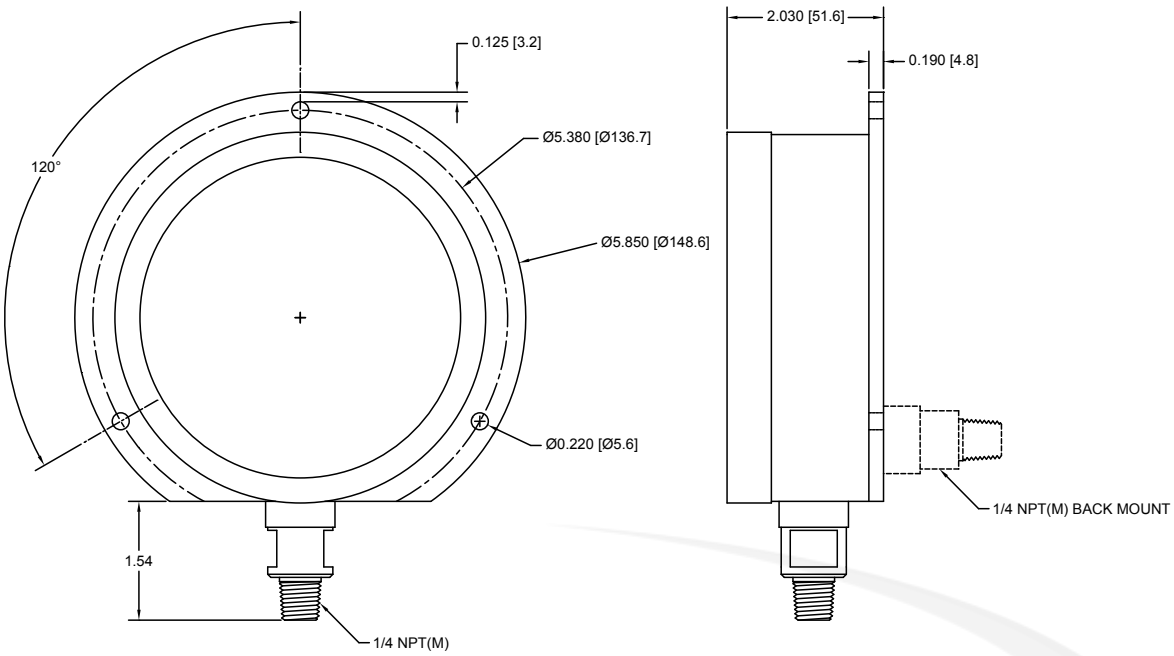

ORDERING GUIDE

Example: BR661D454F

BR661	D	45	4	F
Model Number		**Dial Size**	**Connector Size**	**Pressure Range**
661 - bottom connect **662 - back connect**		4.5" - 45	4 - ¼" NPT	See chart on page 1
Fill Type				
D - dry, non-filled				

All specifications are for reference purposes only. In the interests of continuous product improvement, all specifications are subject to change without notice. Please contact Blue Ribbon Corporation for assistance with your application.

© 2018 Blue Ribbon Corp.

Adaptive Industrial Solutions
sales@adaptiveind.com | (877) 818-5009