Flow-Through Annular Style



TYPE 40

- Process liquid flowing through the pipe exerts pressure onto a flush-mounted flexible inner cylinder containing clean, captive liquid; completely isolating instrumentation from the process flow and preventing plugging
- Can be used for remote mounting of pressure instrument(s) with capillary
- Instrumentation can be removed for calibration, repair or replacement without interrupting the process flow
- Integral design prevents accidental breakage
- Can be used with a variety of process conditions in many applications
- Eliminates clogging typically associated with diaphragm seals used in viscous fluid applications which can lead to inaccurate pressure readings
- Assembly flanges ASME B16.1 Class 150, 2" to 10"

APPLICATIONS

- Slurries
- Heavy sludges
- Chemical - synthetic polymers
- Diffusers - flow measurement
- Abrasive media

SPECIFICATIONS

Seal type	Inline flanged with sleeve diaphragm			
Instruments	**Type**	**Size**	**Minimum Pressure**	**Maximum Pressure**
	Gauges	2-1/2″ to 6″	0 psig to 30 psig	0 psig to 285 psig
	Transducers	-	0 psig to 30 psig	0 psig to 285 psig
	Switches	-	0 psig to 30 psig	0 psig to 285 psig
Upper housing	Type	Non-continuous duty		
	Connections	1/4″ NPT, 1/2″ NPT		
	Materials	Polyurethane enamel coated Steel, 316 Stainless Steel		
Diaphragm	Size	Sleeve style per ring size		
	Materials	NBR, FKM, EPDM, PTFE (Other materials available on request)		
Flange materials	Connections	Flanged, Class 150, 2″ through 10″		
	Materials	Polyurethane enamel coated Steel, 316 Stainless Steel		
Bolting		Zinc-plated Steel, optional Stainless Steel		
Operating temperature		-30 °F to 140 °F, based on materials of construction and fill fluid		

⚠ **WARNING:** This product can expose you to chemicals including Lead and Nickel, which are known to the State of California to cause cancer and birth defects or other reproductive harm. For more information go to www.P65Warnings.ca.gov

ORDERING INFORMATION								
TYPE	**40**	Annular Ring	**40BT**	Bolt-Through Annular Ring				
INSTRUMENT CONNECTION SIZES	**02**	1/4″ NPT	**04**	1/2″ NPT				
HOUSING MATERIALS	**C**	Carbon Steel	**S**	316 Stainless Steel				
DIAPHRAGM MATERIALS	**B**	NBR	**V**	FKM	**T**	PTFE	**E**	EPDM
PIPE SIZES	**16**	2″ Pipe	**32**	4″ Pipe	**48**	6″ Pipe	**80**	10″ Pipe
	24	3″ Pipe	**40**	5″ Pipe	**64**	8″ Pipe		
FLANGE MATERIALS	**C**	Carbon Steel	**S**	316 Stainless Steel				

Please consult your local NOSHOK Distributor or NOSHOK, Inc. for availability and delivery information.

EXAMPLE

Type 40
Instrument connection size ..... 1/4″ NPT
Housing material ..... Carbon Steel
Diaphragm material ..... NBR
Pipe size ..... 2″ pipe
Flange material ..... Carbon Steel

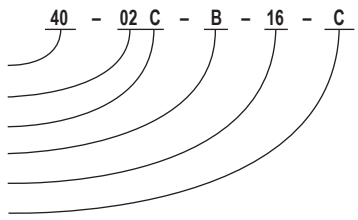

Type 40

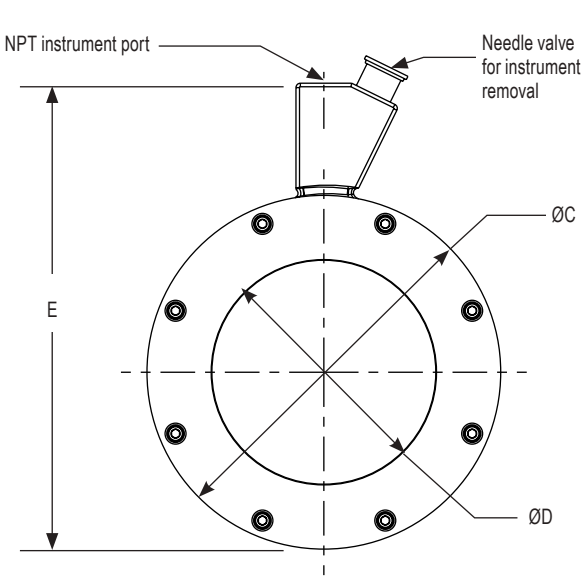

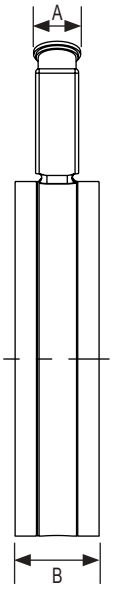

	NOMINAL PIPE SIZE						
	2"	**3"**	**4"**	**5"**	**6"**	**8"**	**10"**
A	0.76" (19 mm)	0.76" (19 mm)	0.76" (19 mm)	0.76" (19 mm)	0.76" (19 mm)	0.76" (19 mm)	0.76" (19 mm)
B	2" (51 mm)	2" (51 mm)	1-1/2" (38 mm)	1-1/2" (38 mm)	1-1/2" (38 mm)	1-1/2" (38 mm)	1-1/2" (38 mm)
C	4-7/32" (107 mm)	5-15/32 (139 mm)	6-9/32" (160 mm)	7-9/16" (192 mm)	8-7/16 (214 mm)	10-5/8" (270 mm)	12-13/16" (325 mm)
D	2" (51 mm)	3" (76 mm)	4" (102 mm)	5" (127 mm)	6" (152 mm)	8" (203 mm)	10" (254 mm)
E	7.18" (182 mm)	8.44" (214 mm)	9.27" 235 mm)	10.53" (267 mm)	11.40 (289 mm)	13.60" (345 mm)	15.77" (400 mm)