LEAD FREE LIQUID FILLED PRESSURE GAUGE



Model BRLF201L

MODEL BRLF200

FEATURES:

The Model BRLF200 Lead Free Liquid Filled Pressure Gauge from Blue Ribbon Corporation is an accurate, bottom connected, liquid-filled pressure gauge. Its lead free construction allows it to be specified within drinking water pump, pipeline and filtration system installations, or anywhere that the mitigation of lead contamination risk is a concern.

SPECIFICATIONS:

- Lead Free Brass Internals and Connection
- Lead Free Phosphor Bronze Bourdon Tube
- Dial Sizes: 1½", 2", 2½", 4", and 6"
- Glycerine fill standard
- Accuracy:
  1½" and 2" Dial Sizes: 2%
  2½" Dial: 1.6% (ASME B40.1, Grade A)
  4" and 6" Dial Sizes: = 1% (ASME B40.1, Grade 1A)
- Connection Sizes:
  1/8" (M) NPT on 1½" and 2"
  ¼" (M) NPT on 2", 2½", and 4"
  ½" (M) NPT on 4" and 6"
- Dual Scale: PSI & BAR
- Ambient Temperature:
  Filled: 0 °F to +150 °F
  Dry: -30 °F to +150 °F
- Enclosure: IP65

FIELD OPTIONS:

- Single Scale (PSI)
- Available in Dry
- Front Flange (FF), Back Flange (BF), and U-Clamp (UC) mount
- Alternate fills available

RANGE	RANGE CODES	MAJOR, INC.	MINOR, INC.
30/0" VAC	A	5	0.5
30/0/15	CB	5	0.5
30/0/30	CC	10	1
30/0/60	CD	10	1
30/0/100	CE	20	2
30/0/150	CF	20	2
30/0/300	CH	50	10
0/15	B	2	0.2
0/30	C	5	0.5
0/60	D	10	1
0/100	E	20	2
0/160	F	20	2
0/200	G	40	4
0/300	H	50	5
0/400	I	50	5
0/500	J	100	10
0/600	K	100	10
0/800	L	100	10
0/1000	M	200	20
0/1500	N	200	20
0/2000	O	400	50
0/3000	P	500	50
0/4000	Q	500	50
0/5000	R	1000	100
0/6000	S	2000	200
0/10,000	U	2000	200
0/15,000	V	2000	200

© 2015 Blue Ribbon Corp. **Adaptive Industrial Solutions**
sales@adaptiveind.com | (877) 818-5009

LEAD FREE LIQUID FILLED PRESSURE GAUGE

DIMENSIONAL DRAWING

All dimensions are in inches (mm)

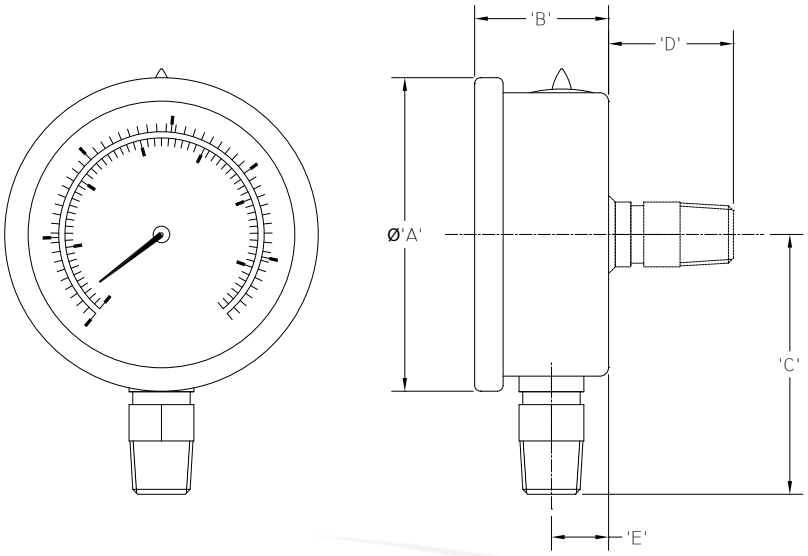

BR200
FILLABLE GAUGE

DIAL SIZE	'A'	'B'	'C'	'D'	'E'
Ø1.50	1.85	1.08	1.58	0.74	0.9
Ø2.00 (1/8)	2.25	1.155	2.15	0.91	0.585
Ø2.00 (1/4)	2.25	1.155	2.165	0.935	0.585
Ø2.50	2.675	1.16	2.185	1.22	0.458
Ø4.00 (1/4)	4.29	1.4	3.2	1.256	0.703
Ø4.00 (1/2)	4.29	1.4	3.24	1.293	0.703
Ø6.00	6.40	1.93	4.10	1.15	0.56

ORDERING GUIDE

Example: BRLF201L204F

BRLF201	L	20	4	F
Model Number		**Dial Size**	**Connector Size**	**Pressure Range**
201 - bottom connect		1.5" - 15	8 -⅛" NPT	See chart on page 1
202 - back connect		2.0" - 20	4 - ¼" NPT	
Fill Type		2.5" - 25	2 - ½" NPT	
D - dry, non-filled		4" - 40		
L - Liquid, glycerine filled		6" - 60		

Available in Back Flange (BF), Front Flange (FF), and U-Clamp (UC) mount

All specifications are for reference purposes only. In the interests of continuous product improvement, all specifications are subject to change without notice. Please contact Blue Ribbon Corporation for assistance with your application.

© 2015 Blue Ribbon Corp. **Adaptive Industrial Solutions**
sales@adaptiveind.com | (877) 818-5009